AFTER-SALE
TECHNICAL DEPARTMENT

REPAIR MANUAL N° 810

• VOLUME 2

SEPTEMBER 1975

GS VEHICLES

FIRST SECTION : REMOVAL and FITTING

SECOND SECTION : RECONDITIONNING

THIRD SECTION : ELECTRICAL SYSTEM

FOURTH SECTION : BODYWORK

Manual 810-2

SOCIETE ANONYME AUTOMOBILES CITROEN
S.A. AU CAPITAL DE [illegible] F - Registre des articles 118 à 160 de la loi sur les Societes Commerciales
[illegible] - SIRET 642 050 199 - 00016
SIEGE SOCIAL [illegible] QUAI ANDRE CITROEN 75747 PARIS CEDEX 15 - TELEPHONE 578 - 61 - 61

AFTER-SALE
TECHNICAL DEPARTMENT

REPAIR MANUAL N° 810

VOLUME 2

SEPTEMBER 1975

GS VEHICLES

FIRST SECTION : **REMOVAL and FITTING**

SECOND SECTION : **RECONDITIONNING**

THIRD SECTION : **ELECTRICAL SYSTEM**

FOURTH SECTION : **BODYWORK**

Manual 810-2

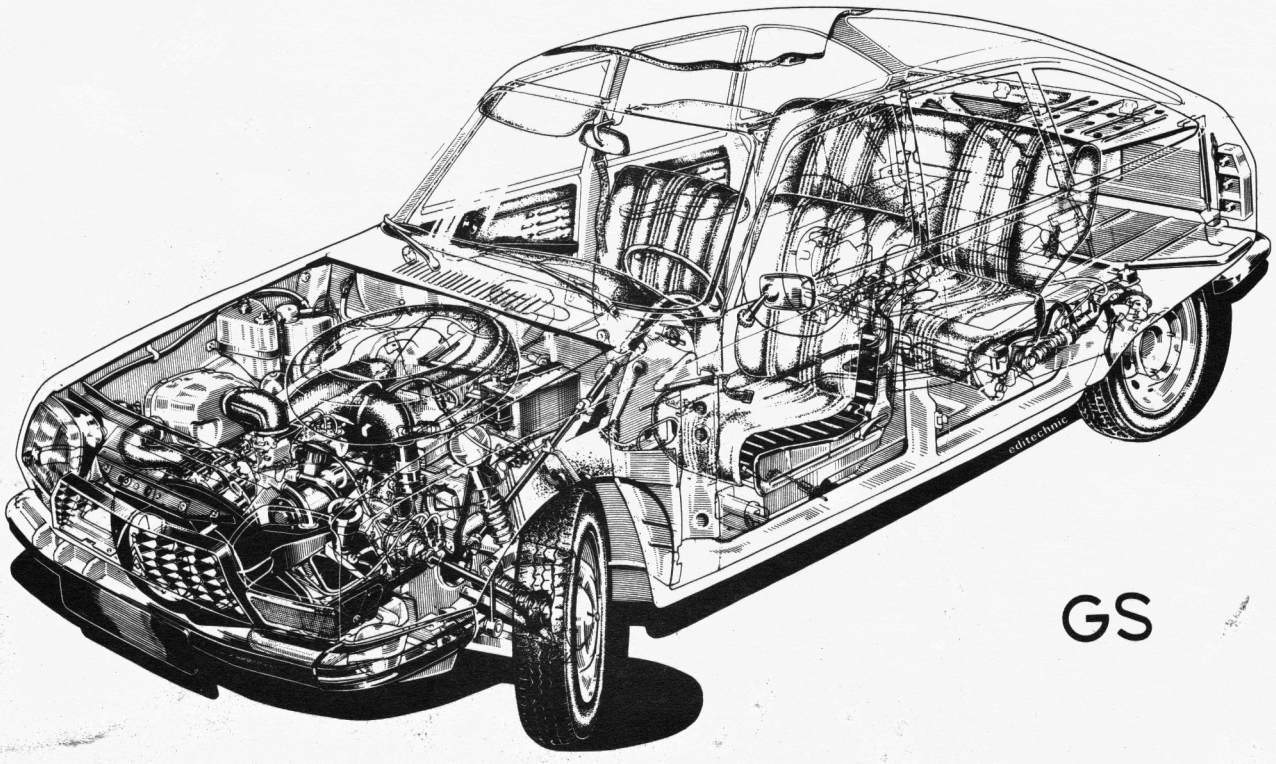

GS

Printed in France

SOCIETE ANONYME AUTOMOBILES CITROEN

S.A. AU CAPITAL DE 600.000.000 F - Regie par les articles 118 a 150 de la loi sur les Societes Commerciales

R.C. PARIS B 642 050 199 - SIRET 642 050 199 - 00016

SIEGE SOCIAL 117 a 167, QUAI ANDRE CITROEN 75747 PARIS CEDEX 15 - TELEPHONE 578 - 61 - 61

HOW TO USE THE MANUAL

PRESENTATION

To facilitate the use of the manual, operations have been grouped in two volumes ;

- Volume 1 contains :
  - the CHARACTERISTICS - ADJUSTMENTS - CHECKS

  This volume is essential to all workshops for repairs or overhauls

- Volume 2 contains the operations usually carried out and concerning :
  - REMOVAL and FITTING
  - RECONDITIONING
  - ELECTRICAL, HEATING and AIR CONDITIONING SYSTEM
  - BODYWORK

The above volumes are sold separately. They are presented bound in blue Fibrex with a « MULTO » type mechanism to facilitate the insertion of amendments or the extraction of a particular operation required by the workshop.

COMPOSITION

Every volume comprises :

- the list of operations contained in the volume

- these operations filed in numerical sequence

- the list of all the tools mentioned in the operations and the manufacturing drawings for special tools which are not sold but are intended to be manufactured by the repair department itself.

OPERATIONS

The sequence of operations has been devised in order to obtain the best quality of work in the shortest possible time.

The numbering of the operations is made up as follows :

a) The code letter for the car « G »

b) A number made up of three figures denoting the unit or its element

c) A figure code designating the type of repair :

- the figures 0 0 0 indicate the characteristics of the car
- the figures 0 0 indicate the characteristics of the unit
- the figure 0 indicates checks and adjustments
- the figures 1, 4, 7 indicate removal or fitting
- the figures 2, 5, 8 indicate dismantling or reassembly and
- the figures 3, 6, 9 indicate reconditioning

The thumb indexing which corresponds to the list of operations enables the particular operation to be found without difficulty

TOOLING

Special tooling is denoted in the text by a number followed by the letter T.

These tools are sold by :

- Etablissements FENWICK, Department AMA, 24 bd Biron - 93404 St.-OUEN - FRANCE

Additional tools of local manufacture are indicated in the text by a number preceded by the index MR : drawings for these tools appear at the end of the particular volume filed in numerical order.

TIGHTENING TORQUES

Torques are expressed in the following units :

- in metres Newton (mΛN) : the legal unit for measuring torque
- metre-kilogrammes (m.kg), since torque wrenches at present in use are sometimes graduated in m.kg :

1 m.kg = 9.81 mΛN (which may also be written mΛN or m.N)

The numbers corresponding to the torques are « rounded-off »

Examples : 2 mΛN = 0.2 m.kg = 1.4 ft.Ibs

60 mΛN = 6 m.kg = 43 ft.Ibs

IMPORTANT : When a tightening torque figure is followed by the words « torsion spanner », the operation must OF NECESSITY be carried out with a torsion spanner.

ADVISORY SERVICE

For all technical information concerning these vehicles, please contact :

The Service Department
Citroën Cars Limited,
Slough, Bucks, GB

or : DEPARTEMENT TECHNIQUE APRES-VENTE
ASSISTANCE TECHNIQUE
163, avenue Georges Clémenceau,
92000 NANTERRE - FRANCE

MANUAL N° 810 - 2

FIRST SECTION

Manual 810-2

REMOVAL

and

FITTING

LIST OF OPERATIONS
IN THE FIRST SECTION OF THE MANUAL N° 810-2

Operations where the number is preceded by the letter « G » are common to all types of vehicles of the « GS » family.
Operations where the number is preceded by the letter « GE » or « GF » are specific to the five-or three-door versions of the « GS » Estate respectively.
Operations where the number is preceded by the letter « Gea » are specific to vehicles fitted with a Torque Converter.

Operation Number	DESCRIPTION
	ENGINE - CARBURATION - IGNITION
G.100-1	Removing and fitting an engine-gearbox assembly
G.100-4	Removing and fitting an engine only
G.112-4	Work on cylinder heads :
	- Removing and fitting a rocker shaft or a rocker arm *(on the vehicle)*
G.122-4	Work on the timing :
	- Removing and fitting a driving belt, a tensioner or a timing gear
G.123-1	Removing and fitting a camshaft
G.222-1	Work on the oil pump :
	- Removing and fitting a pump drive (or seal) or an oil pump *(on the vehicle)*
	GEARBOX
G.330-2	Stripping down and assembling a four-speed gearbox
G.334-1	Work on the gear change :
	- Removing and fitting the gear lever
	- Removing and fitting the linkages
G.343-4	Work on gearbox drive outlet :
	- Removing and fitting a differential shaft, a bearing or a seal
	HIGH PRESSURE PUMP AND RESERVOIR
G.391-1	Removing and fitting a high pressure pump
	FRONT AXLE
G.412-1	Work on the front suspension :
	- Removing and fitting an upper suspension arm
	- Removing and fitting a lower suspension arm
G.413-1	Work on the swivel :
	- Removing and fitting a complete swivel assembly or a ball joint
	- Removing and fitting the bearing, seals or hub
G.414-1	Removing and fitting the front axle unit for exchange
	REAR AXLE
G.422-1	Removing and fitting a rear suspension arm
G.422-4	Work on the rear suspension arm
	- Removing and fitting bearings, a seal or a friction washer
G.423-1	Work on the rear wheel hub :
	- Removing and fitting a brake disc, a hub or a bearing
G.424-1	Replacing the rear axle unit
G.424-4	Replacing a suspension arm support tube

LIST OF OPERATIONS
IN THE FIRST SECTION OF THE MANUAL N° 810-2

Operation Number	DESCRIPTION
	SUSPENSION SYSTEM
G.434-1	Work on the mechanical components of the suspension system : - Removing and fitting a front anti-roll bar or its bearings
G.437-1	Work on the height control system : - Removing and fitting an automatic front control system
	STEERING
G.442-1	Removing and fitting a steering system
	BRAKES
G.451-1	Work on the front brakes : - Replacing main brake pads - Removing and fitting a brake unit - Removing and fitting a brake disc - Replacing the emergency brake pads
	ELECTRICAL SYSTEM
G.560-1	Work on the windscreen wiper : - Removing and fitting a windscreen wiper motor - Removing and fitting a windscreen wiper mechanism
	TOOLS
	List of tools mentioned in the section
	Manufacturing drawings for tools not sold

REMOVING AND FITTING AN ENGINE-GEARBOX ASSEMBLY

8686



8685

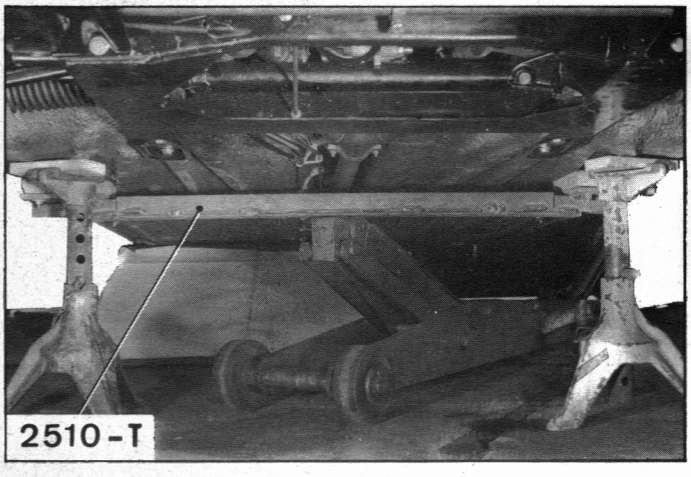

8367

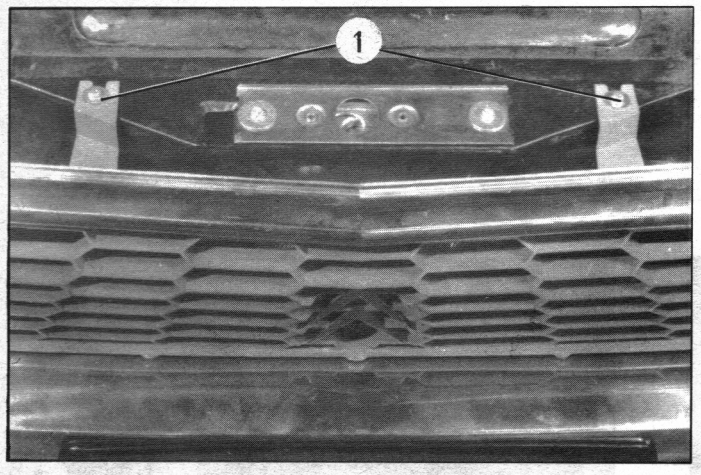

REMOVAL

1. Chock up the vehicle :

Raise the vehicle to the *high position.* to allow a jack to be pushed underneath fitted with trestle support 2510-T.

Raise and prop the front of the vehicle *with the wheels off the ground* (see figure for arrangement of props).

Place the jack immediately below the rear seats.

2. Release the pressure in the suspension circuits :

With the engine stopped, place the vehicle height control lever *in the normal position.*

Slacken the pressure regulator bleed screw.

Place the lever *in the high position* and wait until the rear suspension has completely settled.

Check that there is no pressure in the front suspension system (cylinders free).
Otherwise operate the front height corrector.

Jack up the rear of the vehicle (underneath the rear seats).

3. Remove the front wheels and the spare wheel.

Disconnect the cable from the negative terminal of the battery.

Remove the nut holding the stay on the bonnet.

Raise the bonnet fully without touching the upper panel and secure it in position, using a cord.

4. Remove the grille :

Slacken the bolts (1), remove the grille by pulling it upwards.

8625

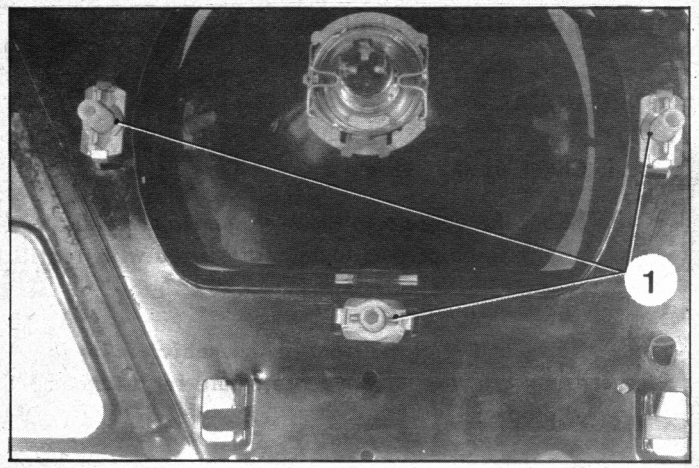

8597

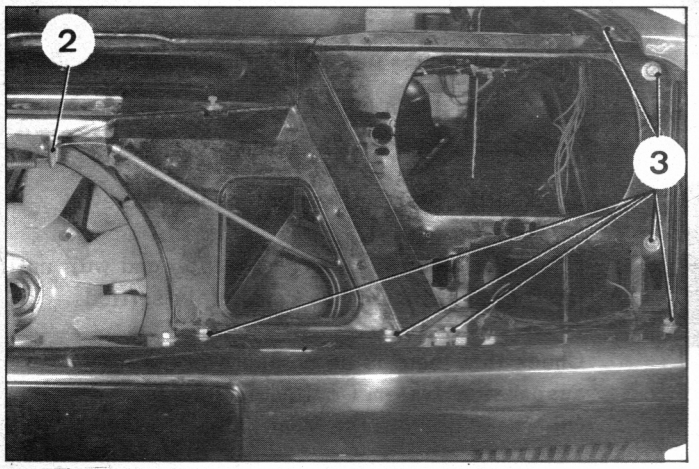

8599

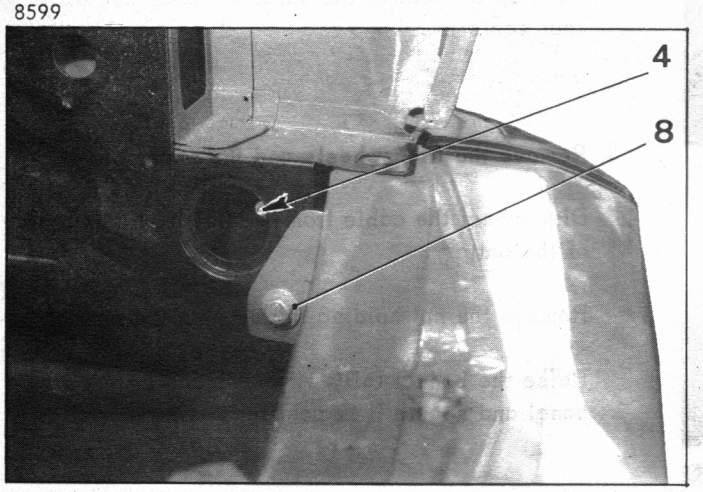

8600

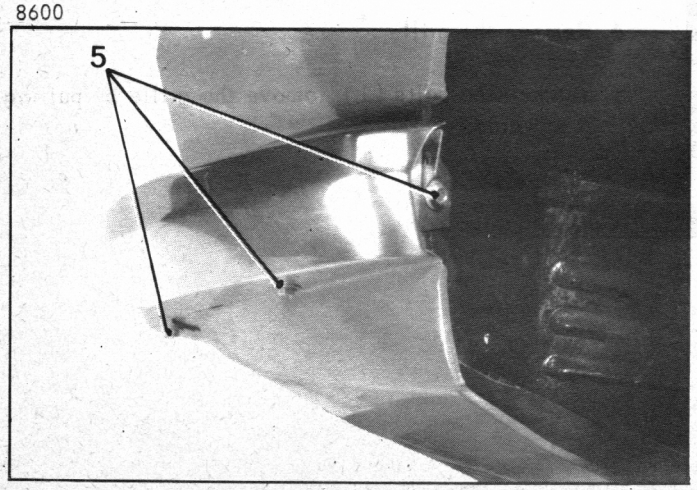

5. Disconnect the electrical harness :

Remove the indicator lights.
Pull out the connectors from the headlights.
Free the harness from its brackets on the fan panel.
Disconnect the leads from the alternator and the horn.
Remove the rubber collar from the inlet tube to the air filter.

6. Remove the headlights :
Rotate the locks (1) holding the headlights and remove them.

7. Remove the fan panel.
Disconnect the control cable from the bonnet lock (2).
On each side, remove the bolts (3) holding the fan panel.
Remove the horn with its bracket.
Remove the fan panel.

8. Remove the lower finishing panel :
On each side, remove :
- the nut (4) and the bolts (5) holding the lateral part of the bumpers.
- the bolts (7) holding the front of the plate protecting the anti-roll bar bearing.
- the bolts (6) and the bolt (8) holding the panel.

Remove the panel.

8756

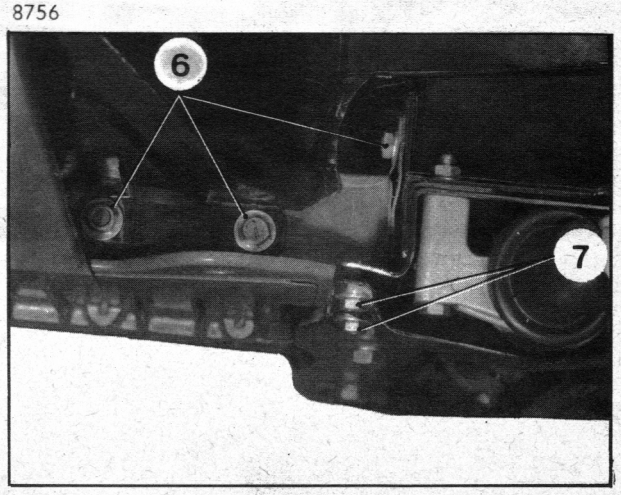

11 822

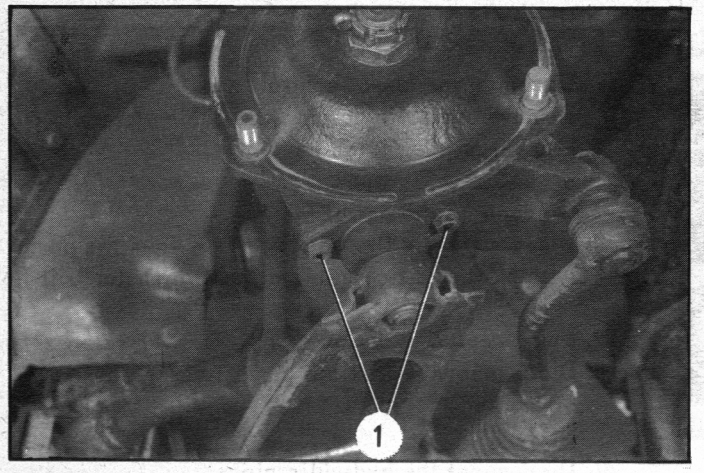

8366

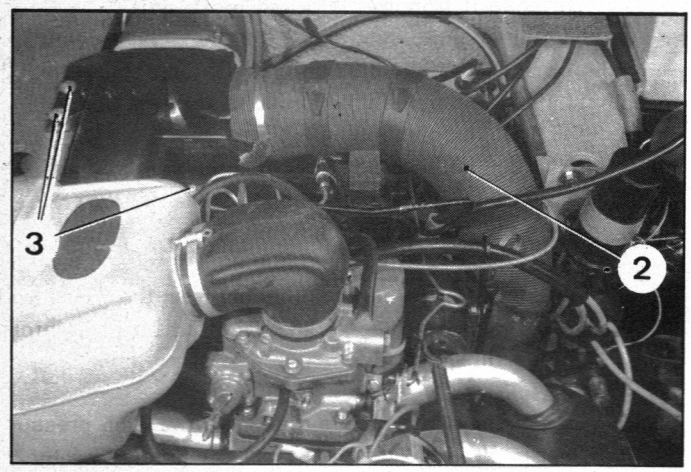

8460

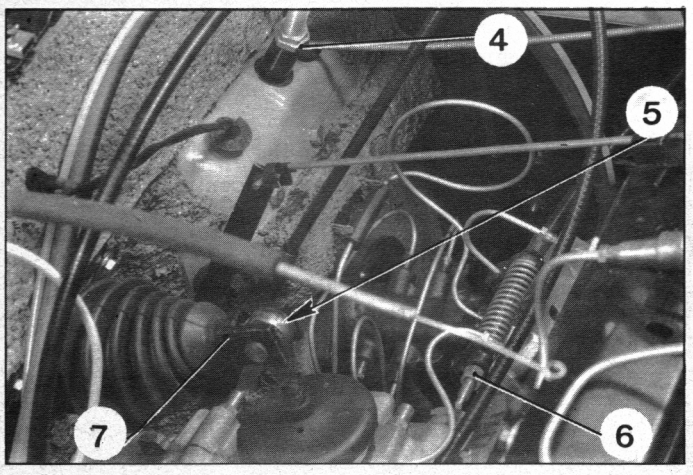

9. Uncouple the drive shafts :

Remove the nuts holding the drive shafts on the differential shafts.
Remove the bolts (1) holding the ball joints of the lower suspension arms.
Release the drive shafts from the studs on the differential shafts.

10. Disconnect the electrical harness :

a) Disconnect the leads :
- from the distributor,
- from the engine oil pressure warning lamp,
- from coil to distributor (H.T. lead),
- from the starter motor,
- from the engine oil thermal switch
- from the reversing light contactor.

b) *For a vehicle fitted with a torque converter :* disconnect in addition :
- the leads from the electro-valve (on the clutch housing),
- the leads from the starter inhibitor switch (on the rear cover of the gearbox).

11. Remove the spare wheel support.

12. Remove the heater distribution box :

Remove the fixing bolts (3) from the box.
Uncouple the control cable.
Remove the box with the hose (2).

13. Uncouple the flexible drive from the speedometer :

Remove the spring clip and withdraw the flexible drive.

14. Uncouple the emergency brake cables :

Remove the locknuts, the adjusting nuts (6) and release the cable ends from the brake units.

15. Uncouple the clutch cable :

Slacken the cable adjusting nuts (4) .
Release the cable from the clutch fork (from underneath the vehicle).

NOTE : If an assistant is available, have him depress the clutch pedal.
From underneath the vehicle, chock the clutch fork, have the assistant release the pedal and then release the cable end from the fork.

16. Uncouple the gear lever :

Remove the retainer (5) from the lever link pin.

Remove the pin and uncouple the gear lever (7).

8475

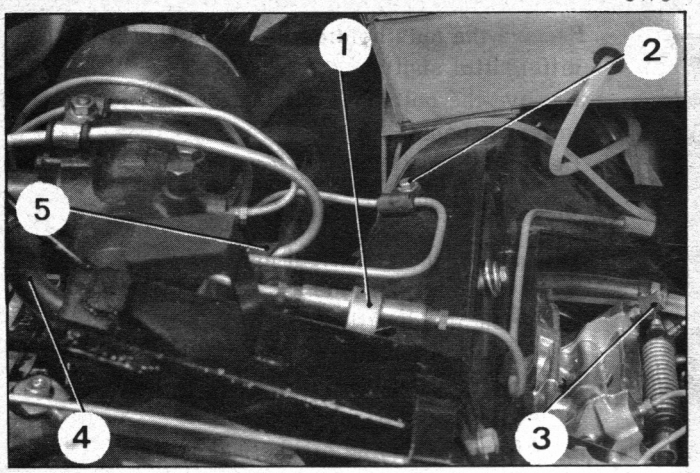

11 297

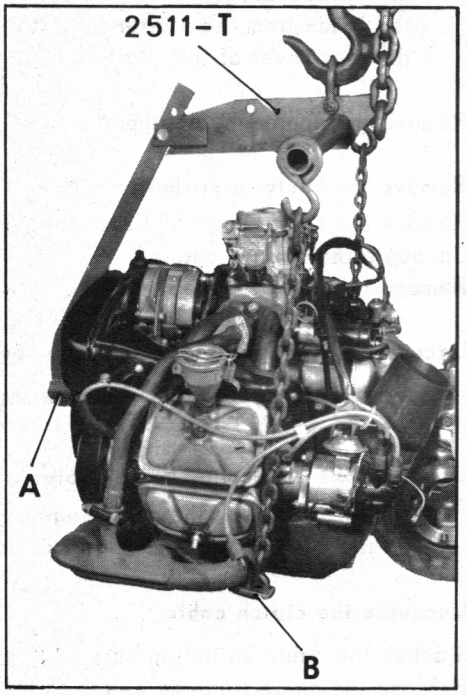

8537

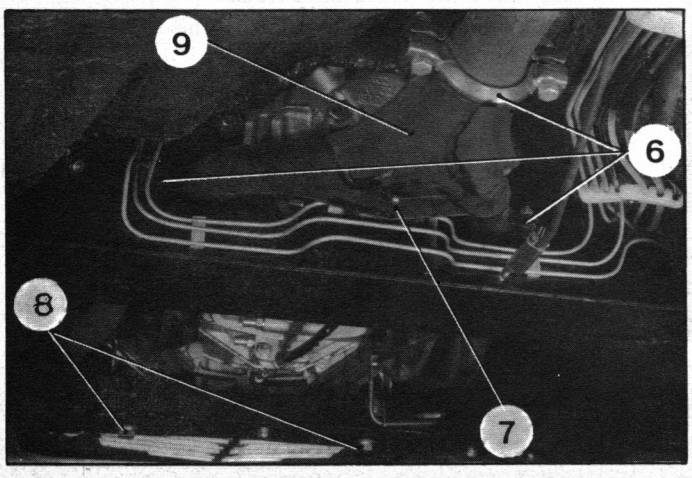

17. Uncouple the carburettor controls :

Uncouple the control cable from the butterfly valves.
Uncouple the choke control.
Remove the bolts holding the cable sheath bracket on the clutch housing.

18. Disconnect the petrol feed :
Disconnect the flexible feed pipe from the pump. (Blank the orifice using a 7 mm diameter bolt).

19. *For a vehicle fitted with a torque converter :*
Disconnect the flexible pipes from the converter oil cooler.

20. Disconnect the hydraulic pipes :
Disconnect the main feed pipe from the two-way union (1).

Remove the bolt (2) holding the tube bracket.

Unscrew the feed pipe for the front brakes and release it from the lefthand brake unit.

Remove the bleed screw (3) (blank off the orifice). *(Vehicles fitted with brake units, old model only).*
NOTE : If the bleed screw is not removed, it might be damaged when the engine-gearbox assembly is being removed.

Disconnect the return pipe (4) from the pressure regulator and remove the rubber collar (5) which holds this tube.

Disconnect the intake pipe from the high pressure pump. Release the pipe from the bracket on the righthand wheel arch.

21. Disconnect the engine-gearbox assembly :

a) Bring up the lifting apparatus, fitted with the sling bracket 2511-T (see photograph for engagement of hooks A and B)

Tighten the chains without raising the engine.

b) Remove :
- the clamps (6) from the exhaust pipe,
- the bolt (7) holding the central exhaust pipe support on the gearbox housing,
- the Y-chaped connecting piping (9),
- the bolt holding the rear flexible mounting for the gearbox,
- the bolts (8) holding the front flexible mountings for the engine.

8460

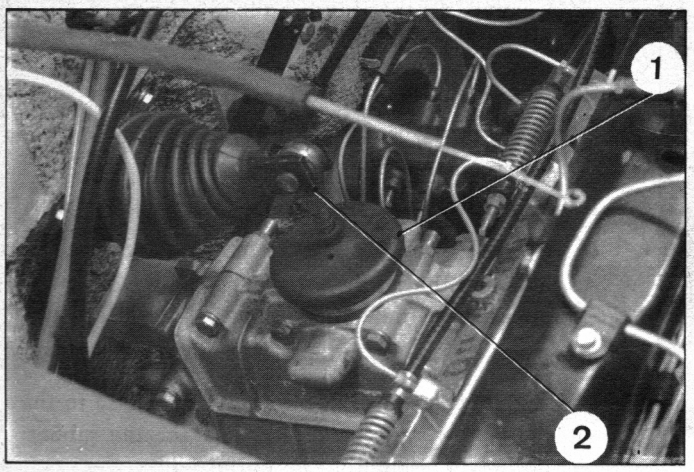

7025

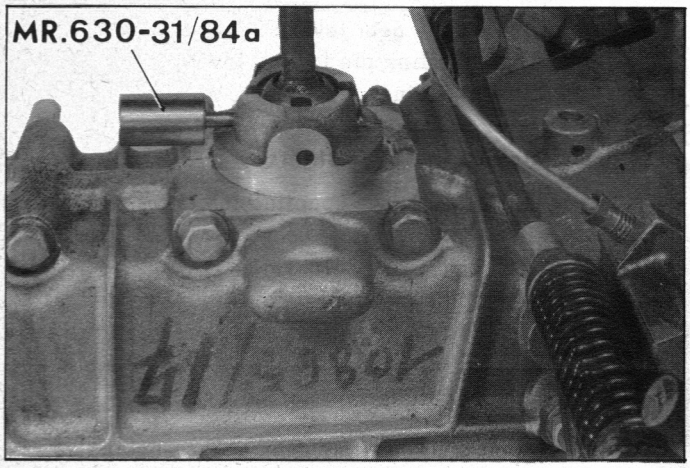

8620

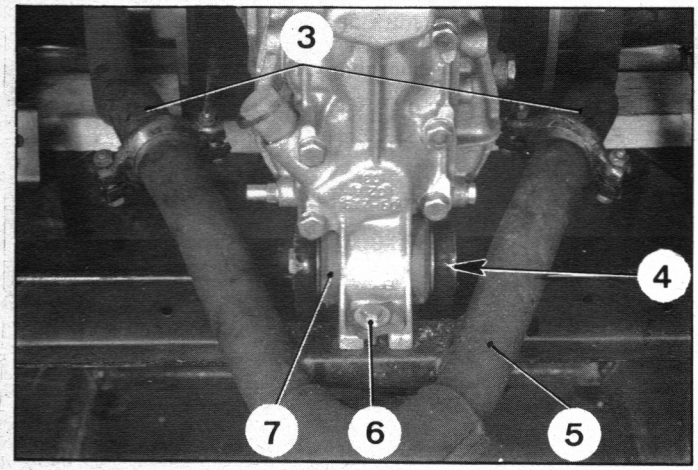

8536

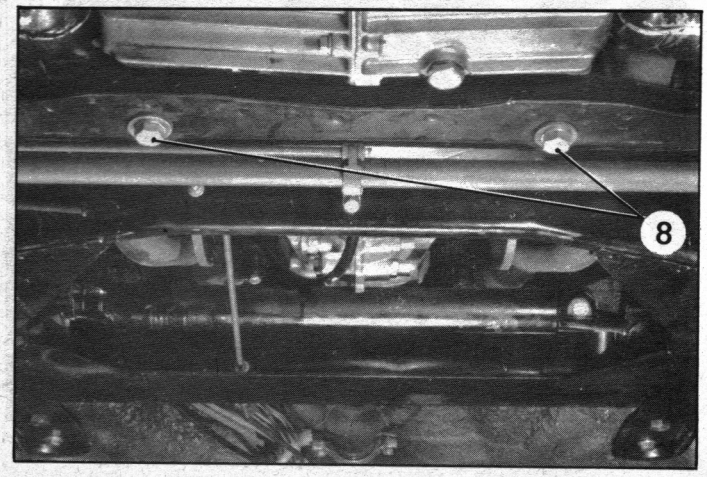

22. Remove the engine-gearbox assembly :

a) Pull the engine-gearbox assembly gently forward and remove :
- the collar holding the dust cover (1) and release this by pulling it up,
- the lever (2) operating the fork shafts (remove the Mecanindus split pin holding the lever (2) to the ball joint, using the mandrel MR. 630-31/84 a).

b) Release the engine-gearbox assembly by pulling it forward.
CAUTION : Take care that :
- the distributor does not foul the left-hand wheel arch,
- the tube linking the brake units does not come in contact with the crossmember of the axle unit.

c) Remove the left and right exhaust connecting pipes.

FITTING

23. Fitting the engine-gearbox assembly :

a) Position the sling bracket 2511-T and place the assembly on the vehicle by passing the gearbox underneath the upper crossmember of the axle unit.
CAUTION : Take care that :
- the distributor does not foul the left-hand wheel arch,
- the tube linking the brake units does not come in contact with the crossmember.

b) Fit :
- the lever (2) operating the fork shafts (insert the Mecanindus pin in the ball joint using the mandrel MR. 630-31/84 b),
- the dust cover (1) (tighten the collar).

c) Insert the rear flexible mounting (7) in the support on the axle unit.
Insert the bolt (4). Tighten the nut from 23 to 40 mΛN (2.3 to 4 m.kg) (toothed washer).

d) Fit the bolts (8) securing the front flexible mountings for the engine and tighten them to 40 to 45 mΛN (4 to 4.5 m.kg).

e) Connect up the tubes (3) to manifolds the left and righthand engine exhaust (do not tighten the clamps).

f) Remove the sling bracket 2511-T

24. Fit the exhaust pipes :

Couple up the Y-shaped piping (5) to the connecting pipes (3) and the central exhaust pipe.
Fit the clamps.
Fit the sealing rings to the heater pipes.
Tighten the bolt and nut (6) (plate, spring and flat washer) fixing the Y-shaped piping (5) on the gearbox housing.

9633

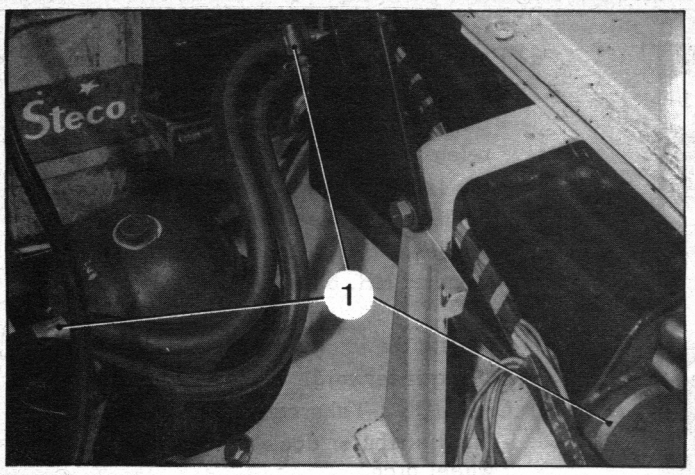

8446

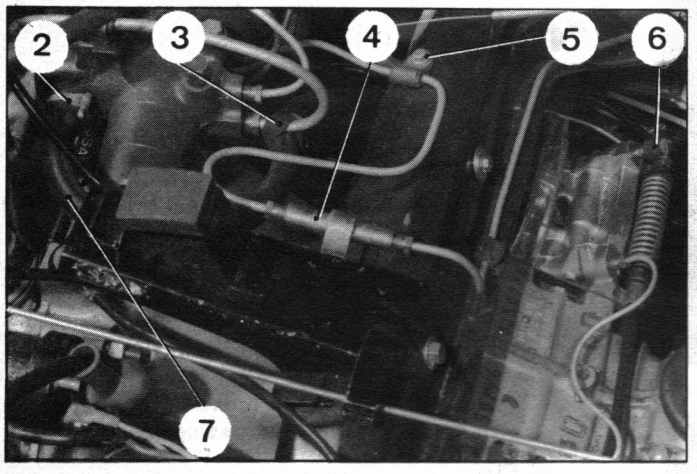

11 846

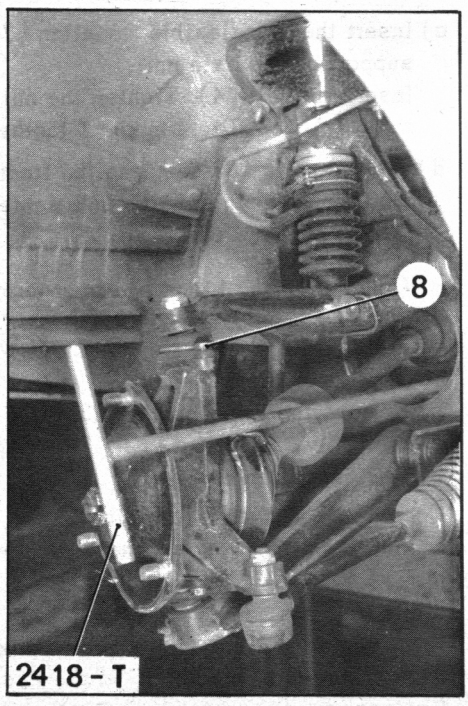

25. *For a vehicle fitted with a torque converter :*
Connect up the flexible tubes to the converter oil cooler. Tighten the collars (1).

26. **Connect up hydraulic circuit pipes :**

Connect the main feed pipe to the two-way union (4) (new seal).

Insert the bolt (5) holding the clip.

Connect the feed pipe to the lefthand brake unit and the brake unit connecting tube if necessary (new seals).

Fit the bleed screw (6).

Connect up the flexible return pipe (7) to the pressure regulator and fix it using the rubber collar (3). Tighten the collar (2)

27. **Link up the gear lever :**
Insert the link pin for the levers.
Fit the retainer.

28. **Link up the drive shafts :**

Tighten the nuts coupling the drive shafts to the differential shafts (gearbox outlets) to 50 mΛN (5 m.kg) (key 2418-T).
Use MR.630-64/ 40 to hold the plate.
Link up the lower suspension arms to the swivels.
Tighten the bolts (8) to 18.5 mΛN (1.8 m.kg) (contact washer) (torque wrench).

29. **Connect up the emergency brake cables :**

Fit the brake cables.
Tighten the nuts and locknuts (9).

30. **Adjust the emergency brake.**

31. **Connect up the clutch cable :**
Connect the cable to the clutch fork.

32. **Adjust the clutch clearance.**

8458

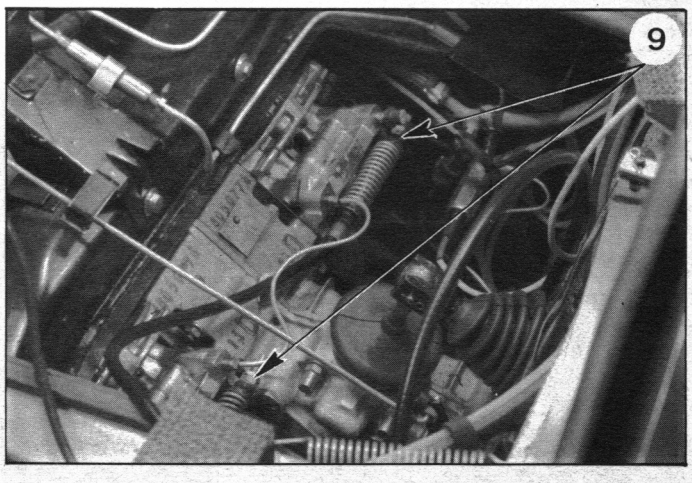

9704

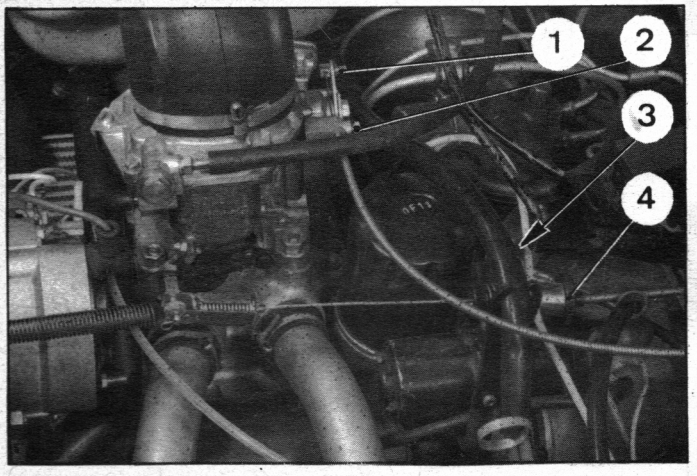

11 208

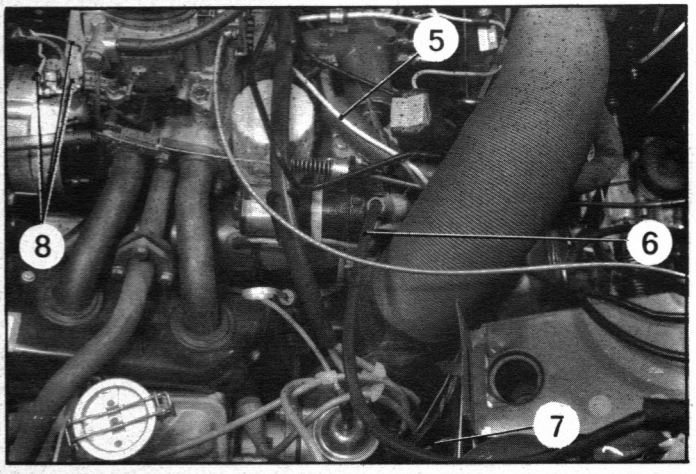

33. Connect up the speedometer drive cable :

Insert the end of the cable in the gearbox drive socket.
Insert the stop pin.

34. Connect up the carburettor controls :

Fix the cable sheath bracket (3).
Connect up the butterfly valve cable.
Fit the sheath of the choke control into its support.
Lightly tighten the bolt (2).
Before tightening the cable stop screw (1), leave a clearance of 3 to 5 mm at the knob so that the choke is properly closed. If necessary, adjust the tension of the butterfly valve control cable using the bolt (4).

35. Install the spare wheel support and fix the hydraulic pipe.

36. Connect up the petrol feed :

Remove the blanking bolt.

Connect up the flexible feed pipe to the petrol pump.

37. Connect up the electrical harness :

a) Connect :

- the lead (5) to the oil pressure warning lamp,
- the leads (6) to the starter motor (shakeproof washer),
- the lead (7) to the distributor,
- the leads (8) to the alternator,
- the high tension lead to the distributor,
- the lead to the oil thermal switch,
- the lead to the reversing light contactor.

b) *For a vehicle fitted with a torque converter.*
Also connect :

- the leads to the electro-valve,
- the lead to the starter inhibitor switch.

8756

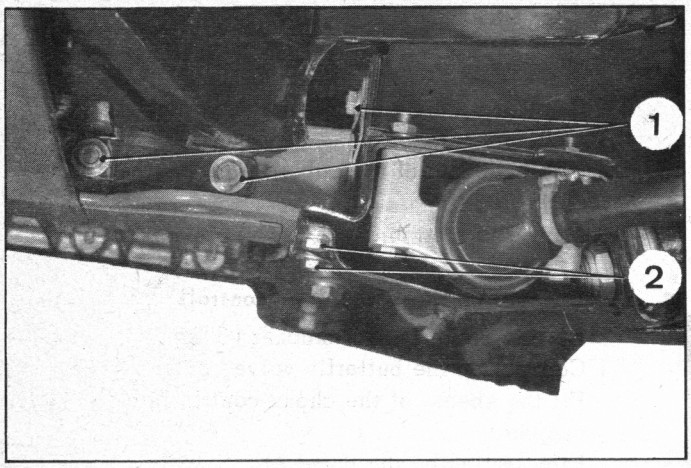

8601

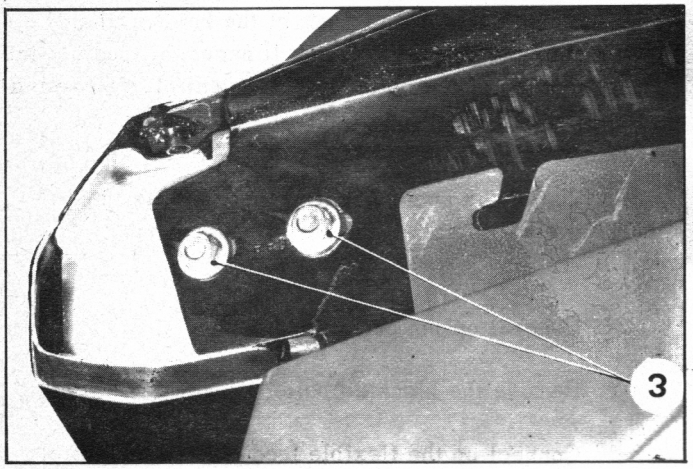

8599

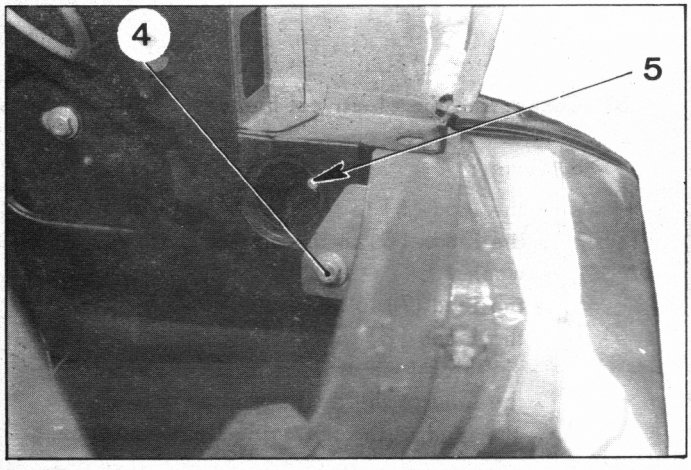

8597

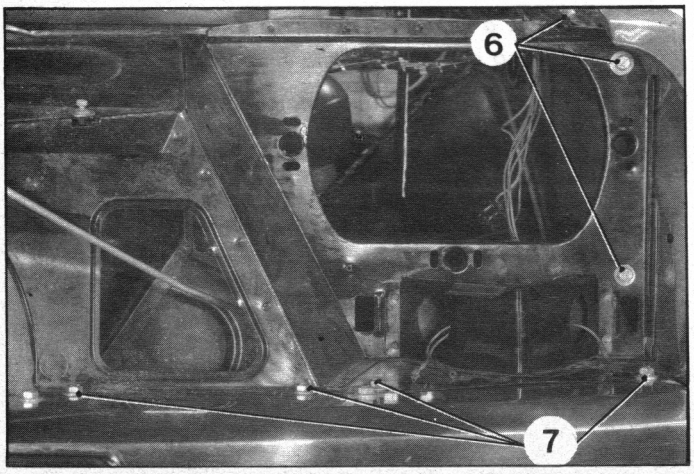

38. Fit the lower finishing panel :

Present the panel and bumpers.

On each side :

- Fit (without tightening them) the bolts (1) and (2) (contact washer) on the axle unit.
- Fit the bolts (3) and (4) (contact washer).

Tighten all the bolts.

Fit the lateral parts of the bumpers :

On each side :

- Fit the nuts (5) and the bolts (8) (contact washer).
- Check the alignment of wing and bumper.

Finally tighten nuts and bolts.

39. Fit the fan panel :

Present the panel between the wings, with the top slightly inclined backwards.

On each side :

Fit (without tightening them) the bolts (6) and (7) (contact washer).

Finally tighten all the bolts.

Fit the accelerator return spring.

Fit the horn with its bracket.

8600

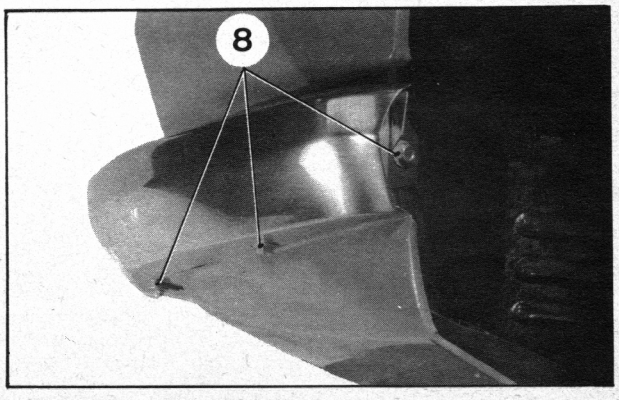

8625

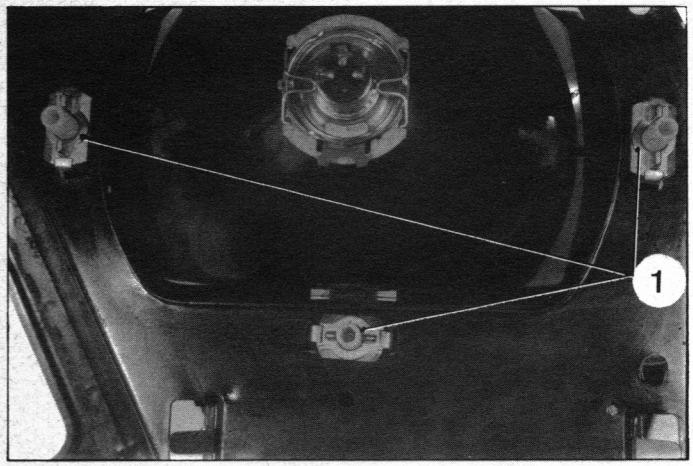

8367

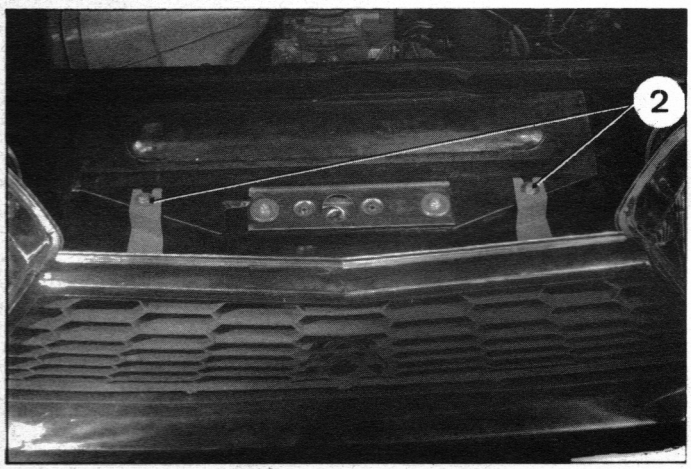

8366

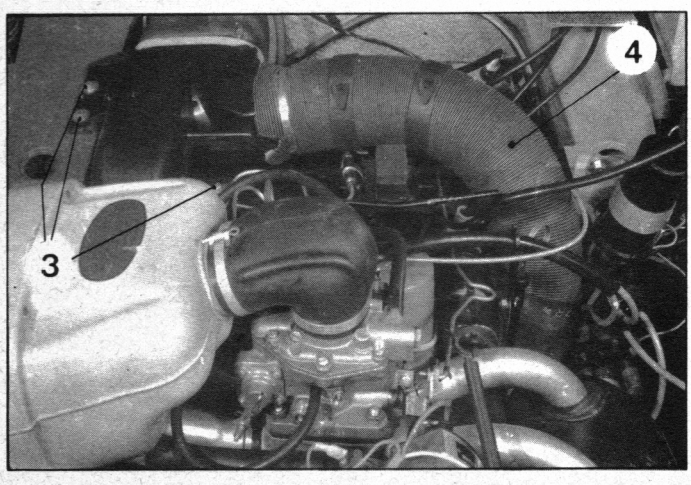

40. Fit the headlights :

Position the headlights.
Insert the locking tabs (1) (turn to lock).
Fit the connectors on the headlight bulbs.
Connect up the horn.
Fit the electrical harness in the securing clips.

41. Fit the indicator lights :

Connect up the leads before fitting.
Fit the lights (push to lock).

42. Fit the bonnet lock control cable :

Check operation.

43. Fit the grille :

Insert the lower lugs into the slots.
Fit the upper brackets under the flat washers (2)
Tighten the bolts (contact washer).

44. Connect the cable to the negative terminal of the battery.

45. Check the oil levels.

46. Prime the high pressure pump :

a) Link up the flexible intake pipe to the filter tube of the hydraulic fluid reservoir.

Fill the pump by pouring L.H.M. liquid into the tube.

b) Slacken the pressure regulator bleed screw
Start up the engine and rapidly push the tube into the reservoir.

47. Retighten the pressure regulator bleed screw .
With the engine running, check that the unions in the hydraulic circuit do not leak.

48. Fit :

- the protective shield for the front height corrector,
- the front wheels.

Lower the vehicle to the ground.

49. Bleed the front brakes.

50. Fit the heater distribution box :

Tighten the fixing bolts (3) (contact washer).
Link up the heater pipe (4) to the lefthand heater duct.
Connect up the cable to the flap control lever.
Check that it operates correctly.

51. Fit the stay to the bonnet.
52. Replace the spare wheel.
53. Check the headlight adjustment.

REMOVING AND FITTING AN ENGINE ONLY

8367

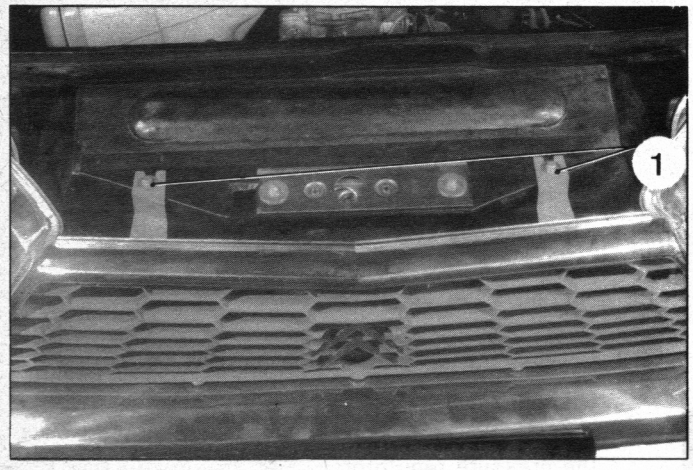

REMOVAL

1. Chock up the vehicle :

Place the height control lever to « *high position* ». Chock up the vehicle at the front (with the wheels off the ground) and at the rear (jack fitted with support 2510-T).

Release the pressure.

2. Remove :

- the spare wheel,
- the nut holding the stay on the bonnet.

Raise the bonnet fully without touching the upper panel and secure it in this position, using a cord.

3. Disconnect the cable from the negative terminal of the battery.

8625

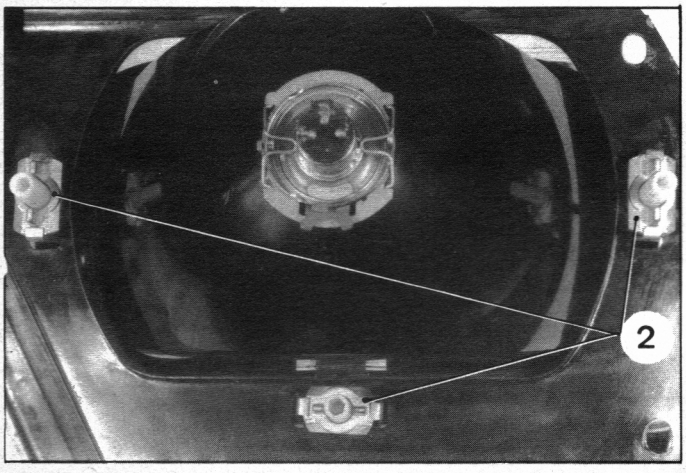

4. Remove the grille :

Slacken the bolts (1) and remove the grille by pulling it upwards.

5. Disconnect the electrical harnesses :

- Unfasten the connectors from the headlight bulbs.
- Disconnect the horn lead.
- Remove the direction indicator lights.
- Release the harness from its clips on the fan panel.

6. Remove the headlights :

Turn the headlight locks (2) to remove them.

8597

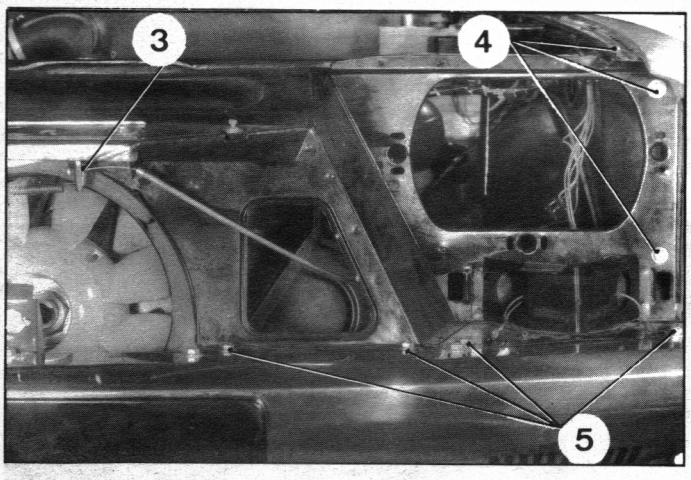

7. Remove the fan panel :

Disconnect the bonnet opening cable (3).

On each side :

Remove the bolts (4) and (5) from the fan panel.

Remove the horn with its bracket.

Remove the fan panel.

8599

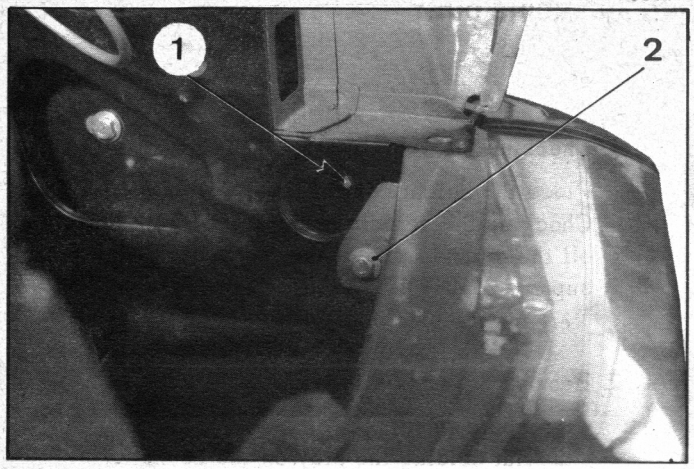

8600

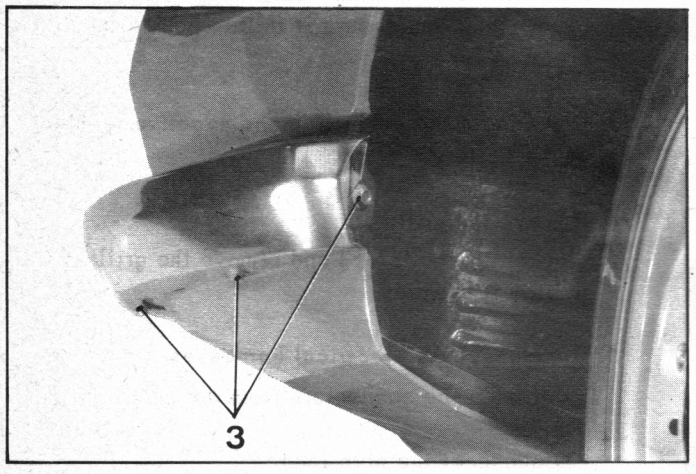

8601

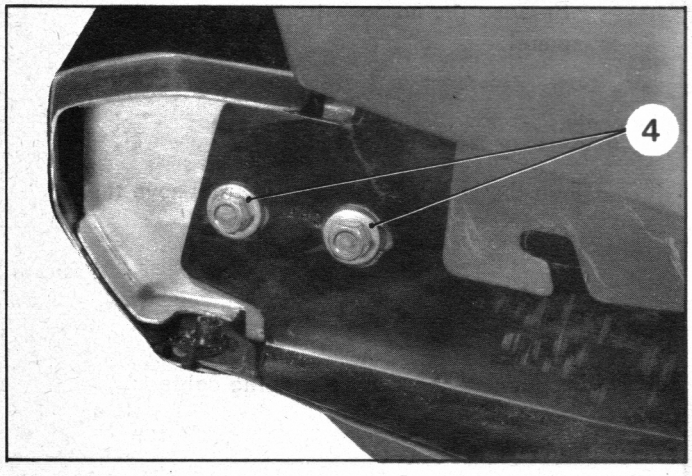

8756

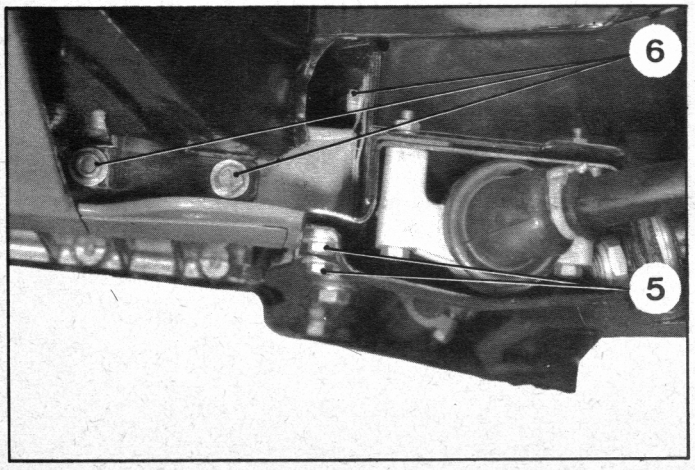

8. Remove the lower finishing panel :

At each side :

- Remove the nut (1) and the bolts (2) and (3). Free the lateral part of the front bumpers.
- Remove the protective shield for the height corrector (righthand side only).
- Remove the bolts (4).
- Remove the bolts (5) securing the front of the anti-roll bar bearing protecting plate,
- Remove the bolts (6) holding the panel to the unit.
- Remove the panel.

9. Disconnect the carburettor controls :

Disconnect the throttle control cable.
Remove the bolts holding the sheath support on the pressure regulator.

10. Remove the heater distribution box :

Disconnect the cable from the control lever.
Remove the bolts (7) holding the box.
Remove the box together with the lefthand hose.

11. Remove the spare wheel support.

12. Disconnect the electrical harness :

Disconnect the leads :
- from the distributor,
- from the oil pressure warning lamp,
- from coil to distributor (high tension lead),
- from the starter motor,
- from the alternator,
- from the oil thermal switch.

Release the harness and lay it on the left-hand extension arm.

8366

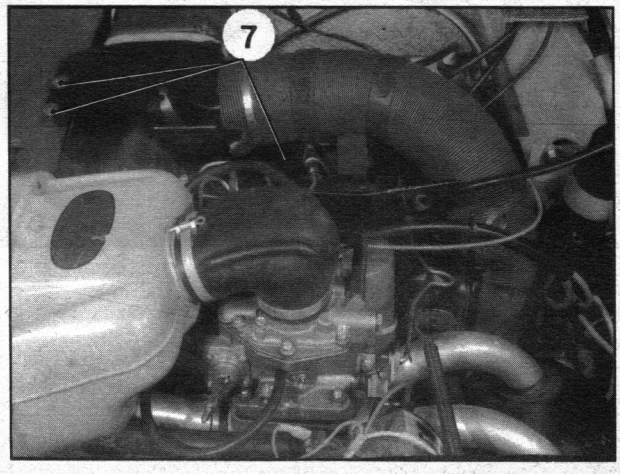

8776

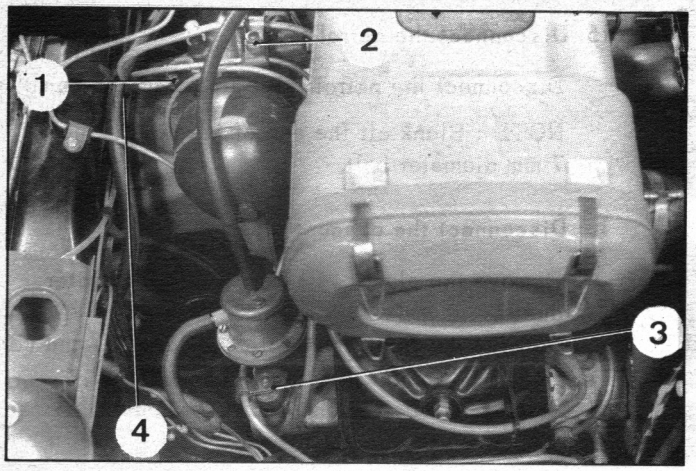

9637

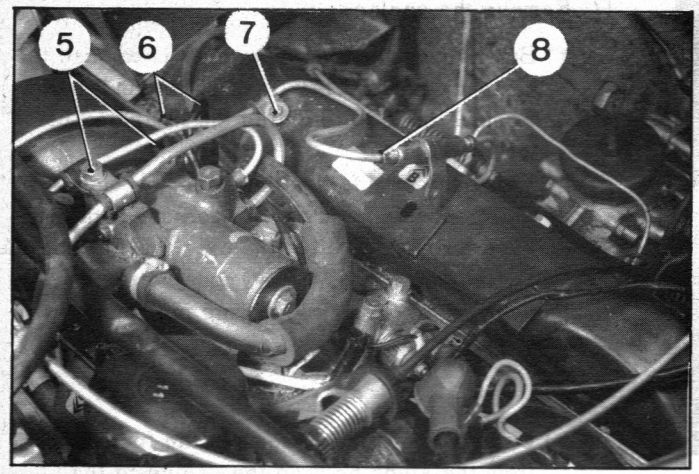

9646

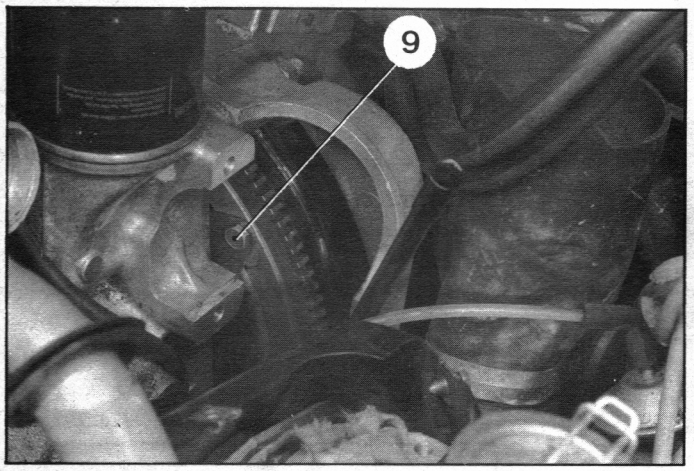

9691

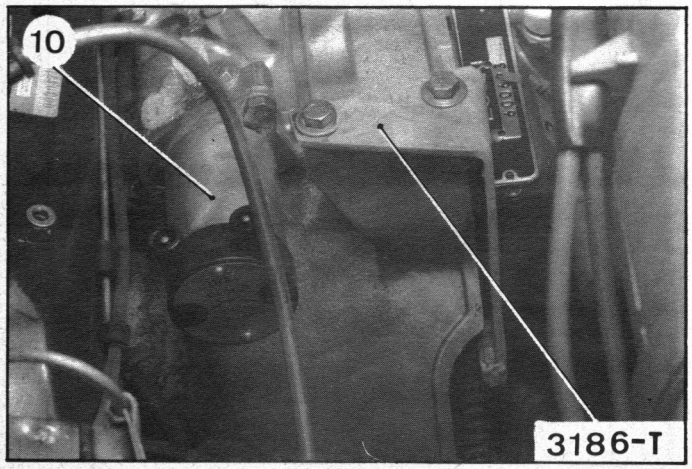

13. Disconnect the hydraulic circuits :

Disconnect the flexible pump inlet pipe from the hydraulic reservoir.
Release this pipe from the clip on the wheel arch and remove the rubber collar (4). Disconnect the pipe (1) from the pressure regulator.
Remove the nuts (2) and (3) and free the clips from the tube (1).
Remove the tube (1) from the pressure regulator.

NOTE : Blank off the ends of the tubes.

14. For vehicles fitted with a torque converter :

a) *Remove the pressure regulator :*

Disconnect the pipe (8) (blank off the opening).
Remove the bolt (7).
Disconnect the leads (6) from the electro-valve.
Remove the bolts (5) holding the pressure regulator, release the latter and lay it on the righthand extension.

b) *Remove the starter motor.*

c) Disconnect the flexible hose which supplies air to the converter oil cooler.

d) *Remove the three bolts (9) holding the converter drive plate.*

e) *Hold the converter using the bracket 3186-T fixed in the place of the pressure regulator.*

VERY IMPORTANT :

- It is essential to use the bracket 3186-T; otherwise the converter would not be held in position when the engine is removed.

- *The electro-valve (10) must never be disconnected from the control distributor of the converter.*

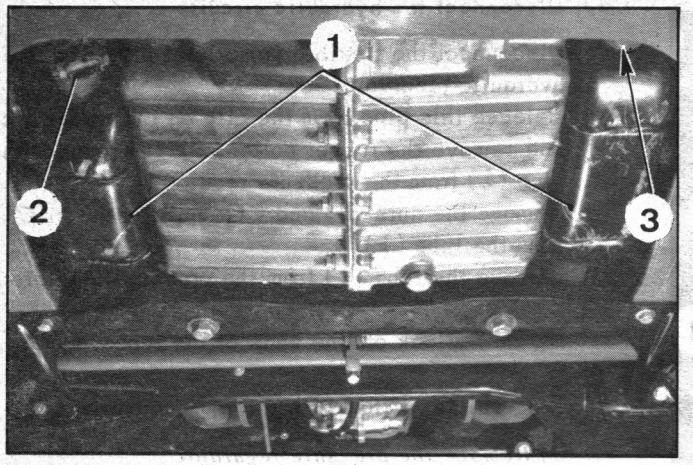

8536

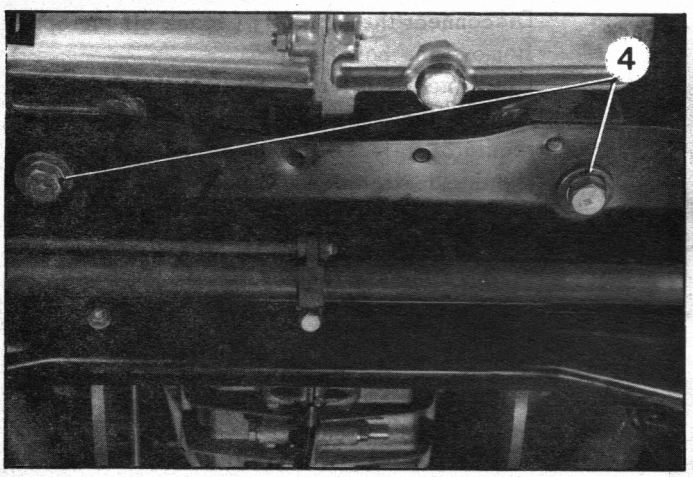

8534

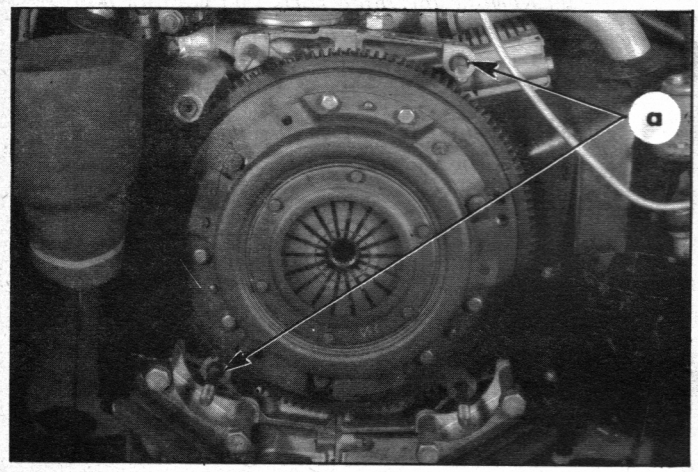

8628

15. Disconnect the petrol feed :

Disconnect the petrol inlet pipe from the pump.

NOTE : Blank off the end of the pipe using a 7 mm diameter bolt.

16. Disconnect the exhaust pipes :

Remove the plates (1) from the lower heater ducts.
Remove the front connection collars (2) and (3) from the exhaust pipes.
Slacken the bolt of the central exhaust pipe support on the gearbox.

17. Remove the engine :

a) Bring up the lifting apparatus fitted with the sling bracket 2511-T (see photograph below).
Remove the bolts holding the front flexible mountings (4).
Raise the engine-gearbox assembly until the clutch housing comes into contact with the upper crossmember of the axle unit. Chock the engine-gearbox assembly underneath the gearbox housing, taking care not to damage the clutch cable.

b) Using a key 1690-T, remove the four nuts from the studs holding the engine to the gearbox.

CAUTION : *Never disconnect the electro-valve from the control distributor of the converter.*

11 297

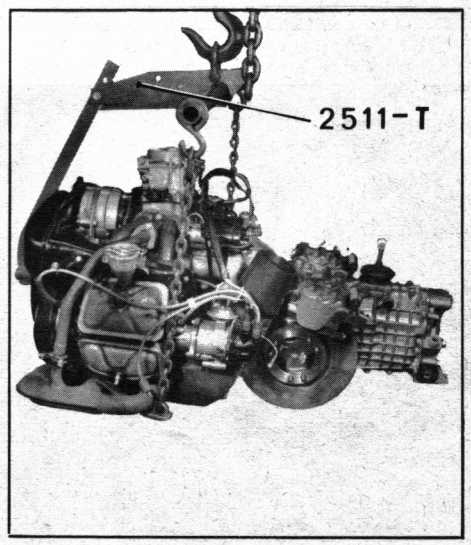

c) Clear the engine by bringing it forward.

CAUTION : Support the engine in such a way as to avoid any strain on the gearbox control shaft.
Ensure that the distributor does not foul the wheel arch.

FITTING

18. Make sure that the two centering dowels are in position in their housings on the engine casing at « a ».

Also make sure that the corresponding housings in the clutch casing are not damaged.

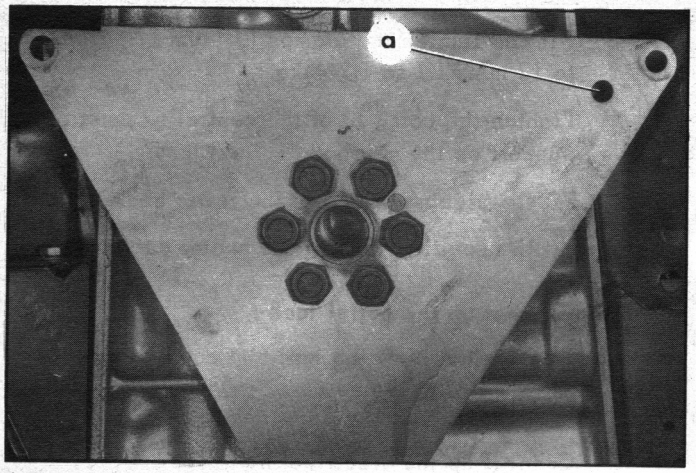

9654

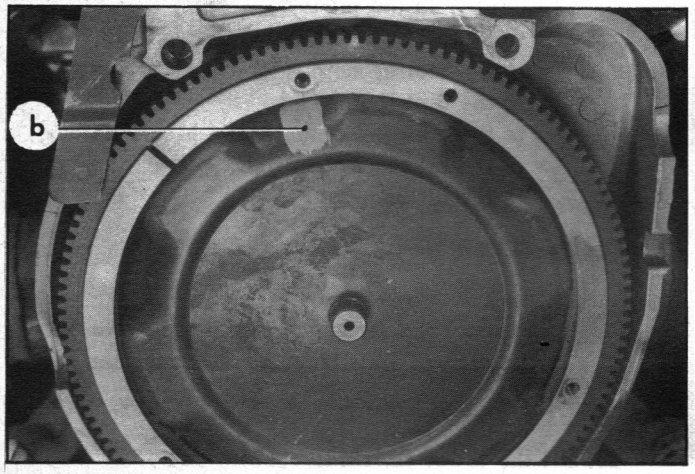

9655

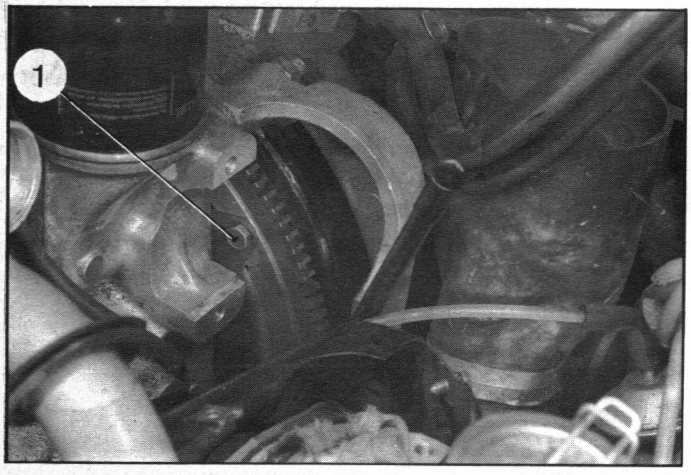

9646

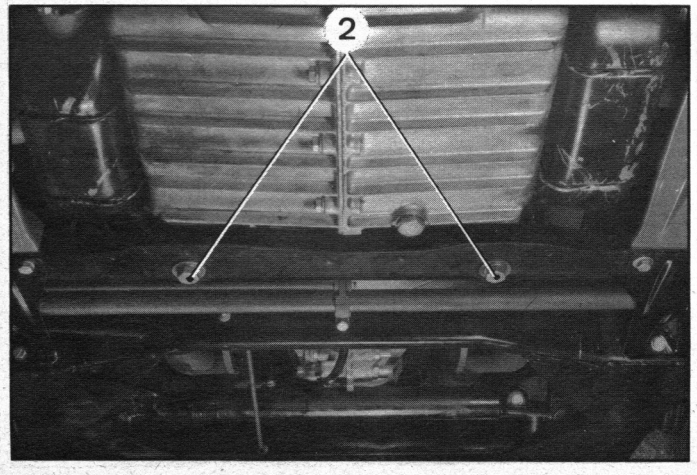

8536

Manual 810-2

19. Couple the engine to the gearbox :

a) *For vehicles fitted with a torque converter :*

- Before fitting, make sure that the hole « a » in the drive plate is opposite the painted mark « b » on the converter housing (ignition point mark).
- Smear the converter centering peg and its housing in the crankshaft with TOTAL MULTIS grease.
- Offer up the engine to the gearbox : engage the studs to bring the converter centering peg into its housing in the crankshaft.
- Tighten the nuts joining the engine to the gearbox (shakeproof washer) to 45 mΛN (4.5 m.kg) (key 1790-T).
- Tighten the three bolts (1) holding the drive plate to the converter to 20 to 23 mΛN (2 to 2.3 m.kg).
- Remove the bracket 3186-T.

b) *Vehicles fitted with a mechanical clutch :*

Engage a gear.

Offer up the engine to the gearbox, engage the studs to bring the center of the disk into contact with the drive shaft.

Turn the engine flywheel by hand to engage the splines.

Tighten the bolts holding the engine to the gearbox (shakeproof washer) to 45 mΛN (4.5 m.kg).

20. Install the engine-gearbox assembly :

a) Slightly raise the engine-gearbox assembly and remove the chock from under the gearbox housing.

b) Lower the engine-gearbox assembly until the flexible mountings just touch the crossmember.

Fit the bolts (2) holding the flexible mountings and tighten to 40 to 45 mΛN (4 to 4.5 m.kg).

21. Fit the starter motor :

(For vehicles fitted with a torque converter).

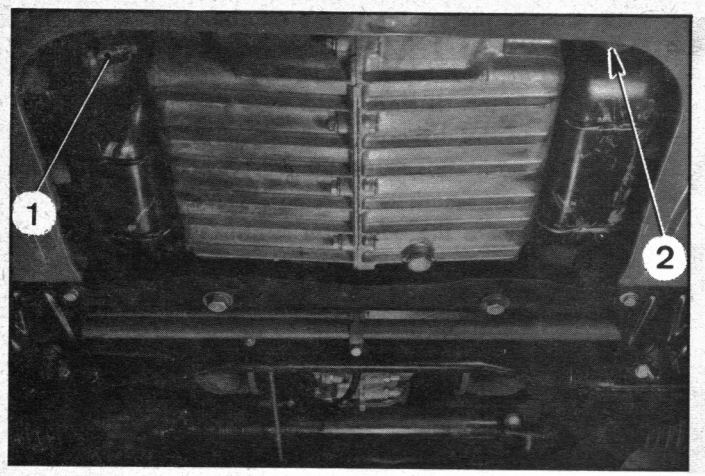

8536

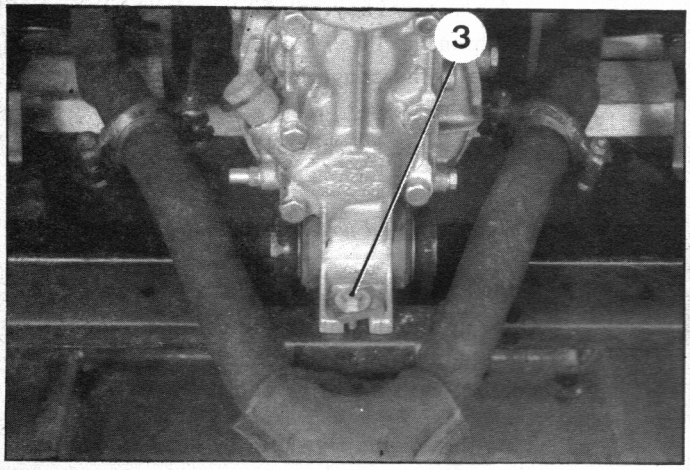

8620

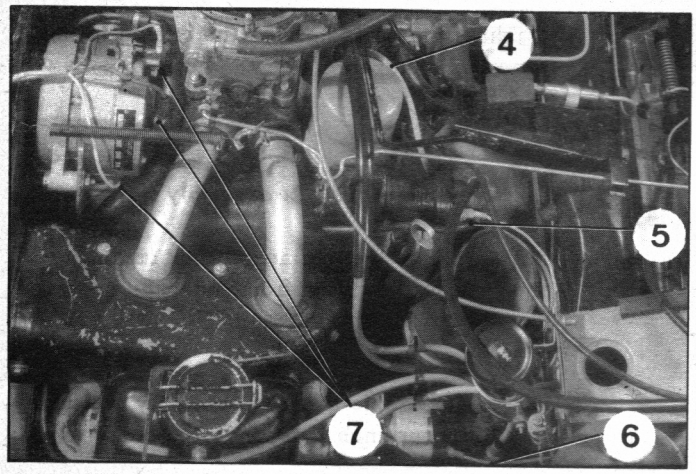

8602

22. Connect up the exhaust pipes :

Fit and tighten the clamps (1) and (2) from 10 to 12 mΛN (1 to 1.2 m.kg).

Tighten the bolt (3) of the central exhaust pipe support on the gearbox.

Fit the closing plates to the lower heater ducts.

Fit the sealing rings to the heater ducts.

23. Connect up the petrol feed :

Remove the blanking bolt and connect the petrol inlet to the pump.

24. Connect up the electrical harnesses :

a) Connect up the leads :
- to the oil pressure warning lamp (4),
- to the starter motor (5) (shakeproof washer),
- to the distributor (6),
- to the coil and distributor (high tension),
- to the oil thermal switch,
- to the alternator (7).

b) *Vehicles fitted with a torque converter :*

Connect the leads to the electro-valve on the control distributor of the converter.

25. Fit the lower finishing panel :

Offer up the panel and bumpers..

At each side; fit without tightening :
- the fixing bolts (8) and (9) on the unit (contact washer),
- the lateral parts of the bumpers,
- the bolts (10) and nuts (11) (flat and shake-proof washers).

Check that the clearance between the lateral parts of the bumpers and the wings is evenly distributed at each side.

Finally tighten all bolts.

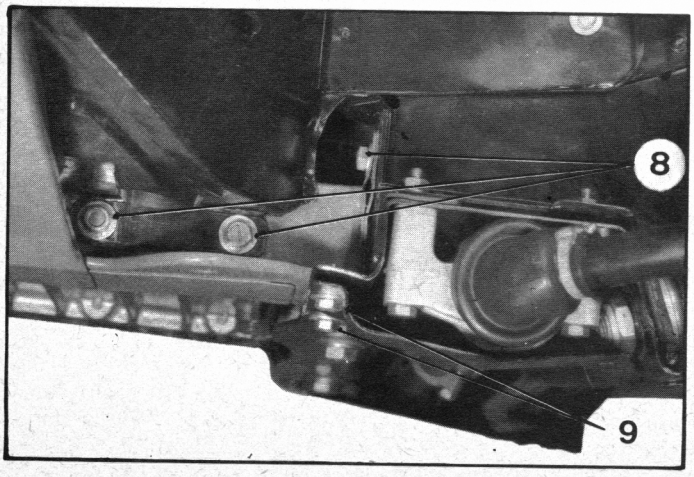

8756

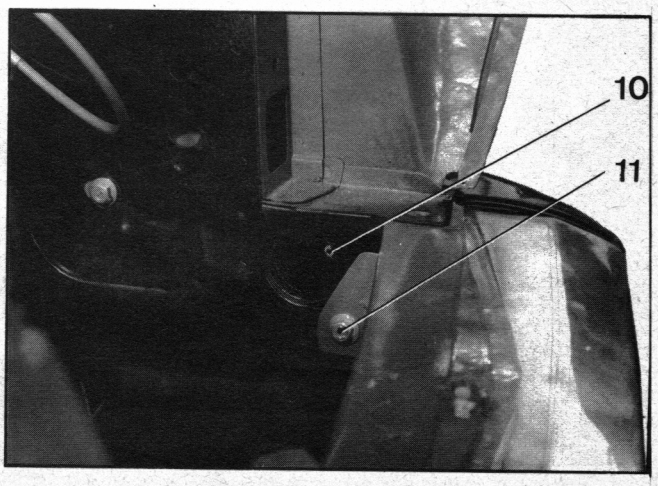

8599

8597

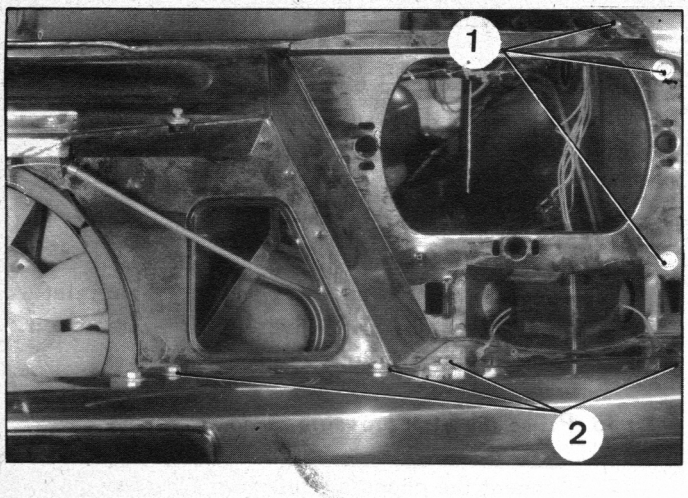

9637

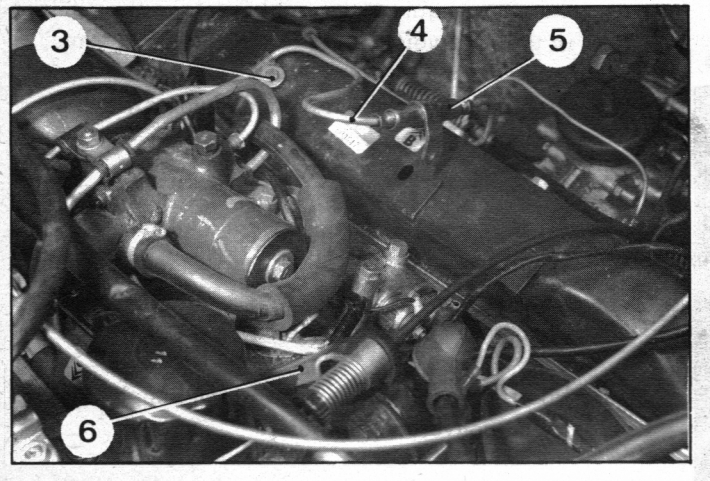

9704

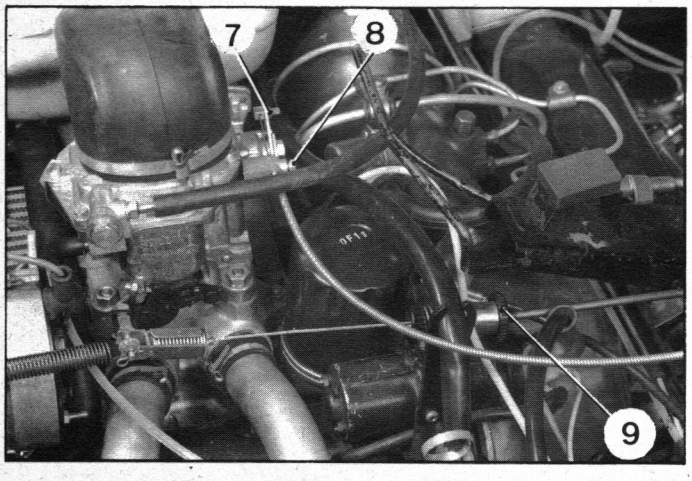

26. Fit the fan panel :

Offer up the panel, slightly inclined to the rear.

On each side, fit without tightening :
- the upper (1) and lower (2) fixing bolts (contact washer).

Finally tighten all bolts.

27. Fit the horn with its bracket.

28. Fit the direction indicator lights and the headlights :

Connect the leads to the indicator lights and install these.
Fit the bonnet locking cable.
Fit the headlights. Fit the locks and turn these to lock them.
Fit the connectors to the headlight bulbs.
Connect up the horn.
Fit the front electrical harness in the clips.

29. Fit the grille :

Engage the lower lugs into the slots.
Insert the upper brackets under the washers.
Tighten the bolts (contact washer).

30. Fit the pressure regulator :

(For vehicles fitted with a torque converter) :

- Fit the pressure regulator.
- Fix the pipe (4) to the union (5) (new seal).
- Tighten the bolts to 18 mΛN (1.8 m.kg).
- Fix the securing clip (3) of the main supply pipe.

31. Connect up the carburettor controls :

a) Fix the sheath support bracket (6).

b) Connect up the throttle cable.

c) Insert the sheath of the choke control cable into its support.
- Lightly tighten the bolt (8).
- Before tightening the cable stop screw (7), leave a clearance of 3 to 5 mm at the knob so that the choke is properly closed.

d) If necessary, adjust the throttle cable tension using the screw (8).

8776

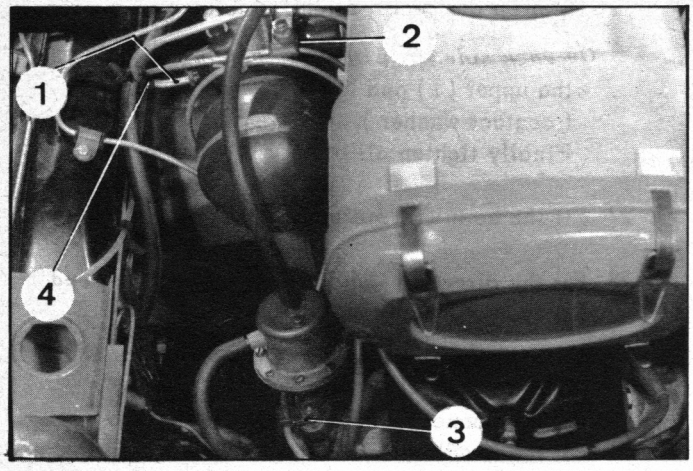

8366

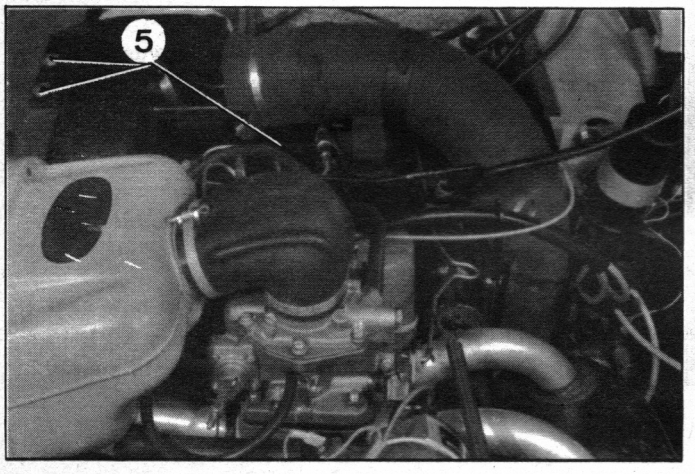

32. Fit the spare wheel support.
Fit the clip which holds the supply tube to the four-way union.

33. Check the engine oil level.

34. Connect up the hydraulic circuits :

Connect the feed-pipe (1) to the pressure regulator (new seal). Fit the clips (2) and (3) and tighten the nuts (contact washer).
Connect the high pressure pump flexible inlet pipe to the tube of the hydraulic fluid reservoir.
Fit the rubber collar (4).

35. Prime the high pressure pump :

Connect the chassis cable to the battery.
Check that the pressure regulator bleed screw is loosened.
Take out the tube and fill it with hydraulic fluid.
Start the engine and quickly replace the tube in the reservoir. Fix it to the righthand wheel arch securing clip.
Tighten the bleed screw and check all unions for leaks.

36. Fit the heater distribution box.
Tighten the bolts (5).
Fit the lefthand heater hose.
Connect up the control cable to the lever.

37. Position the flexible hose which supplies air to the converter oil cooler.

38. Fit and tighten the nut holding the stay to the bonnet. Fit the spare wheel.

39. Lower the vehicle to the ground.

40. Start the engine. Allow it to warm up.
Check (and adjust if necessary) :

- the ignition point,
- the engine idling speed,
- the tightness of the exhaust pipe connections and hydraulic circuit,
- the headlights.

REMOVING AND FITTING A ROCKER SHAFT OR A ROCKER ON THE VEHICLE

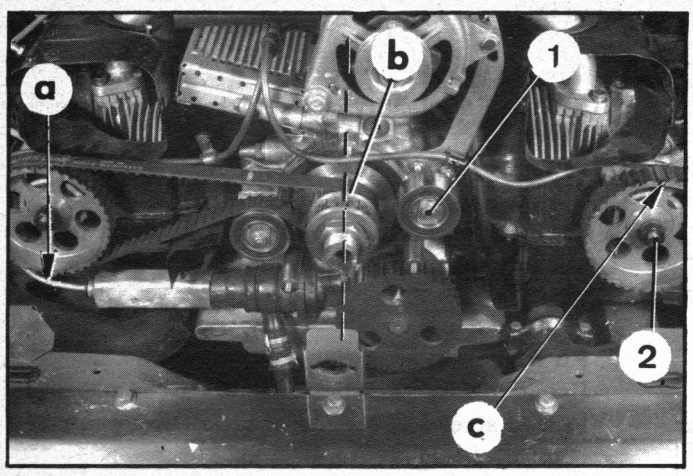

8789

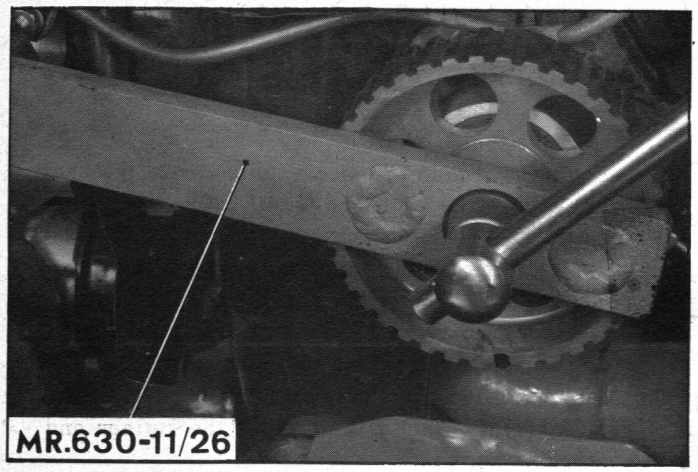

8790

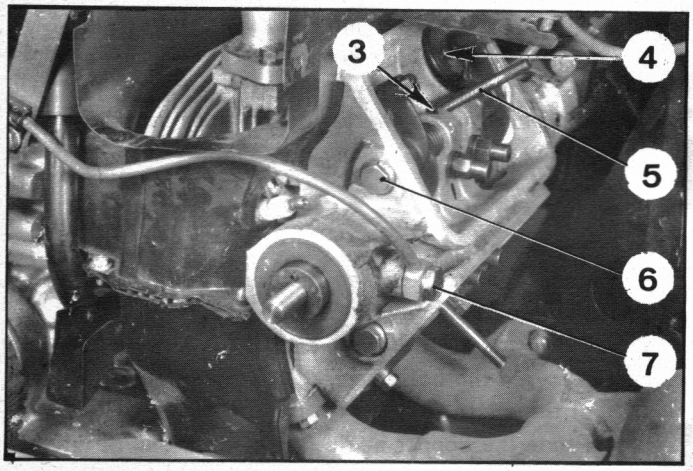

8979

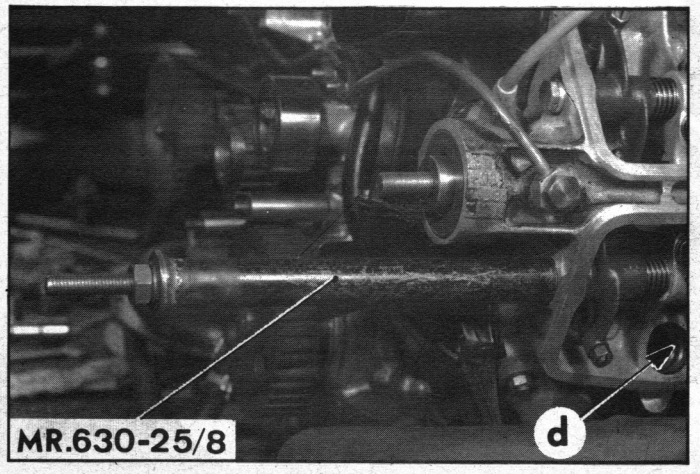

REMOVAL .

1. *Removing the intake valve rocker shaft :* remove the fan panel.
   Removing the exhaust valve rocker shaft : remove the bolt holding the front flexible mountings of the engine, and raise the engine-gearbox assembly.
2. **Remove the fan and the air intake.**
3. **Remove the camshaft wheel :**
   a) Rotate the crankshaft to bring the mark « b » (on the intermediate flange) and the marks « a » and « c » of the wheels into the position shown on the figure.
   NOTE : Take no account of the marks on the driving belts.
   b) Slacken the nut (1). Compress the roller tensioner to release the belt. Retighten the nut (1).
   c) Release the belt from the camshaft wheel.
   d) Remove the nut (2) (tool MR. 630-11/26) and remove the wheel.
   CAUTION : Do not rotate the crankshaft while the belts are not fitted.
4. **Remove the lower and upper cylinder head covers.**
   NOTE : For removing the exhaust valve rocker shaft, remove only the lower cylinder head cover.
   Blank off the hole « d » of the oil return to the cylinder head.
   Rotate the camshaft to release the intake or exhaust valve rockers and slacken them on the shaft (take care not to lose the push rod caps (4) where these exist).
5. **Remove the rocker shaft :**
   Remove the plug (6) at each end.
   Remove the grub screw (3) holding the shaft (3 mm Allen key).
   Remove the stud (5) and the connector bolt (7).
   Extract the shaft using the tool MR. 630-25/8.
   Remove the O-ring seals (10) the caps (9) and (11) and the copper seals (8).
6. **Remove the rocker arms and springs.**

10 564

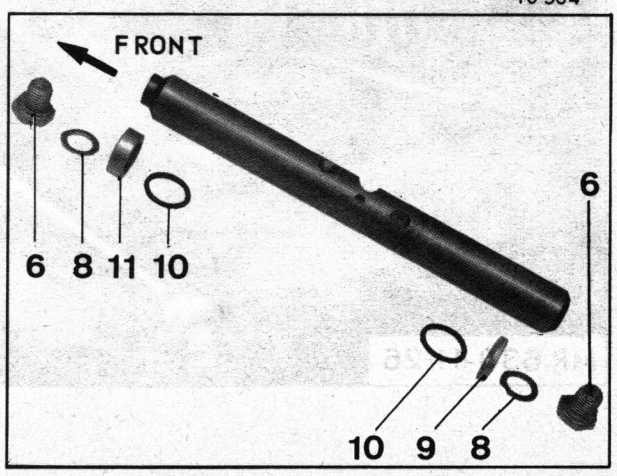

9023

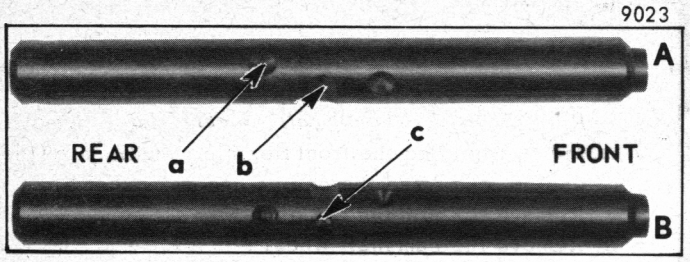

10444

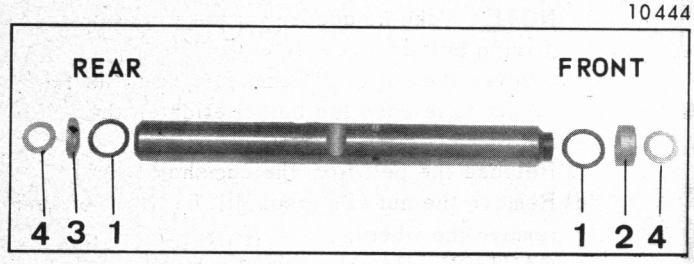

7979

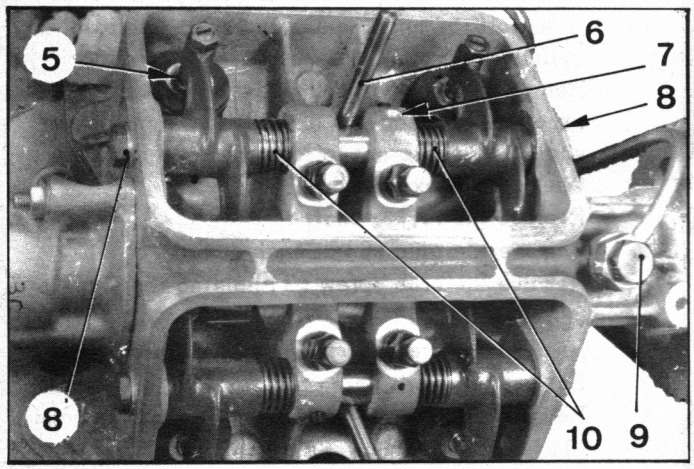

8789

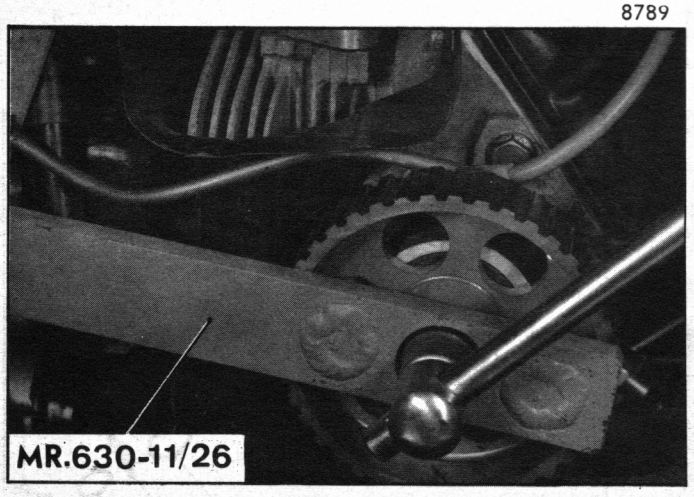

FITTING.

NOTE : For identifying the rocker shafts, see the figure.

- *Shaft A without mark* = left intake or right exhaust.
- *Shaft B marked « c » (blind hole)* = right intake or left exhaust.

7. Fit the rocker arms :

Using grease, stick the caps (5) to the round-headed screws of the rocker arms (where these caps are fitted).

Place the rocker arms and springs (10) in the cylinder head (the springs (10) should be against the central bearing).

8. Fit the rocker shaft :

a) Screw a plug (8) *on the front end* of the shaft.

b) Grease the shaft and insert it in the cylinder head by its rear end.

c) Turn the shaft so that once it is fitted, the groove « b » (for the pin (6) and the cone « a » (for grub screw (7)) are correctly placed.

d) Complete the fitting by lightly tapping the front end of the shaft using a bronze drift.

CAUTION : When fitting, guide the springs and rockers.

e) Fit the stud (6) :

The shortest threaded end must be screwed into the cylinder head.

f) Fit the grub screw (7) :

Smear the threads with LOCTITE N° GX. 01. 459 01 A.

9. Fit the plugs (8) :

(If necessary, replace the plug used during fitting).

Fit *new* O-ring seals (1).

Fit *new* caps : the flat cap (3) is fitted at the rear and the hollow cap (2) « caps » the front end of the shaft.

Place the copper seals (4) at each end of the shaft.

Tighten the plugs (8) to 17 - 18 mΛN (1.7 to 1.8 m.kg).

10. Fit the union screw (9) :

Replace the seals. Tighten to 18 - 20 mΛN (1.8 to 2 m.kg).

11. Fit the camshaft wheel :

Tighten the nut to 82 mΛN (8.2 m.kg).

(Hold the wheel using the tool MR. 630-11/26).

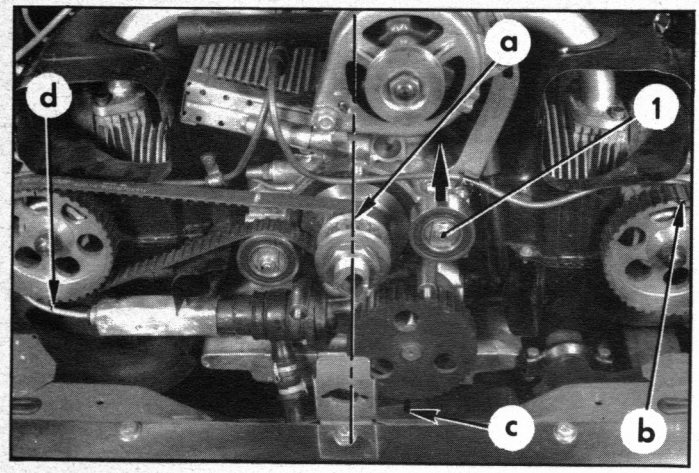

12. Fit the toothed belt :

a) Check that the marks on the crankshaft, camshaft wheels and the oil pump gear are positionned as shown in the above figure.

b) Fit the belt :
For the left-hand belt :
Offer the belt so that :
- the white paint marks on the belt coincide with the marks « a » and « b »,
- the yellow paint mark coincide with the mark « c » on the oil pump gear.

NOTE : Spacing of the marks on the belt :
ab = 32 steps *(engine G 10 (1015 cm3))*
ab = 33 steps *(engine G 103 (1220 cm3))*
ac = 25 steps *(engine G 10 and G 103)*.

For the right-hand belt :
Offer the belt so that the paint marks on the belt coincide with the marks « a » and « b » such that :
ad = 42 steps *on tensioner side (engine G 10)*
ad = 43 steps *on tensioner side (engine G 103)*.

c) Slacken the nut (1) so that the tensioner returns to its original position. Retighten.

13. Set the valve clearances (engine cold) :
Separately adjust the clearance between the tappet of each rocker and *the back of the corresponding cam.*
Intake and exhaust = *0.20 mm*

14. Tighten the two belts :
The marks on the crankshaft and the camshaft wheels must be positionned as shown in the figure.
Rotate the crankshaft through 90° in the normal direction of operation.
Slacken the nut (1) to release the left-hand tensioner roller and retighten it to 18.5 mAN (1.8 m.kg).
Turn the crankshaft by one turn in the normal direction of operation and carry out the same operation for the right-hand tensioner roller.

15. Fit the cylinder head covers :
IMPORTANT : Carefully oil the cams as well as the tappets and round-headed screws of the rockers.

16. If necessary, tighten the bolts holding the front flexible mountings of the engine to 40 tp 45 mAN (4 to 4.5 m.kg).

17. Fit the engine cooling air intake.

18. Fit the fan.
Fit the « starting dog » and its nut *(head face and threads greased)*.
Tighten the nut to 170 to 200 mAN (17 to 2 m.kg) (torque wrench and extension MR. 630-17/1).
Fit and centre the air intake cowl.

19. Fit the fan panel.

20. Check the headlamp adjustment.

21. Check the engine oil level.

REMOVING AND FITTING A TIMING BELT, TENSIONER OR WHEEL

8683

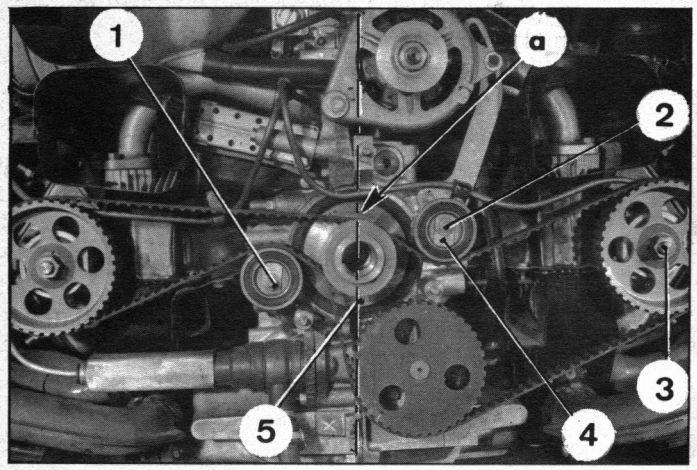

8029

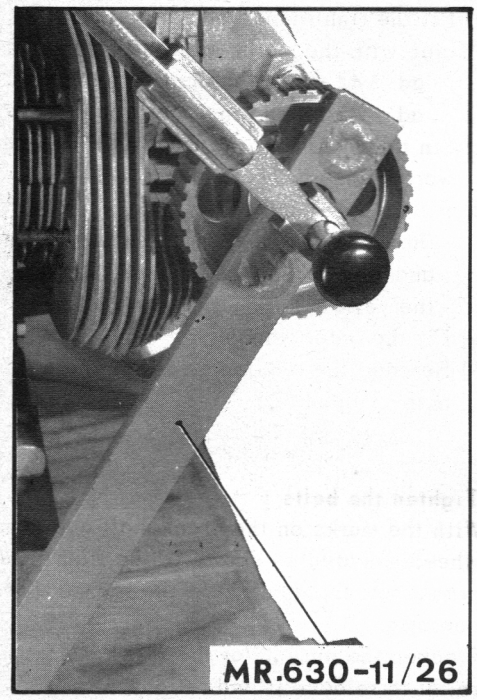

8841

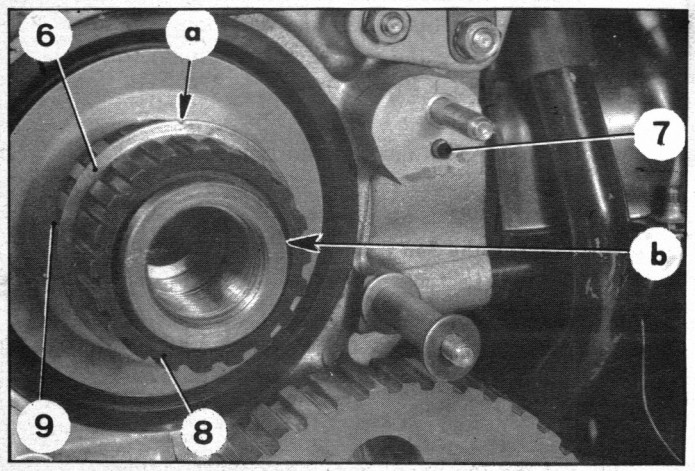

Insert the Mecanindus guide pin (7) into its housing.
Fit the nuts (contact washer).

REMOVAL.

1. Remove :
   - the fan panel,
   - the air intake.
2. **Remove the belts :**
   a) *Set the timing :* Rotate the crankshaft to bring the mark « a » (on the intermediate flange (6)) on the engine centre line, upwards (see figure).
   IMPORTANT : *Leave the crankshaft in this position during the whole operation.*
   NOTE : To remove the right-hand belt, it is necessary to remove the left-hand belt.
   b) Slacken the nuts (1) and (2) on the tensioner rollers.
   - Remove the outer flange (5).
   - Release the left-hand belt by sliding it over the timing gears.

   Remove the right-hand belt in the same way.
3. **Remove the tensioners :**
   NOTE : To remove the tensioners only, it is not necessary to remove the belts.
   - Remove the nuts (1) and (2).
   - Remove the tensioners (Do not lose the bearing plates (4)).
4. **Remove the timing gears and wheels :**
   Remove the gears (8) and (9) and the intermediate flange (6) from the crankshaft (Do not lose the key)).
   Remove the nuts (3). Prevent the wheel from rotating by means of tool MR. 630-11/26.
   Remove the camshaft wheels.

FITTING.

NOTE :
- the two camshaft wheels,
- the two crankshaft gears (8) and (9),
- the two flanges (5) and (6),
- the two tensioner rollers,

are identical.
IMPORTANT : Before fitting, make sure that the bolts, wheels, gears and tensioner rollers are completely free of grease or oil.

5. **Fit the timing wheels and gears :**
   a) Fit the camshaft wheels :
   Fit the wheel on each camshaft (positioning pin).
   Tighten the nut (flat washer) to 82 mAN (8.2 m.kg) (torque wrench) (use tool MR. 630-11/26).
   b) Fit the gears to the crankshaft :
   Fit the gears (9) and (8), interposing the flange (6) (key) on the crankshaft.
   CAUTION : Fit the gears so that :
   - *gear (8) has the groove « b » facing outwards,*
   - *gear (9) has the groove « b » facing the engine casing.*
6. **Fit the tensioners :**
   Fit the tensioners (bearing plate (4) to the outside).

Manual 810-2

8030

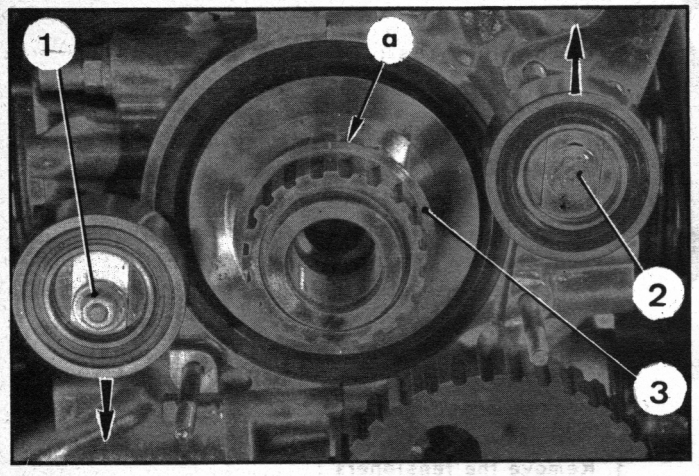

7. Fit the belts :

NOTE :

- the right-hand belt (the shorter) has two white paint marks at « a » and « d », so that :
  ad = 42 steps tensioner side *(engine G 10)*
  ad = 43 steps tensioner side *(engine G 103)*
- the left-hand has two white paint marks at « a » and « b » and a yellow paint mark at « c » so that :
  ab = 32 steps *(engine G 10)*
  ab = 33 steps *(engine G 103)*
  ac = 25 steps *(engines G 10 and G 103)*

a) *Set the timing :*
The mark « a » (engraved on the intermediate flange (3)) being on the engine centre line, facing upwards, position the marks « b », « c » and « d » of the wheels as shown in the figure.

b) Compress the tensioner rollers (direction of the arrows).
Tighten the nuts (1) and (2).

c) Fit the right-hand belt so that its marks coincide with the marks « a » and « d » such that :
ad = 42 steps tensioner end *(engine G 10)*
ad = 43 steps tensioner end *(engine G 103)*
(in this position, the mark « d » faces downwards).

d) Fit the left-hand belt so that :
- the white marks coincide with the mark « a » and « b »,
- the yellow mark coincides with the mark « c »

e) Fit the outer flange (4).

f) Release the tensioner rollers and tighten the nuts (1) and (2).

8683

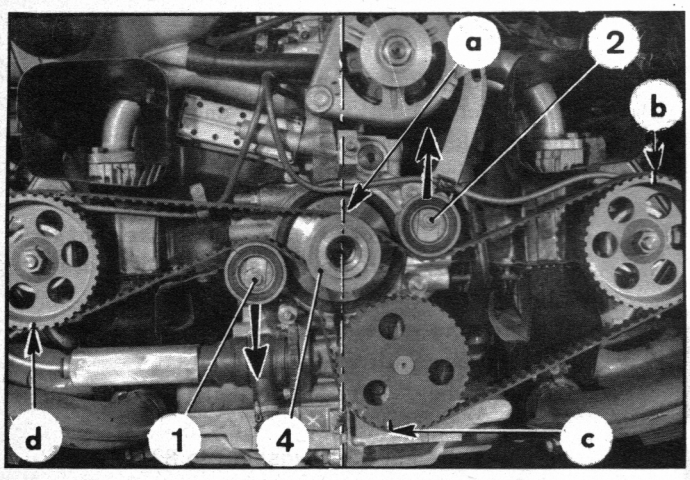

8. Tighten the belts :

With the marks on the crankshaft and camshaft wheels located as shown in the figure, turn the crankshaft through 90° in the normal direction of operation.
Slacken the nut (2) of the left-hand tensioner roller to release it and retighten to 18.5 mAN (1.8 m.kg).
Rotate the crankshaft by one turn in the normal direction of operation and carry out the same operation for the right-hand tensioner roller.

9. Fit the air intake and the fan.

10. Tighten the fan :

Grease the threads of the « starting dog » and the back of the nut.
Tighten the nut to 170 to 200 mAN (17 to 20 m.kg) (torque wrench and extension MR. 630-17/1).

11. Fit the fan panel and check the headlamp setting.

REMOVING AND FITTING A CAMSHAFT ON THE VEHICLE.

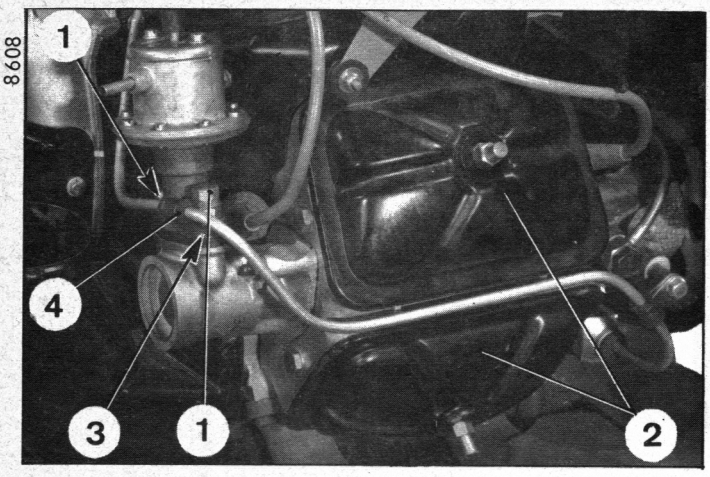

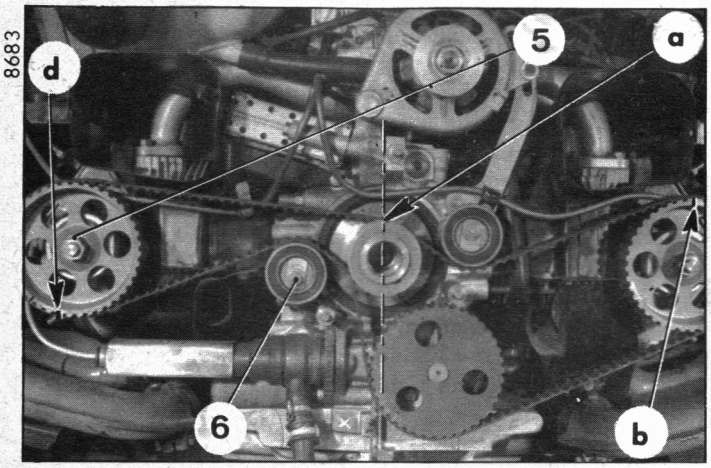

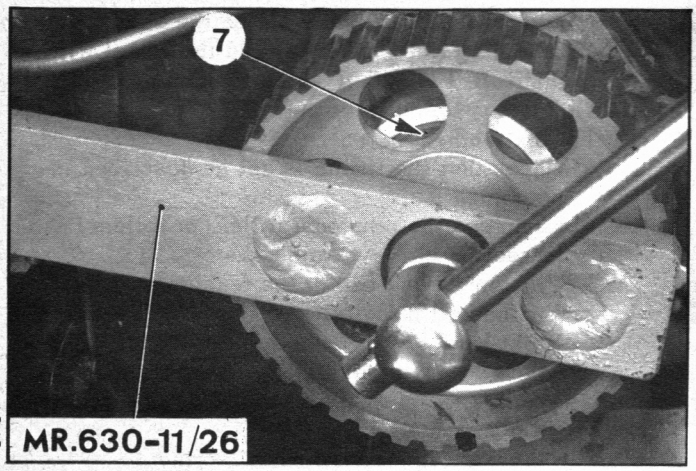

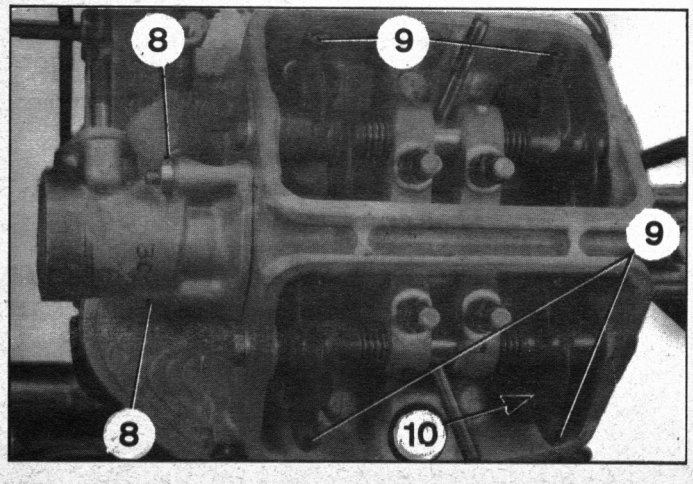

Manual 810-2

REMOVAL.

1. Remove :
   - the fan panel,
   - the bolts holding the front flexible mountings of the engine.

2. **Remove the fan and the air intake :**
   Use tool MR. 630-17/1 for removing the fan.

3. **Remove the cylinder head covers :**
   Remove the plug leads.

4. **Remove the petrol pump (or the distributor) :**
   a) *For the right-hand camshaft :*
   Remove the clip (4).
   Remove the nuts (1).
   Free the pump and the spacer (3).
   Remove the studs on which the pump is mounted.
   Move the engine as far as possible to the left (so that the camshaft can be passed between the heater duct and the axle unit).
   NOTE : For removing the right-hand camshaft, it is necessary to remove the preheater tube from the intake box (on engines so fitted).
   b) *For the left-hand camshaft :*
   Remove the distributor.

5. **Set the timing :**
   NOTE : Take no account of the paint marks on the timing belts.
   Turn the engine so that :
   - the mark « a » (on the flange between the two gears) faces upwards on the engine centre line.
   - the marks « b » and « d » on the wheels are in the position shown in the figure.

   CAUTION : *Do not rotate the crankshaft during the whole operation.*

6. **Remove the wheel from the camshaft to be replaced :**
   Slacken the nut (6) of the tensioner roller at the correct side.
   Remove the belt from the camshaft wheel.
   Remove the nut (5) (hold the wheel using the tool MR. 630-11/26).
   Remove the wheel.

7. **Remove the camshaft :**
   Completely slacken the rocker ball-screws (9).
   CAUTION : *Do not lose the ball caps (10) where these are fitted.*
   Remove the nuts (8) holding the bearing.
   Use a mallet, lightly tap the end of the camshaft to free the bearing.
   Remove the camshaft, taking care not to foul the cams on the rocker heels.

8. **Remove the seal (7).**

9581

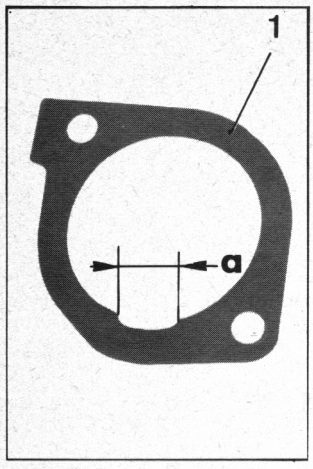

9580

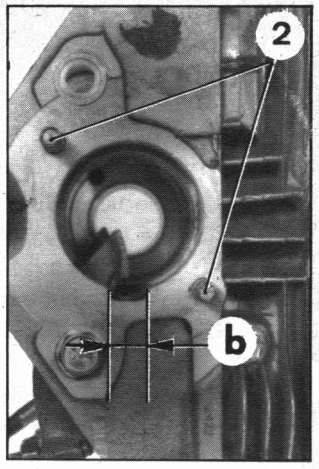

7926

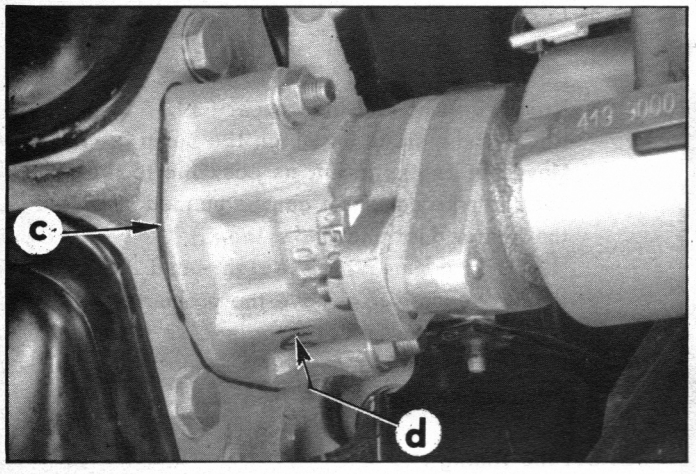

8978

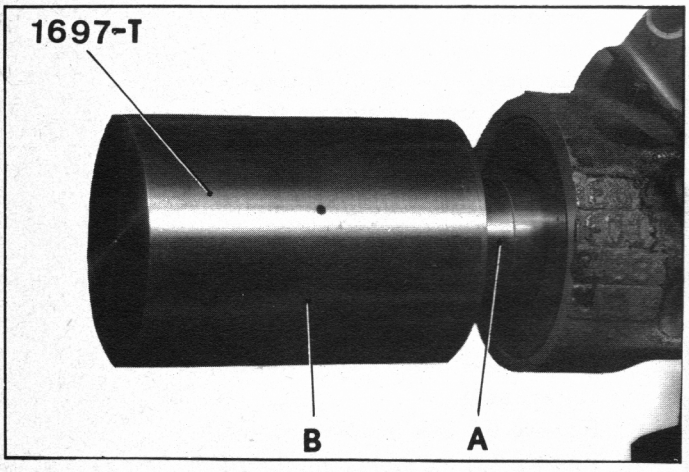

8683

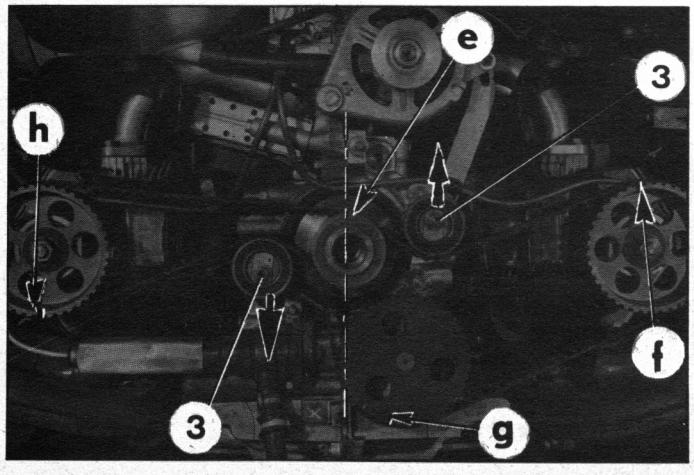

FITTING.

9. Clean the bearing faces of the camshaft bearing housing and the cylinder head at « c ».
Oil the rings and the bearing.

10. **Fit the camshaft :**
a) Fit the paper seal between the rear camshaft bearing and the cylinder head :
Fit the seal (1) on the studs (2) *so that the groove « a » of the seal coincides with the oil return groove « b » of the cylinder head.* Fit the seal dry.
b) Engage the camshaft in the cylinder head.
IMPORTANT : *Position the rear bearing : the boss « d » (oil return) of the bearing must correspond with the groove « b » of the cylinder head. In other words, it must be facing the exhaust openings.*
For the right-hand cylinder head, this means directing the petrol pump mounting studs towards the intake openings.
c) Tighten the nuts (contact washer) to 15 - 18 mΛN (1.5 to 1.8 m.kg).

11. **Fit the front seal :**
Oil the front seal where it touches the camshaft.
Use the tool 1697-T : screw the inlet cone A on the stud at the end of the camshaft.
Oil the cone and offer up the seal (take care to fit it the right way round).
Complete the fitting of the seal by means of the cap B, tapping lightly until it comes up against the cone A.
Remove the tool.

12. **Fit the camshaft wheel :**
Place the wheel on the end of the camshaft (be careful of the positioning pin on the shaft).
Fit the nut (flat washer) : Hold the wheel with tool MR. 630-11/26. Tighten to 82 mΛN (8.2 m.kg) torque wrench.

13. **Fit the toothed belt :**
a) Check that the timing is set as described in paragraph 5.
b) Compress the tensioner roller (or rollers) (direction of the arrows).
Tighten the nut (3) of the tensioner roller.
c) Fit the belt or belts :
Right-hand belt. Fit the belt so that :
- the two white paint marks coincide with the mark « e » on the crankshaft (on the intermediate flange),
- the mark « h » of the wheel so that :
eh = 42 steps tensioner end (engine G 10)
eh = 43 steps tensioner end (engine G 103)

Left-hand belt. Fit the belt so that :
- the two white paint marks coincide with the marks « e » on the crankshaft and « f » on the wheel,
- the yellow paint mark coincides with the mark « g » on the oil pump gear :
ef = 32 steps tensioner end (engine G 10)
ef = 33 steps tensioner end (engine G 103)
eg = 25 steps tensioner end (engine G 10 and G 103).

d) Slacken the nuts on the tensioner rollers to release them and then retighten.

8608

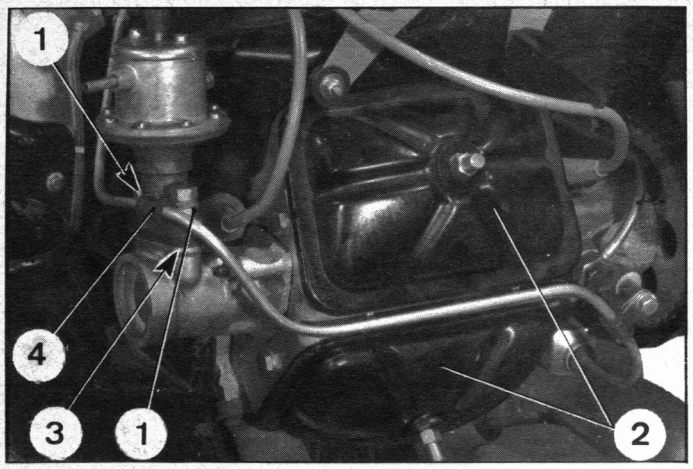

8683

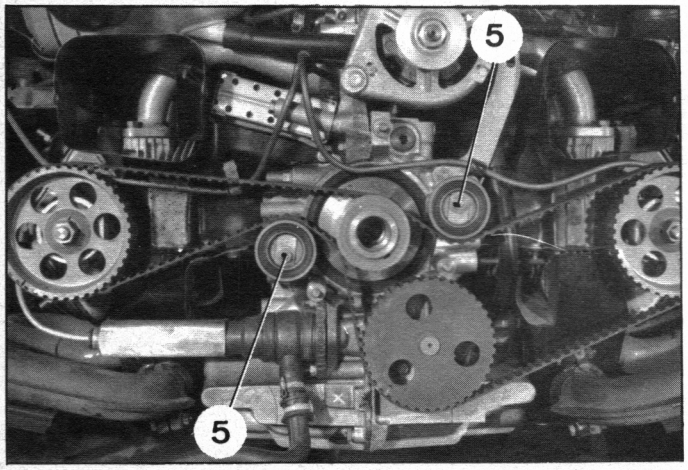

8374

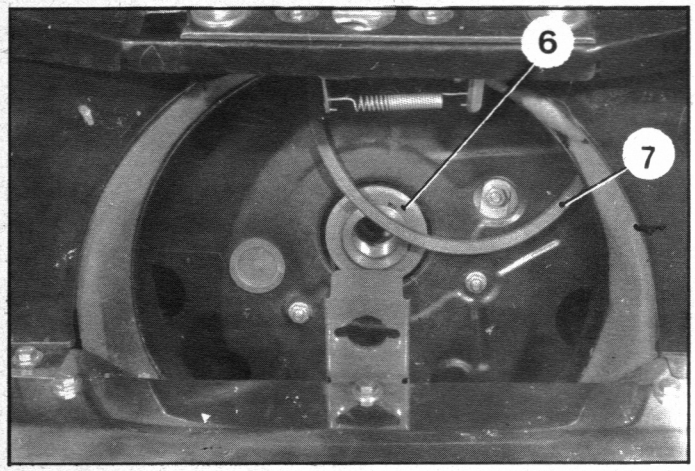

8369

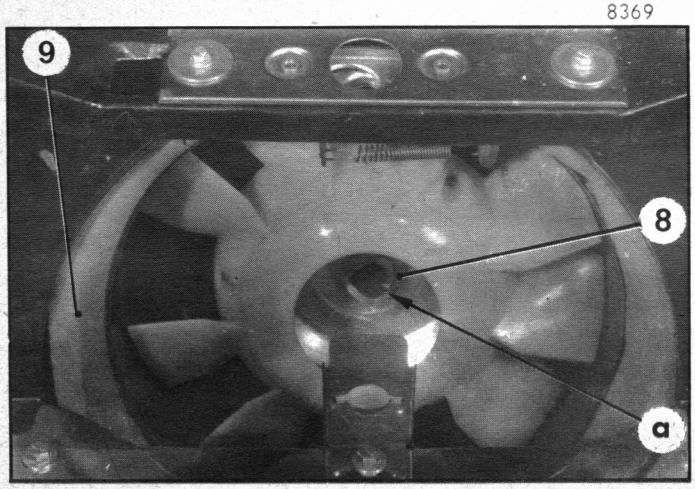

14. **Set the valve clearances :**
Check that the ball caps are in position (where these are fitted).
Separately set the clearance between the heel of each rocker and the back of the corresponding cam.
Intake and exhaust — 0.20 mm

15. **Fit the cylinder head covers :**
IMPORTANT : *Carefully oil the cams.*
Fit the lower and upper cylinder head covers (2) (they are different). Tighten the nuts to 8 to 10 mN (0.8 to 1 m.kg).
Fit the plug leads.

16. **Tighten the belts :**
Check that the timing is set as described in paragraph 5.
Rotate the crankshaft through 90° in the normal direction of operation.
Slacken the nut (5) on the left-hand tensioner roller in order to release it and retighten to 18.5 mN (1.8 m.kg).
Rotate the crankshaft through one turn in the normal direction of operation and repeat the same operation for the right-hand tensioner roller.

17. **Fit the petrol pump (or the distributor) :**
a) *For the right-hand camshaft :*
Fit the petrol pump studs.
Fit the pump.
Fit the spacer (3) (dry fitting).
Offer up the pump (take care with orientation : see figure). Fit the clip (4). Tighten the nuts (1) (contact washer) to 21 mN (2.1 m.kg).
b) *Left-hand camshaft :*
Fit the distributor (do not tighten the nuts ; setting will be carried out after replacing the accessory plate).

18. **Fit the engine cooling air intake.**

19. Fit the air intake cowl, *without tightening it.*

20. **Fit the fan :**
Check that the flange (6) is in position.
Offer up the fan and insert the alternator belt (7) in the pulley groove.
Fit the « starting dog » (*the « starting dog » and the nut must have the face and threads greased*).
With the engine at the point of ignition, the « starting dog » should be horizontal.
Check that about 5 mm of threads are visible at «a» after adjustment.
Tighten the lock nut (8) to 170 to 200 mN (17 to 20 m.kg) (torque wrench and extension MR.630-17/1).
Centre the air intake cowl on the fan to give correct clearance at the blades. Tighten the bolts.
Glue the cowl seal (9) in position (COLFIX 180).

21. Fit the accessory support plate.

22. Tighten the bolts holding the front flexible mounting of the engine to 40 to 45 mN (4 to 4.5 m.kg).

23. Replace the filter cartridge.
Drain the oil from the engine and fill up with new oil.

24. Check the setting of the distributor if necessary.

25. Check the headlamp setting.

REMOVING AND FITTING A PUMP DRIVE (OR SEAL) OR AN OIL PUMP ON THE VEHICLE.

8683

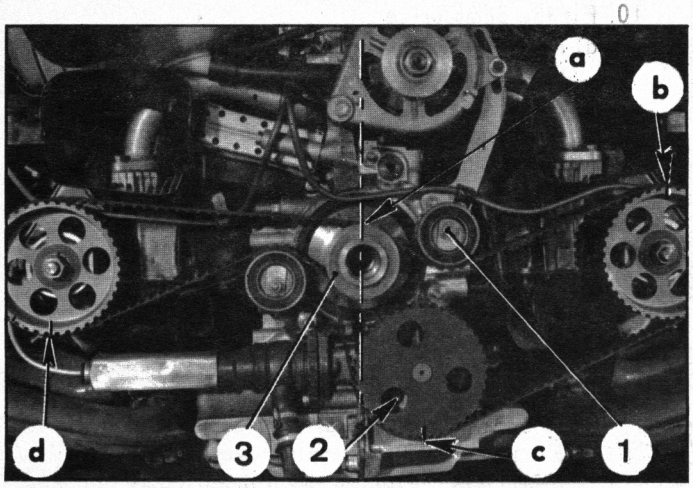

8608

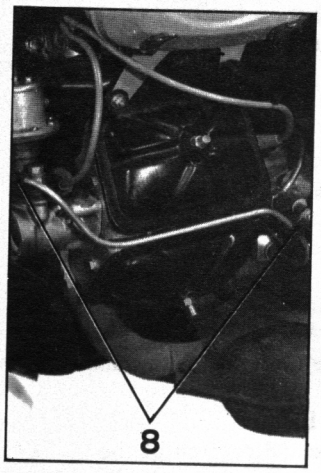

8793

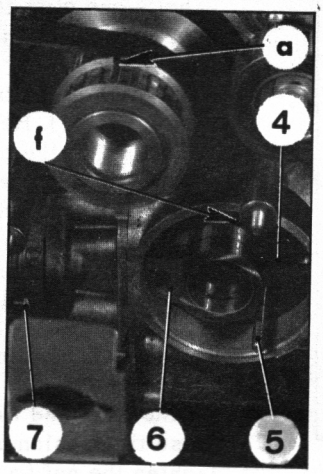

Manual 810-2

8794

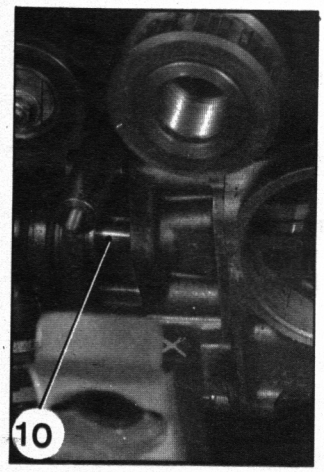

8795

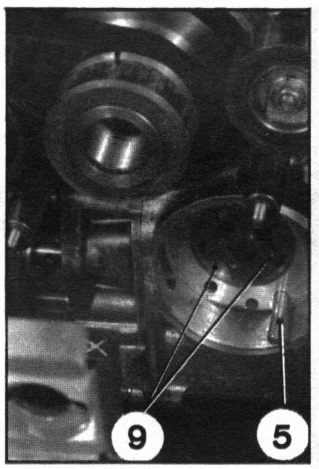

8001

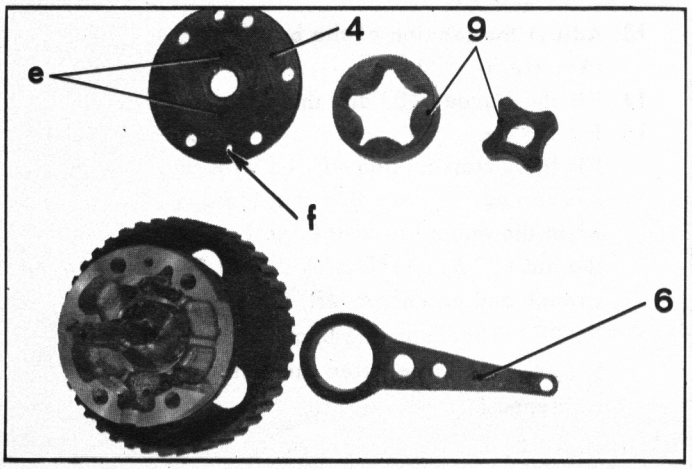

REMOVAL.

1. Remove :
   - the fan panel,
   - the fan (extension MR. 630-17/1),
   - the air intake.

2. Slacken the pressure regulator bleed screw.

3. **Remove the left-hand timing belt :**
   a) *Set the timing :*
   Turn the engine so that the mark « a » (engraved on the flange between the crankshaft gears) faces upwards on the engine centre line.
   The marks « b, c, d » are then placed as shown in the figure.
   IMPORTANT : *Take account only of the marks engraved on the gears and wheels (and not of the painted marks on the belts).*
   b) Slacken the nut (1) on the tensioner roller. Release the outer flange (3) and remove the belt.

4. **Remove the oil pump drive :**
   Remove the five bolts (2).
   CAUTION : Extract the drive, by levering on two diametrically opposed points of the pulley to avoid damaging the pump bearing.

5. **Remove the high pressure pump control rod :**
   Remove the bolt holding the clips (8).
   Remove the nuts (7) holding the pump.
   Move the pump sufficiently to obtain access to the spindle (10) : drive out the spindle by hand (take care of the pump piston).
   Release the rod (6).

6. **Remove the oil pump gears :**
   Remove :
   - the closure plate (4),
   - the gears (9).

FITTING.

IMPORTANT : Make sure that the belts, tensioners or timing wheels are completely free of oil or grease.

7. **Oil and fit the oil pump gears :**
   NOTE : On casings not fitted with a guide stud (5), it is recommended to fit one temporarily to assist positioning the plate and the pump drive.

8. **Fit the closure plate (4) :**
   The recesses « e » should be inside and the small hole « f » to the top.

9. **Install the high pressure pump rod (6).**

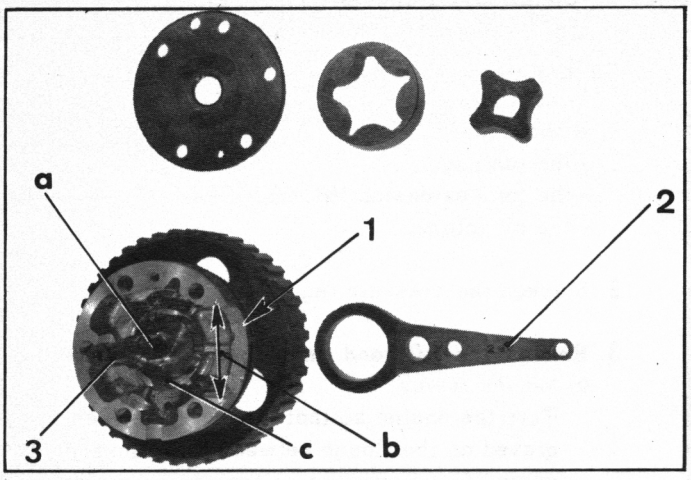

8001

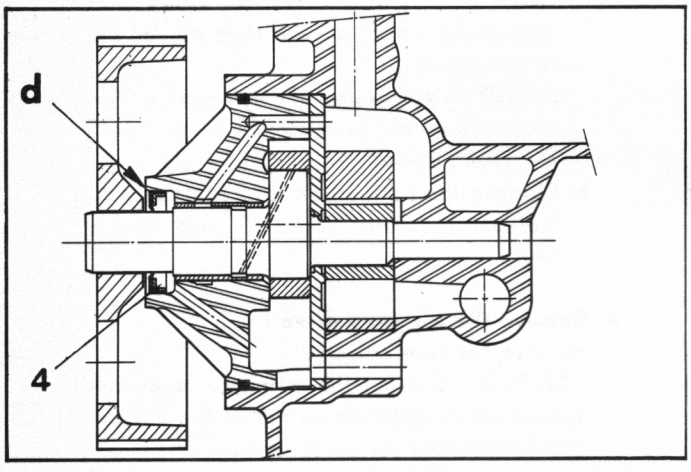

G. 22-2

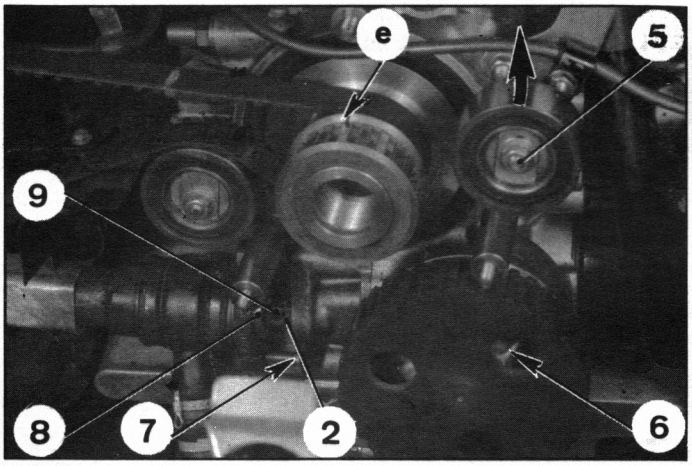

8796

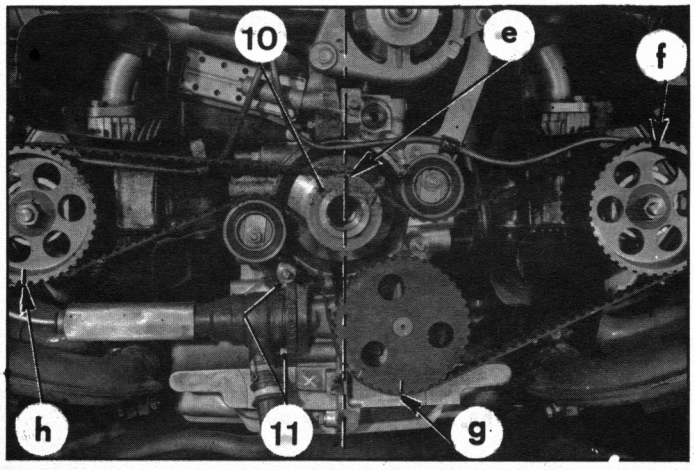

8683

10. **Fit the pump drive :**
    a) Replace the O-ring seal (1).
    Oil the spindle (3) and the eccentric « c ».
    b) Place the shim 4001-T between the wheel and the bearing at « d » to avoid depressing the seal (4).
    c) Present the pump drive to the guide stud (the groove « b » for the rod should face the high pressure pump) and engage the spindle in the central gear.
    Turn the spindle so that the flat part « a » engages in the oil pump gear.
    d) Push the piston into the liner (8) of the high pressure pump and guide the rod (2) in order to engage it on the driving eccentric.
    Fit the bolts (6) (contact washer).
    CAUTION : Tighten the diametrically opposed bolts one after the other, a fraction of a turn at a time, until the pump drive is properly positioned.
    Tighten the bolts (6) to 15 - 18.5 mAN (1.5 to 1.8 m.kg). Remove the shim 4001-T.
    Check that the pump drive rotates freely.
11. **Install the high pressure pump :**
    If necessary, replace the O-ring seal (7).
    Release the piston (brass hook) and fit the spindle (9).
    Fit the pump, and tighten the nuts (11) (contact washer) at 12.6 to 14 mAN (1.2 to 1.4 m.kg).
    Fit the clips holding the high pressure pump tube.
12. **Fit the left-hand timing belt :**
    Raise the tensioner roller (direction of the arrow).
    Tighten the nut (5).
    a) *Set the timing :*
    Check that the mark « e » (engraved on the flange) is in the position described in paragraph 3 a).
    Position the marks « f » and « g » as shown in the figure.
    b) Fit the belt so that :
    - the two white paint marks on the belt coincide with the marks « e » and « f »,
    - the yellow paint mark on the belt coincides with the mark « g ».

    IMPORTANT : *Check the position of the marks by counting the number of teeth on the belt :*
    - ef = 32 teeth *Engine G 10 (1015 cm3)*
    - ef = 33 teeth *Engine G 103 (1220 cm3)*

    The marks in « e » and « g » must be separated by 25 teeth.
13. **Adjust the tension of the belts.**
    (See Op. G. 122-4).
14. Fit the flange (10) and the air intake.
15. **Fit the fan :**
    Fit the « starting dog » fitted with the nut *(face and threads greased)* so that the dog is horizontal when the engine is at the ignition point. Tighten the nut to 170 to 200 mAN (17 to 20 m.kg) (torque wrench and extension MR. 630-17/1).
    NOTE : The « starting dog » should have 4 to 5 threads visible after the nut has been tightened.

STRIPPING AND ASSEMBLING A GEARBOX

(for exchange or repair)

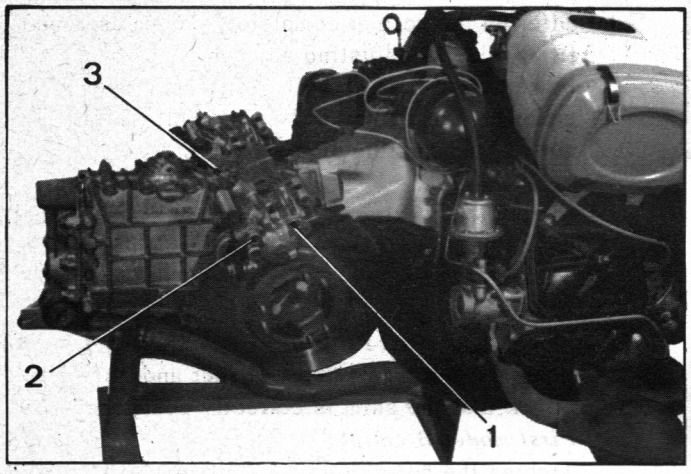

STRIPPING

1. Remove the calipers and the brake discs :

a) Remove :
- the connection tube (3),
- the main brake pads.

b) Release the rear fixing bolts (2)
Loosen the front bolt (1).
Tip the caliper upwards (be careful of the shim placed between the caliper and the gearbox casing).
Fit and tighten a nut (10 × 1.50) on the bolt (2) (to prevent the half-shells from separating from one another).
Remove the bolt (1).

c) Remove the brake discs.

d) Remove the disc fixing studs.

2. Remove the clutch release and its control :

Remove :
- the thrust bearing,
- the clutch fork pin,
- the fork and its spring.

3. Clean the parts.

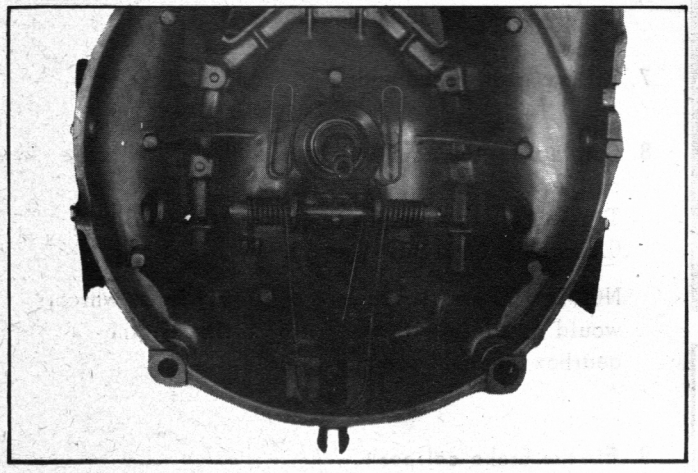

ASSEMBLING

4. Fit the clutch release and its operating mechanism :

Fit the clutch fork and its spring. Fit the shaft and its stop screw.
Fit the thrust bearing and its fastener.

5. Fit the brake discs :

Fit the fixing studs, tighten them to 4 mΛN (0.4 m.kg) and fit the brake discs.
Fit two fixing nuts of the discs by interposing the spacers to hold them in place. Tighten the nuts.

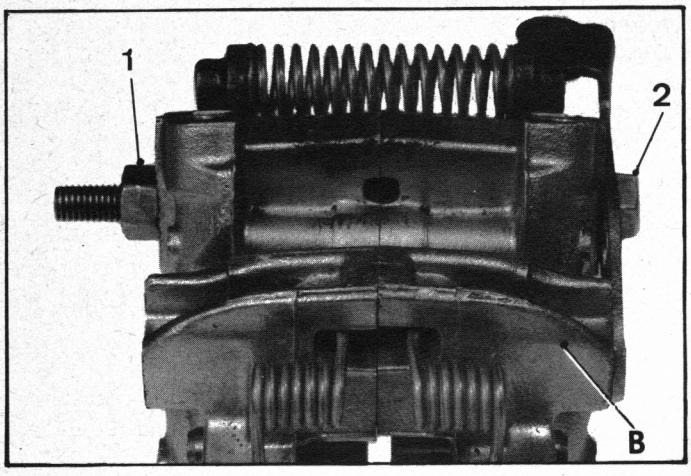

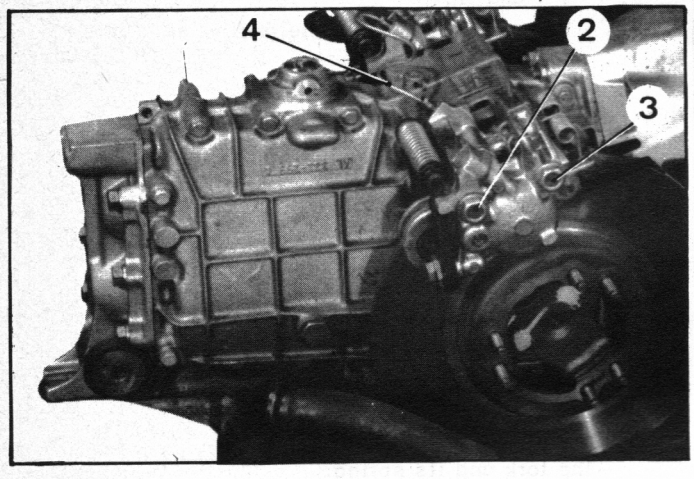

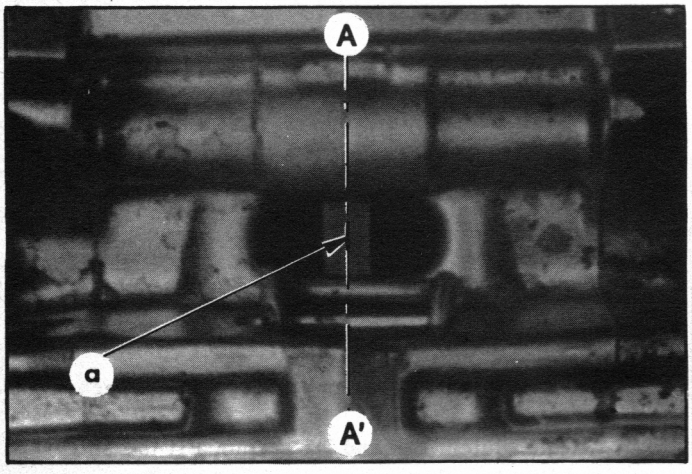

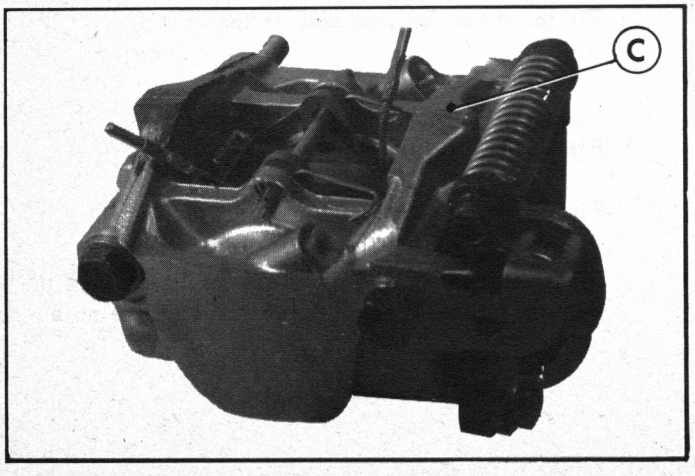

6. Fit the brake caliper *(Vehicles fitted with brake caliper, first model B) :*

IMPORTANT : The shim (or shims) placed between the caliper and the gearbox serve to position the caliper in relation to the brake disc, it is necessary to check this position at each exchange of disc or caliper.

a) Check the condition of the bearing surface of the caliper on the gearbox housing. Remove burrs with a scraper.

b) Offer up the caliper completely assembled and fitted with an adjusting shim and emergency brake pads (the two half-shells have been assembled and tightened by the bolt (2) and nut (1) used in the dismantling).

c) Fit the front fixing bolt (3); screw it up without fully tightening (flat washer under the head).

d) Remove the nut (1). Pivot the caliper and tighten the bolt (2) (flat washer under the head) Check that the shim is correctly positioned.
First model B caliper :
Tighten the bolts to 45 to 50 mΛN (4.5 to 5 m.kg)
Second model C caliper :
Tighten the bolts to 60 mΛN (6 m.kg).

e) Make a marking « a » on the disc equidistant from the two faces.

Check that this marking is aligned with the joint faces A - A' of the two half-shells.

The displacement between these two faces should not exceed 0.5 mm. Otherwise, change the thickness of the shims placed between the brake unit and gearbox.

7. Fit the main brake pads.

8. Connect up the connecting tube (4) of the brake calipers.
Tighten the connection to 8 to 9 mΛN (0.8 to 0.9 m.kg). (Fit new seals).

NOTE : Do not fit the fork operating lever which would interfere with the fitting of the engine-gearbox assembly on the vehicle.

9. Fit the brake caliper *(Vehicles fitted with second model C brake calipers) :*

The fitting is identical to that for the old models, but there is no shim placed between the brake caliper and the gearbox.

I. REMOVING AND FITTING A LEVER OPERATING THE SELECTOR FORK SHAFTS

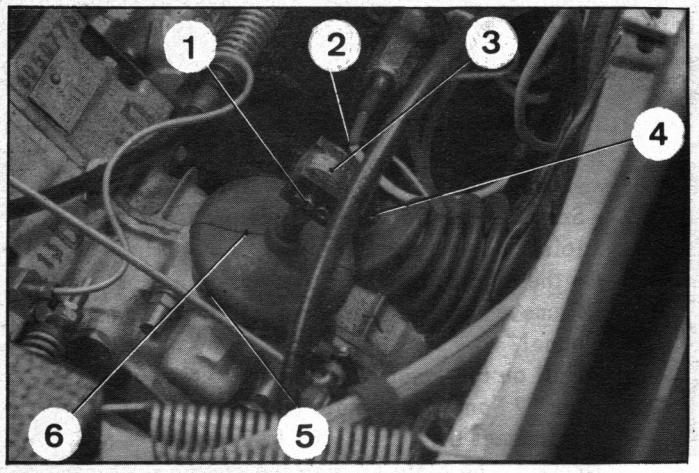

REMOVAL.

1. Remove the spare wheel.

2. **Disconnect the gear change tie-rod :**
   Remove :
   - the pin (1),
   - the spindle (2),
   - the collar (5).

   Separate the tie-rod (4) from the ball joint (3).
   Pull the dust excluder (6) upwards.

7025

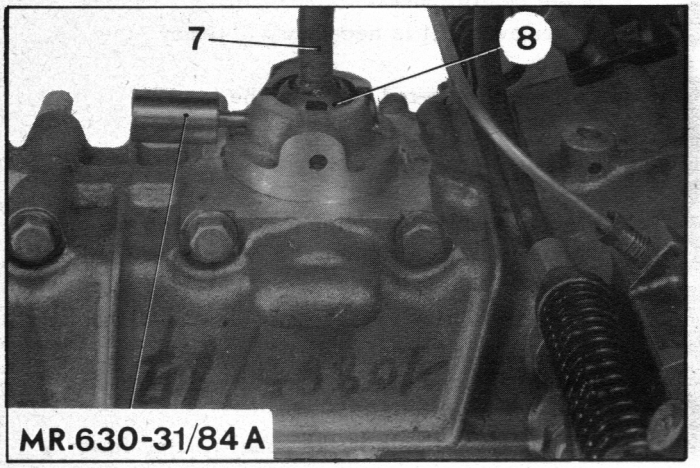

3. **Remove the selector fork shaft operating lever :**
   By means of tool MR. 630-31/84 a, remove the Mecanindus pin (9) linking the lever (7) to the ball joint.
   Release the operating lever (7).
   NOTE : The use of the tool MR. 630-31/84 a allows the pin (9) to be left in position on the ball joint (8).

FITTING.

Manual 810-2

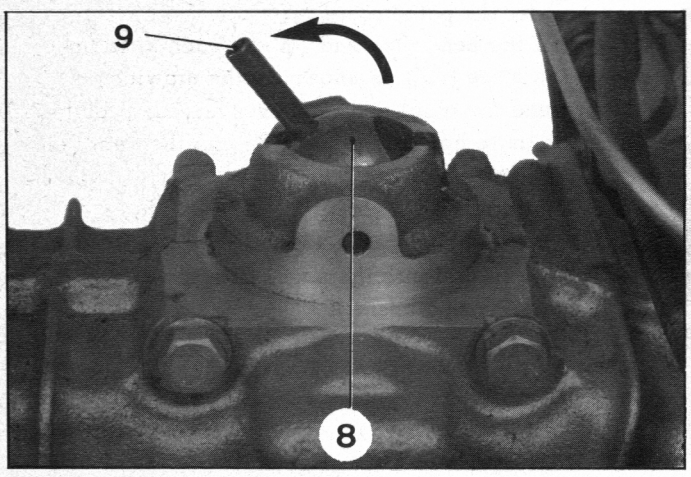

7024

4. **Fit the selector fork shaft operating lever :**
   To facilitate positioning the Mecanindus pin (9) turn the ball joint (8) through 180° so that the pin is towards the rear (direction of the arrow).
   Fit the lever to the ball joint (8).
   Push the Mecanindus pin (9) once again to the front using the tool MR. 630-31/84 b until the body of the tool is bearing against the gearbox housing.
   IMPORTANT : With the tool MR. 630-31/84 b it is possible to adjust exactly the position of the pin (9) in the ball joint (8).
   If this position is incorrect, the pin might interfere with the movement of the ball joint and damage the gearbox housing.

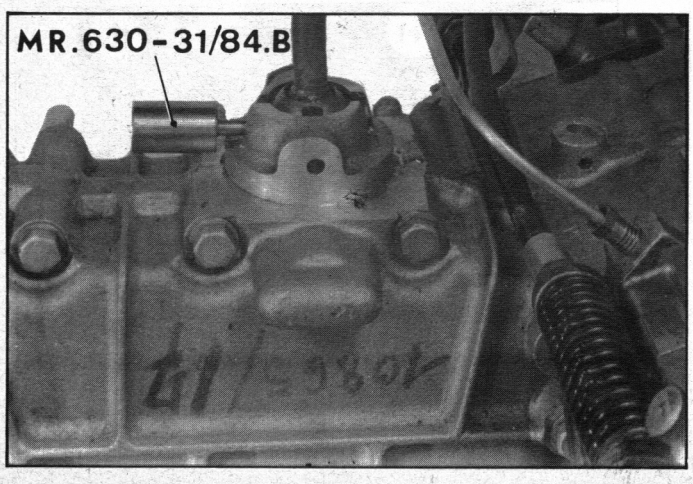

7025

5. **Connect up the selector fork shaft operating lever to the tie-rod :**
   Fit the tie-rod (4) into the ball joint (3).
   Fit the spindle (2) and the pin (1).

6. Replace the spare wheel.

II. REMOVING AND FITTING A GEAR LEVER

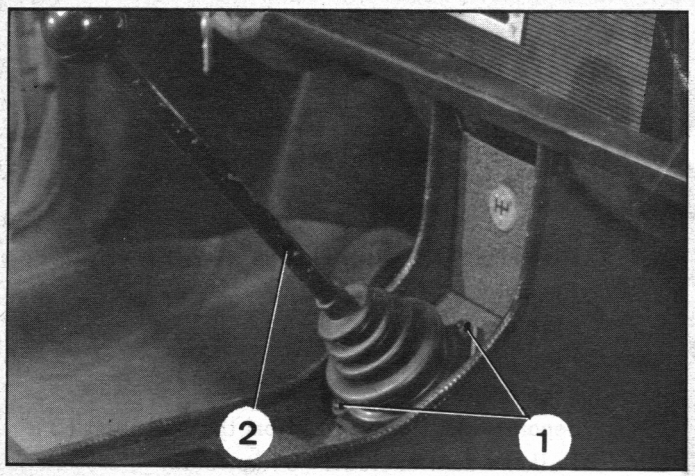

8872

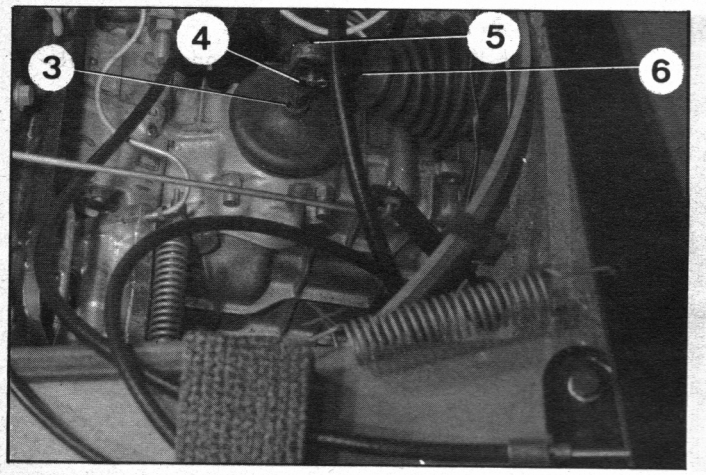

8447

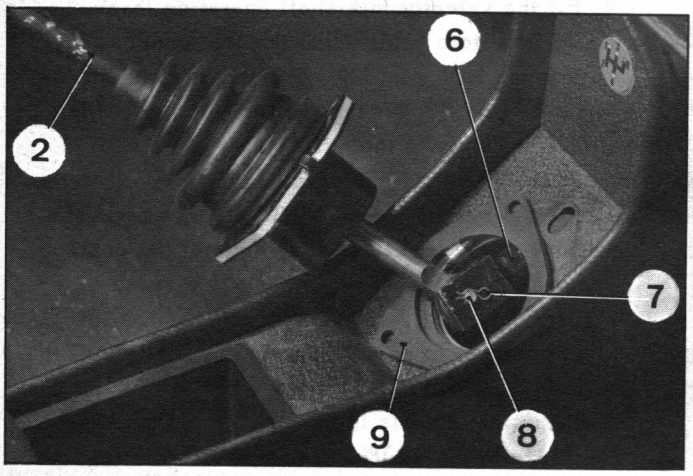

9181

REMOVAL.

1. Remove the spare wheel.
2. On the gearbox :
   - Remove the pin (4) and the spindle (5).
   - Separate the tie-rod (6) from the lever ball joint (3).
3. On the central panel :
   - Remove the bolts (1) holding the casing to the panel.
   - Pull on the lever (2) in order to remove the pin (7) and the spindle (8).

   Disconnect the tie-rod (6) from the lever (2).
   NOTE : The plate holding the casing remains in the central panel.
   To remove it, it is necessary to remove the panel.
4. Release the tie-rod (6) from the front.

FITTING.

5. **Prepare the plate holding the casing on the panel :**
   To facilitate positioning the casing, proceed as follows :
   a) Cut two strips (9) 10 mm wide and 40 mm long from 0.5 mm steel sheet.
   b) Bend the end « b » of each strip back over a length of about 10 mm.
   c) Through the hole in the panel, fit the lower seal (11) and the plate (12) holding the casing under the panel plate (10).
   Fit the bent back end « b » of each strip under the plate (12) as shown on the drawing.
   Bend the other end « a » over the panel plate (10) so as to hold the plate (12) and the seal (11) against the panel.
6. **Fit the tie-rod :**
   Place the rubber dust excluder over the tie-rod.
   Fit the tie-rod into the panel from the front.
   (engine compartment).

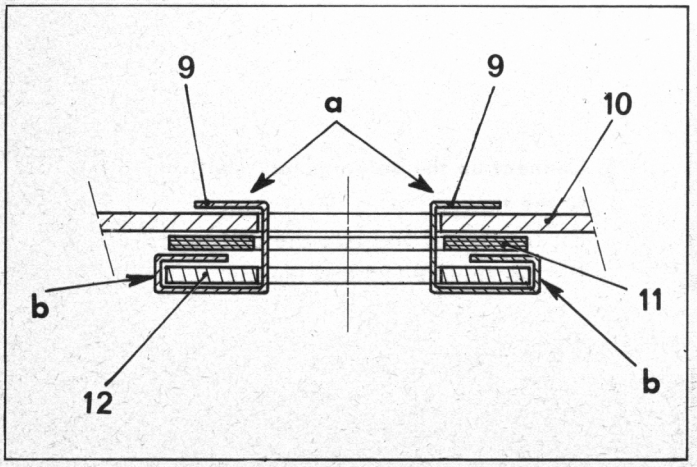

G. 33-12

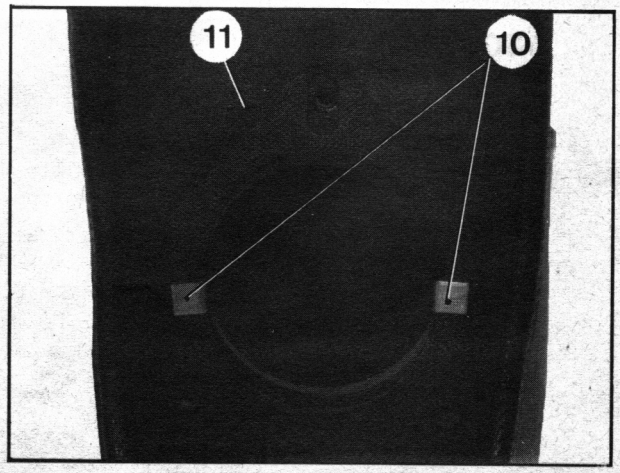

9134

9182

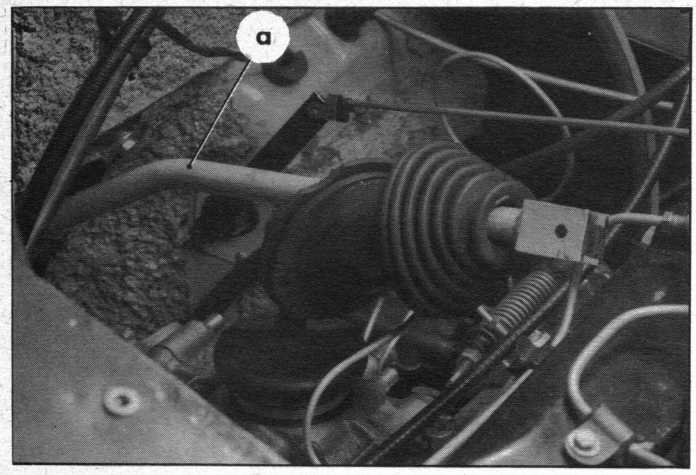

9181

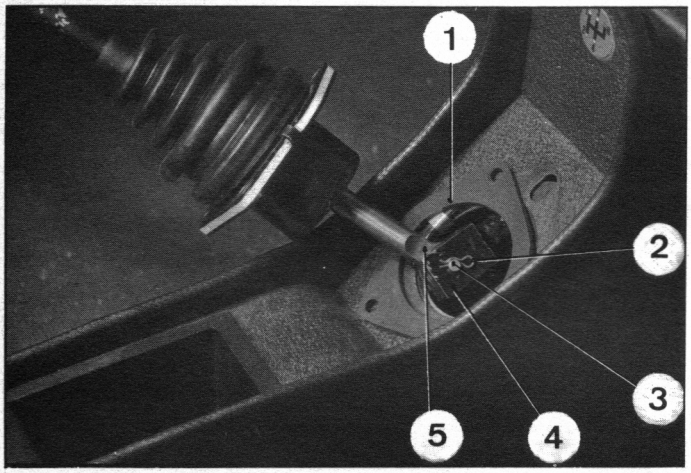

8987

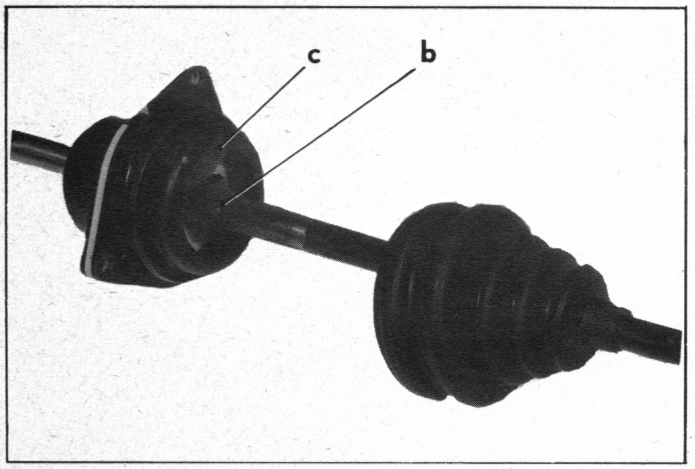

8447

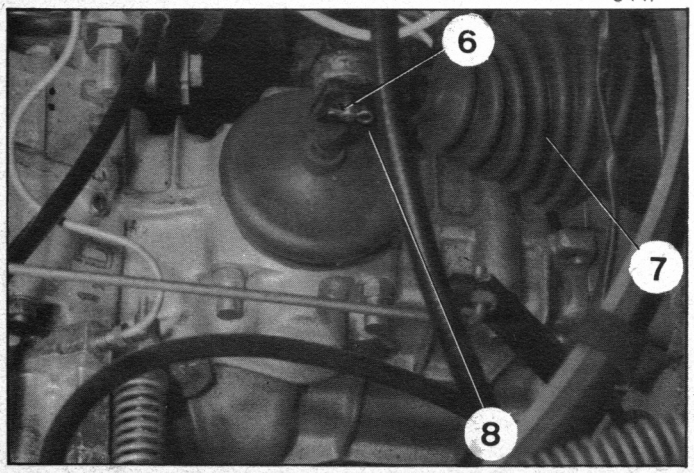

8872

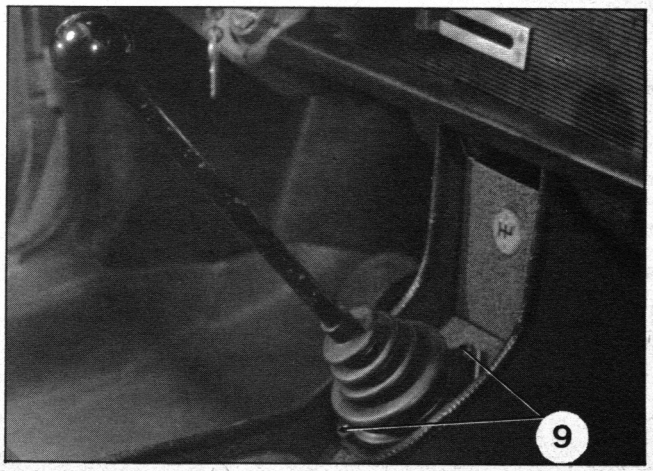

7. Connect the tie-rod to the levers :

Check that the curved part « a » of the tie-rod faces upwards.

a) *Panel side :*
Fit the rubber seal (1) to the panel.
Engage the ball joint of the lever (5) into the yoke of the tie-rod (4).
Fit the spindle (3) and the pin (2).
CAUTION : *The reverse gear stop lug « b » must face to the right (on lever which are so fitted).*

b) *Gearbox side :*
Fit the yoke of the tie-rod (4) into the ball joint of the selector fork shaft operating lever.
Fit the spindle (6).
Fit the pin (8).
Insert the dust excluder (7) into its housing behind the dashboard.

8. Fit the gear lever and casing assembly to the panel :

Turn the flat « c » of the casing to the right-hand side (reverse gear stop side).
Fit the casing into its housing on the panel.
Tighten the bolts (9).
Fit the dust-excluder to the casing.
Check that when second gear is selected, the gear lever does not touch the casing or the driver's seat.

9. Replace the spare wheel.

REMOVING AND FITTING A DIFFERENTIAL SHAFT
(or a bearing or seal)

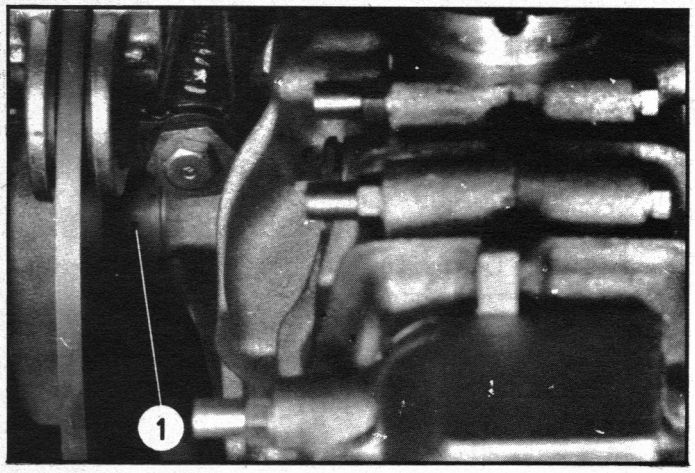

8611

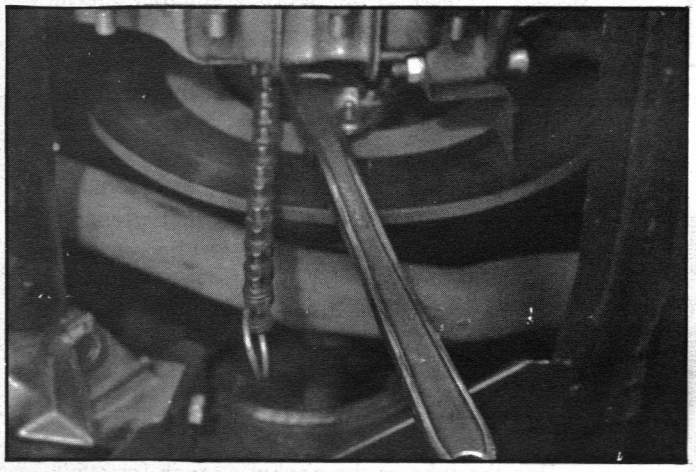
9228

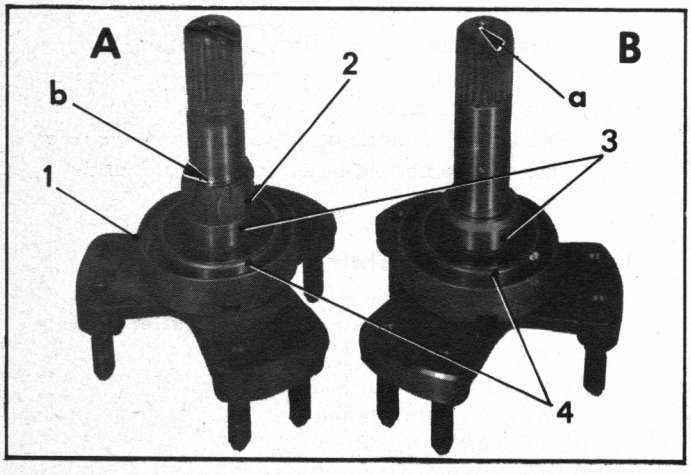

11244

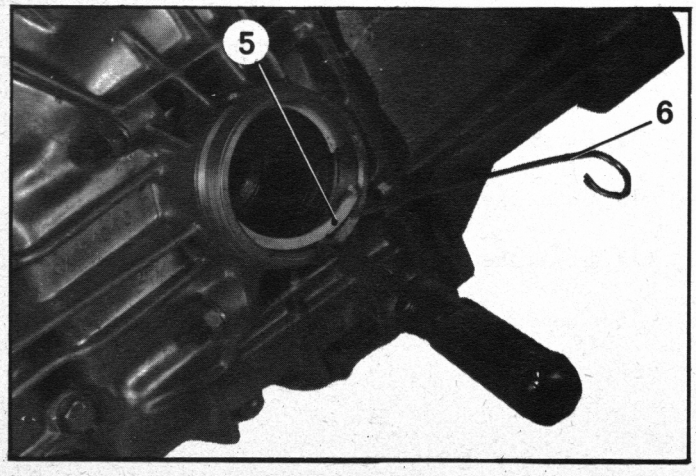

11266

Manual 810-2

REMOVAL.

1. Remove the spare wheel.

2. Chock up the front of the vehicle with the wheels off the ground.

3. Disconnect the cable from the negative terminal of the battery.

4. Remove the brake disc.

5. From underneath the vehicle, slacken the ring nut (1) from the gearbox bearing (chain wrench).

6. Free the differential shaft.

7. **Remove the sealing ring from the gearbox housing :**

   a) *Gearboxes fitted with differential shafts with a nut (type A fitting).*
   Free the ring by means of a screwdriver bearing on the collar of the gearbox bearing.

   b) *Gearboxes fitted with differential shafts without nut (type B fitting).*
   Remove the circlip (5).
   Free the circlip from its recess after lifting it, using the tip of a screwdriver. Hold it with a hook (6) to complete the removal.
   Press the sealing ring against the differential casing and release it by hand.

8. Strip the differential shaft :
   Grease the visible part « b » of the threads *(type A fitting)* and remove the nut (4) : for this purpose use a universal extractor, bearing underneath the ring nut (1), as close as possible to the shaft.

   NOTE : The extractor should have central screw fitted with a ball to avoid damaging the end « a » of the shaft.

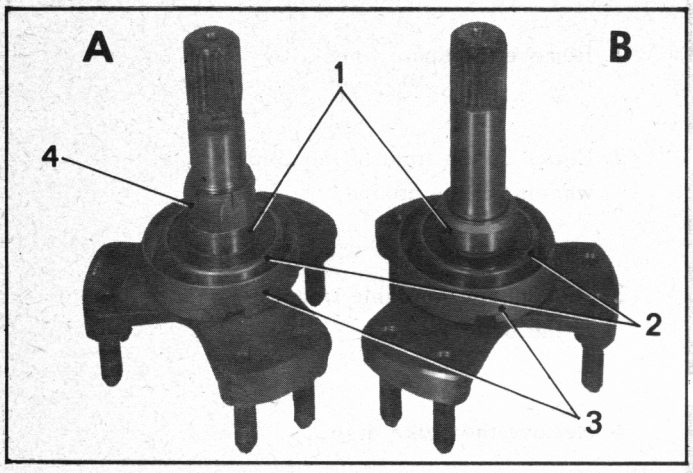

11244

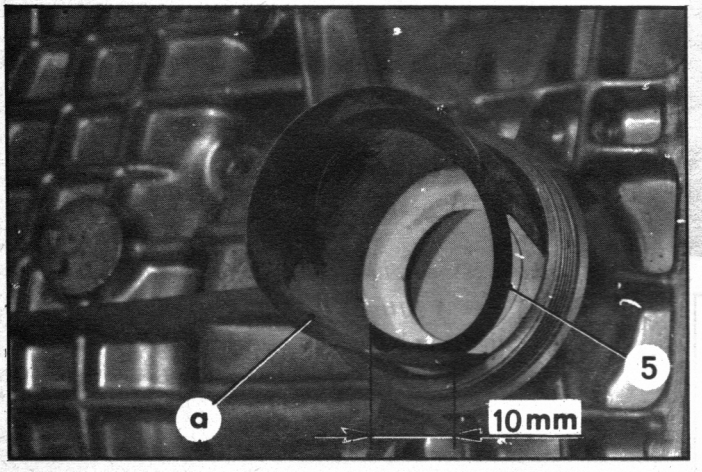

11247

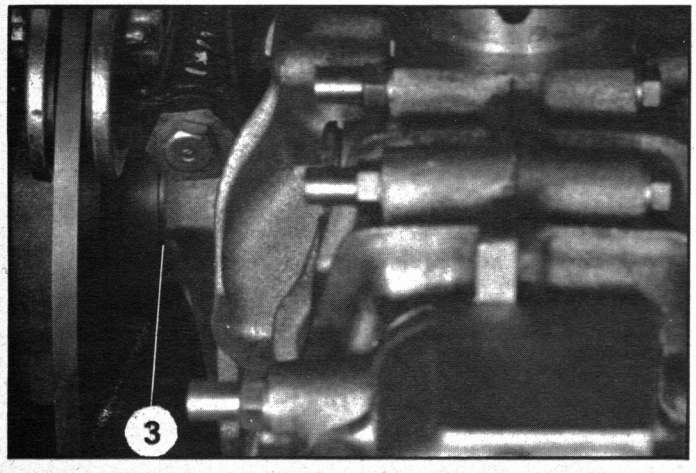

8611

FITTING.

9. Prepare the shaft :
Fit :
- the ring-nut (3),
- the seal bearing (2) (with a press, using a tube with internal diameter 26 mm, outside diameter 34 mm, length 120 mm),
- the ring (1).
IMPORTANT : The ring (1) (on which the seal bears) must show no trace of scratching or impact, otherwise it must be replaced.
Fit the nut (4) *(type A fitting)* and tighten it to 140 to 160 mΛN (14 to 16 m.kg).

10. **Fit the differential shaft seal :**
Grease the bore of the gearbox housing and the area around the seal.
a) *Gearboxes without bearing circlip :*
Fit the seal using the mandrel included in the kit 3184-T.
b) *Gearboxes with bearing circlip :*
Position the seal using a tube of external diameter 51 mm or a 36 mm socket wrench. Push the seal as far as the circlip recess.
Insert the circlip (5) into the bore using a piece of foil « a » with the following dimensions :
- length = 150 mm
- width = 50 mm
- thickness = 0.2 mm
Use the tube or the socket wrench for positioning it.
Remove the foil and finish inserting the circlip and the seal by means of the mandrel used for gearboxes without circlips.
NOTE : For facilitating removal, the nose of the circlip should be 10 mm from the drain hole.

11. **Fit the complete shaft :**
Engage the splines of the shaft in those of the planet gear. Strike lightly with a mallet to help position the bearing (2).
Tighten the ring-nut (3) to 60 to 100 mΛN (6 to 10 m.kg) (chain wrench).
IMPORTANT : *Output shaft with nut (type A fitting) : while tightening the ring, do not rotate the shaft (risk of damaging the lip of the seal).*
Lock the ring (3) by peening in the corresponding countersinking of the housing.

12. Fit the brake disc.

13. Check the oil level in the gearbox.

14. Lower the vehicle to the ground.

15. Connect the cable to the negative terminal of the battery.

16. Fit the spare wheel.

REMOVING AND FITTING A HIGH PRESSURE PUMP

8776

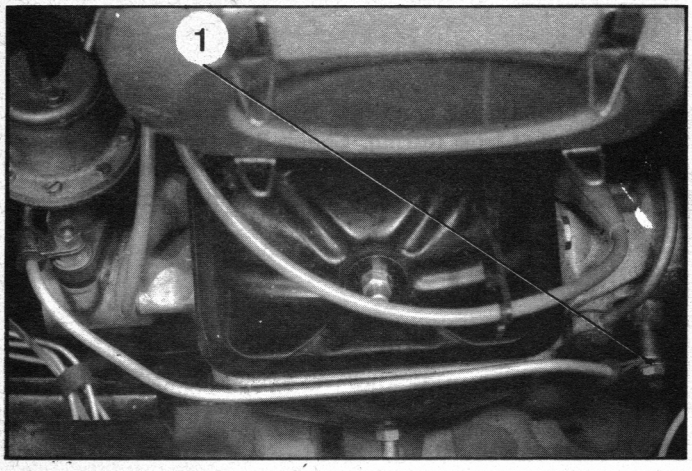

8791

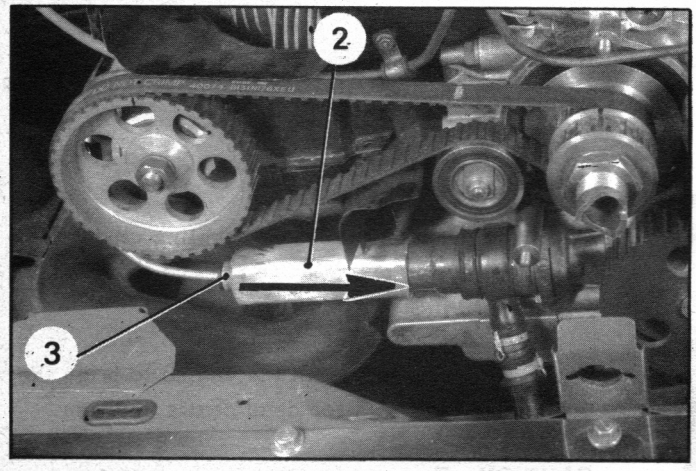

8787

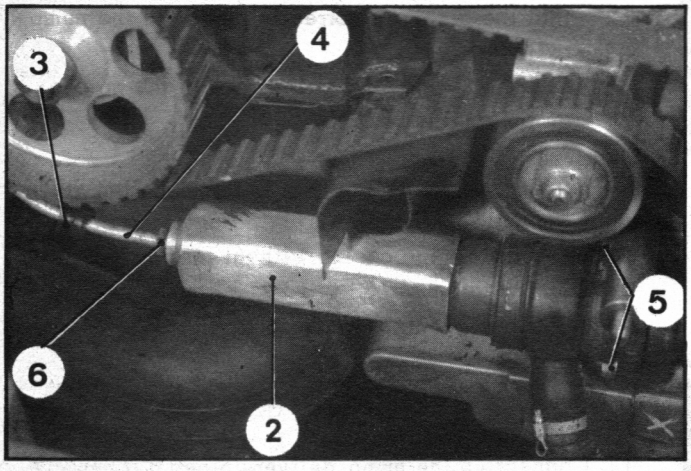

8042

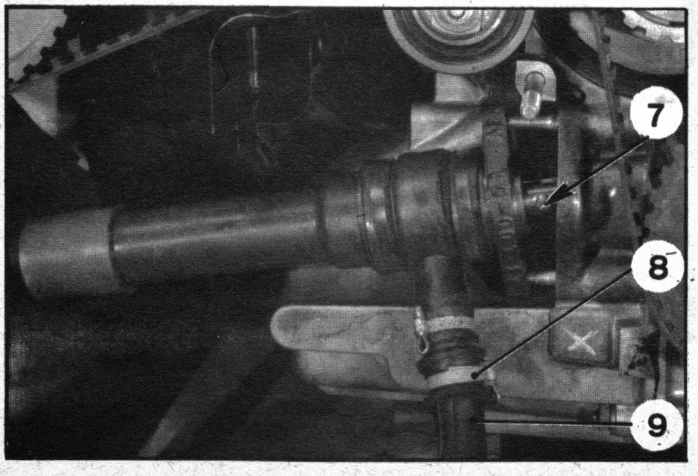

REMOVAL.

1. Remove the engine cooling air intake.

2. Open the pressure regulator bleed screw.

3. Remove the bracket (1) holding the pump delivery pipe.

4. Free the ring (3) and push the protective cover (2) towards the engine (direction of the arrow).

5. Slacken the union screw (6) and release the tube (4) without bending it.

6. Remove the pump :
   Remove the nuts (5).
   Gently pull the pump until the spindle (7) can be removed.

   NOTE : If necessary, turn the engine to bring the driving rod to its top dead centre position.

7. Disconnect the flexible intake pipe :
   - Slacken the collar (8),
   - Free the flexible pipe (9) (tool 3903-T).

8. If necessary, remove the protective cover (2).

Manuel 810-2

8796

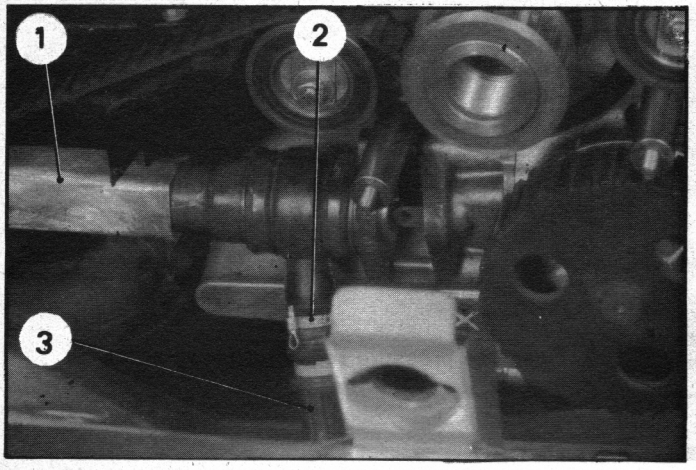

FITTING.

NOTE : During handling, hold the pump piston to prevent it from falling. Check that the bearing faces of pump and casing are clean. Change the O-ring seal between the pump and the engine casing.

9. Connect up the flexible intake pipe :
Fit the flexible pipe (3) to the connection.
Fit and tighten the collar (2).

10. If necessary, position the protective cover (1) on the pump body.

8042

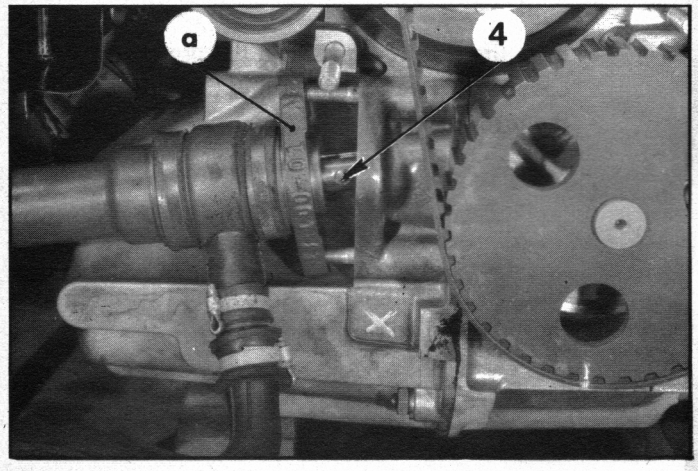

11. Place the pump on the lower mounting stud.
- Connect up the piston drive rod and fit the spindle (4).

NOTE : If necessary, turn the engine to bring the connecting rod to its top dead centre position.

CAUTION : Ensure :
- that the piston is correctly placed in the pump cylinder,
- that the O-ring seal is in place in the groove on the engine casing.

Fit the pump completely over the mounting studs (it should be possible to bring the base plate «a» up to the engine casing without forcing).
Tighten the nuts (5) to 13 to 14 mAN (1.3 to 1.4 m.kg) (contact washer).

8787

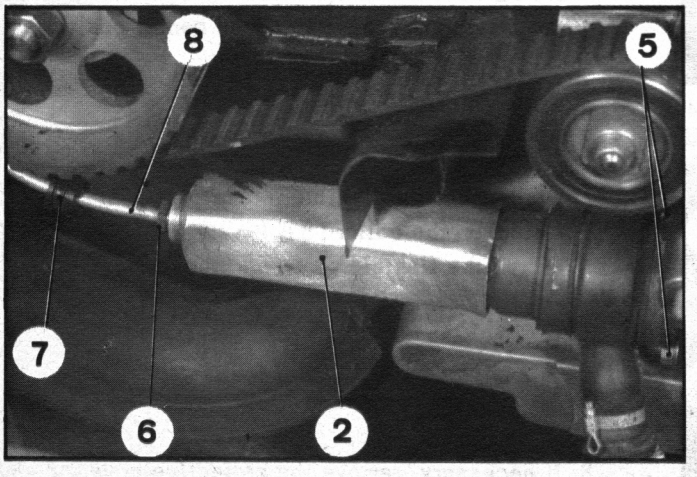

12. Connect up the pump delivery pipe (8) (new seal).
Gently tighten the union screw (6).

13. Fit the ring (7) to the protective cover (1).
- Move the cover (1) on the pipe (8) so that the ring (7) can be fitted.
- Replace the cover (1) on the pump body ; the ring (7) should be in contact with the union screw (6).

8776

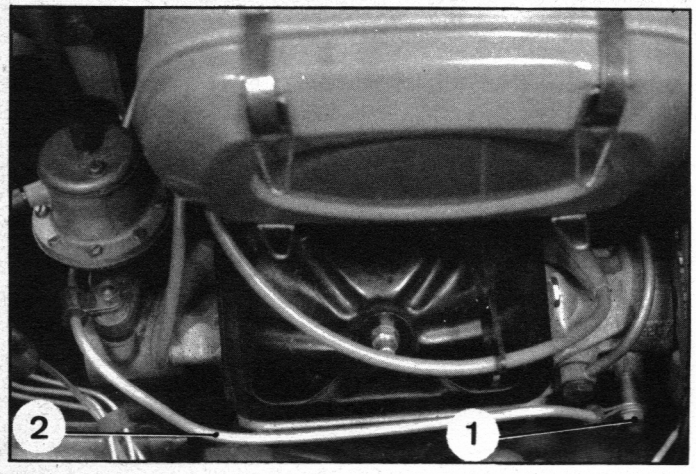

14. Fit the bracket (1) holding the pipe (2) on the cylinder head.

    Tighten the nut (contact washer).

15. Fit the air intake.

16. Prime the high pressure pump :

    - Free the pipe from the hydraulic tank,
    - Fill the high pressure pump with L.H.M liquid through the pipe,
    - *Start the engine with the pressure regulator bleed screw slackened.*
    - Rapidly replace the pipe in the tank.

17. Tighten the pressure regulator release screw.

I REMOVING AND FITTING AN UPPER SUSPENSION ARM.

8441

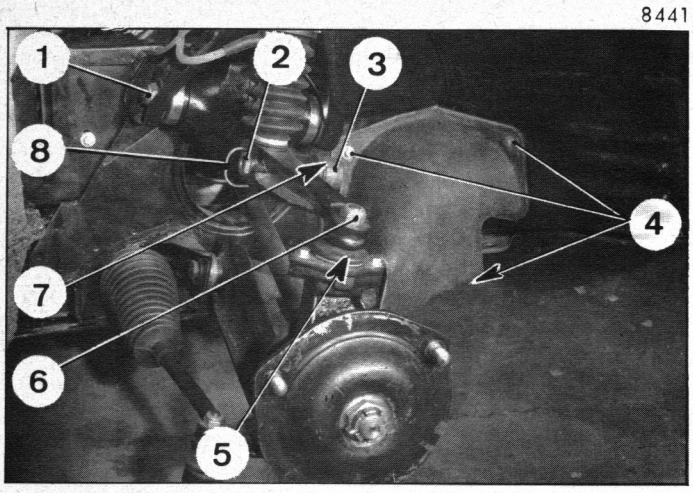

9093

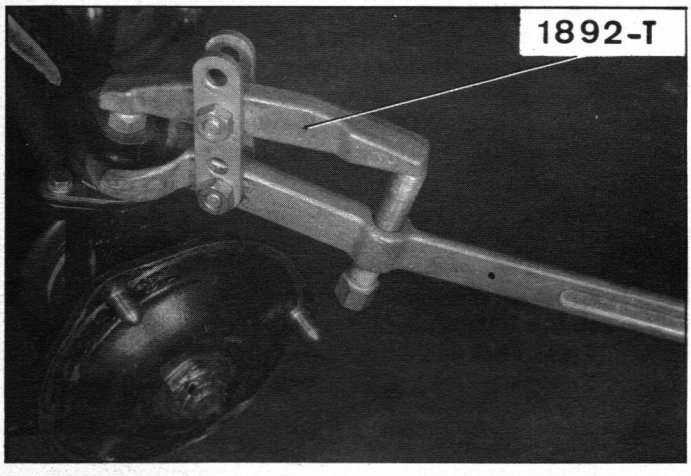

8876

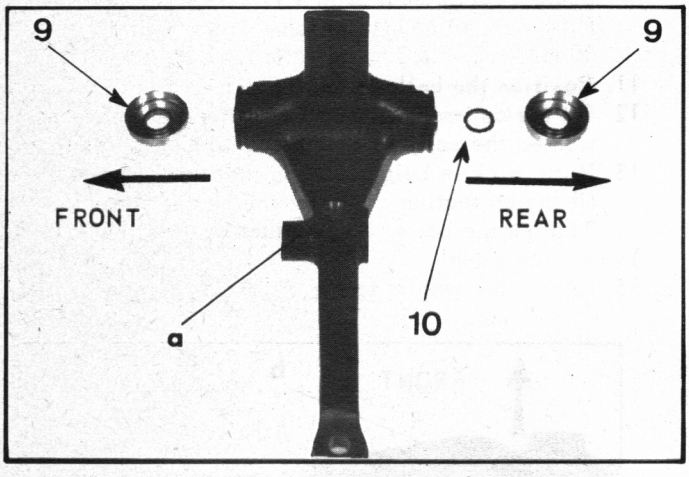

REMOVAL.

1. **Chock up the vehicle :**
   Place the vehicle *in the high position* so that the jack can be pushed underneath.
   Support the front of the vehicle with *the wheels off the ground.*
2. **Release the pressure in the circuits :**
   Slacken the pressure regulator bleed screw.
   Place the height control *in the normal position.*
   Wait until the rear suspension has stabilized and then the lever *to the high position.*
3. Remove the wheel.
   If the work is to be done on the right-hand side, remove the three bolts (4) and the height corrector protection plate.
4. **Disconnect the anti-roll bar :**
   Slacken the castellated nut (2) by a few threads and tap its end sharply to free the ball joint (3).
5. Remove the pin (8).
6. **Disconnect the upper ball joint :**
   Slacken the nut (6) by a few threads.
   Release the ball joint using the extractor 1892-T.
   Remove the nut (6).
7. **Remove the arm :**
   - Remove the nut (1).
   - Drive out the swivel pin.
   - Free the arm.

FITTING.

NOTE : The left-hand and right-hand arms are different. The boss « a » must face forward when the arm is fitted to the vehicle.

8. **Fit the arm :**
   Place the shim washer (10) at the opposite side to the boss « a » (stick it with grease).
   Fit the protective caps (9).
   Offer up the arm and engage the pin.
   Fit a new NYLSTOP nut.
   Tighten to 59 to 65 mN (5.9 to 6.5 m.kg) (torque wrench).
   Check the swivelling of the arm (no play).
9. **Connect up the upper ball joint :**
   Check the rubber seal (5). If it is in poor condition, replace the ball joint assembly.
   Degrease the tail of the ball joint and its housing using a cloth soaked in solvent.
   Fit a new NYLSTOP nut and tighten it to 27 to 30 mN (2.7 to 3 m.kg) (torque wrench).
10. **Couple up the anti-roll bar :**
    Check the rubber seal (7). If it is not in good condition, replace the linkage rod.
    Tighten the castellated nut (1) to 25 to 30 mN (2.5 to 3 m.kg) (torque wrench).
11. Fit the pin (8).
12. *Right-hand side :* Fit the protective cover to the height corrector.
13. **Fit the wheel.**
    Lower the vehicle to the ground.

Manual 810-2

II. REMOVING AND FITTING A LOWER SUSPENSION ARM

8536

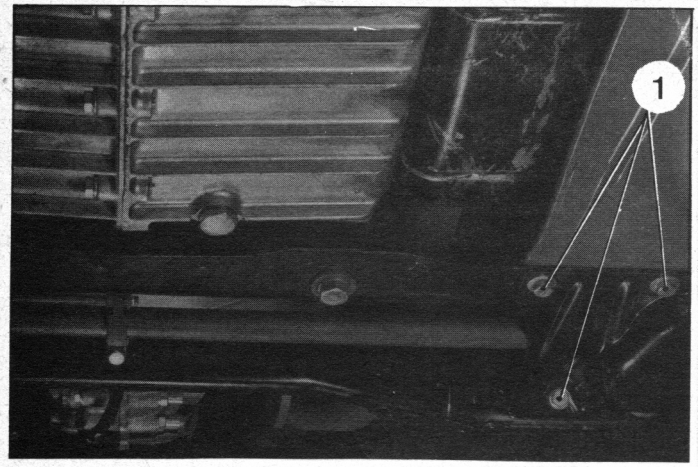

8441

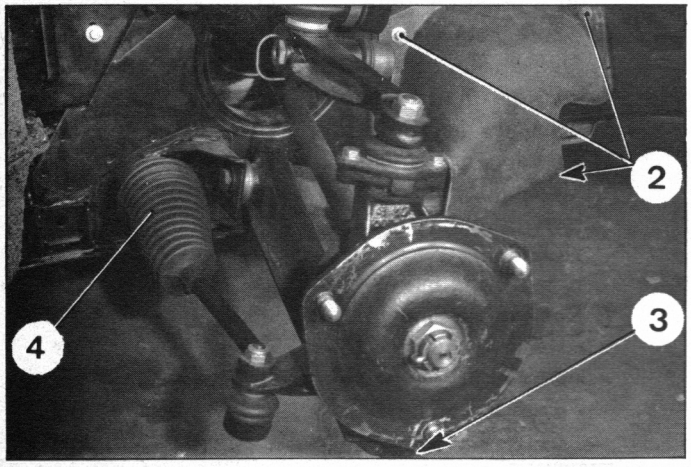

9072

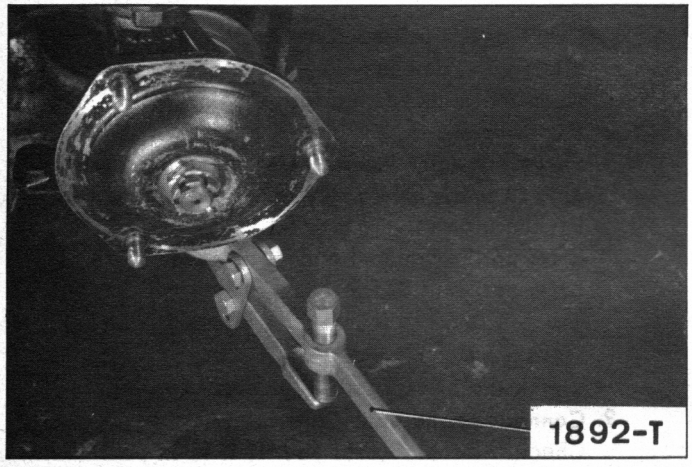

8455

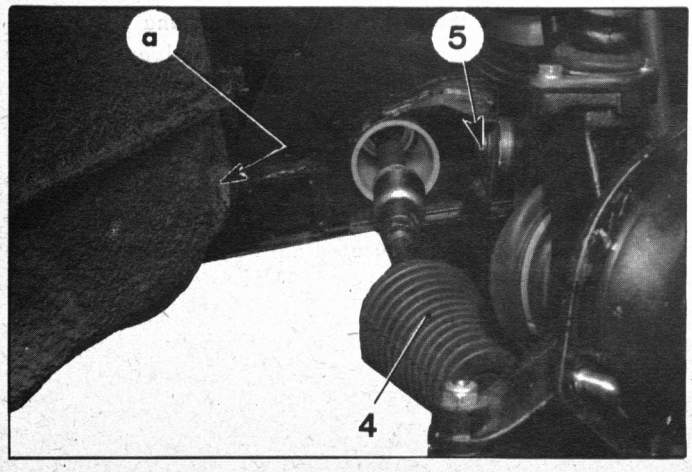

REMOVAL.

1. **Chock up the vehicle :**
   Put the vehicle *in the position* so that the jack can be put underneath.
   Chock up the front of the vehicle *with the wheels off the ground.*
2. **Release the pressure in the circuits :**
   Slacken the pressure regulator bleed screw.
   Place the height control *in the normal position.*
   Wait until the rear suspension has stabilized and then put the control lever *to high position.*
3. Remove the wheel.
4. Remove the three bolts (1) and the steel plate protecting the anti-roll bar bearing.
5. If the work is to be done on the right-hand side ; remove the bolts (2) and the height corrector protection plate.
6. **Disconnect the lower ball joint :**
   Slacken the nut (3) by a few threads.
   Unstick the ball joint using the extractor 1892-T.
   Remove the nut (3).
7. Slide away the bellows (4).
8. **Remove the suspension arm :**
   Remove the nut and then free the pin (5). If necessary, slightly bend the wheel arch at « a ».
   Remove the arm horizontally and then upwards.

FITTING.

NOTE : The left-hand and right-hand suspension arms are different. The edge « b » must face forward when the suspension arm is on the vehicle.

9. **Fit the suspension arm :**
   Offer up the suspension arm.
   Fit the pin and a *new NYLSTOP nut.*
   Tighten it to 80 to 88 mΛN (8 to 9 m.kg) (torque wrench).
10. **Connect up the lower ball joint :**
    Check the rubber seal. If it is in poor condition replace the ball joint assembly.
    Degrease the tail of the ball joint and its housing using a cloth soaked in solvent.
    Fit a *new NYLSTOP nut* and tighten it to 27 to 30 mΛN (2.7 to 3 m.kg) (torque wrench).
11. **Position the bellows (4) (elastic collar).**
12. Fit the anti-roll bar bearing protection plate and tighten the bolts (1) (contact washer).
13. If the work is being done on the right-hand side : fit the protective cover for the height corrector. Tighten the bolts (2) (contact washer).
14. Fit the wheel.
15. Lower the vehicle to the ground.

8883

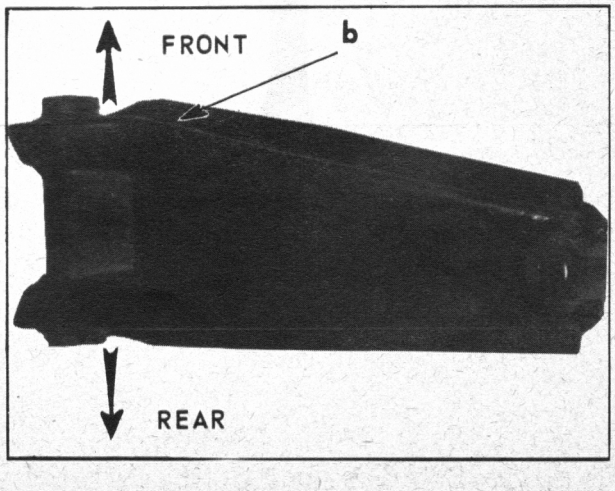

III. REPLACING THE « FLUIDBLOC » BUSHES OF A LOWER SUSPENSION ARM.

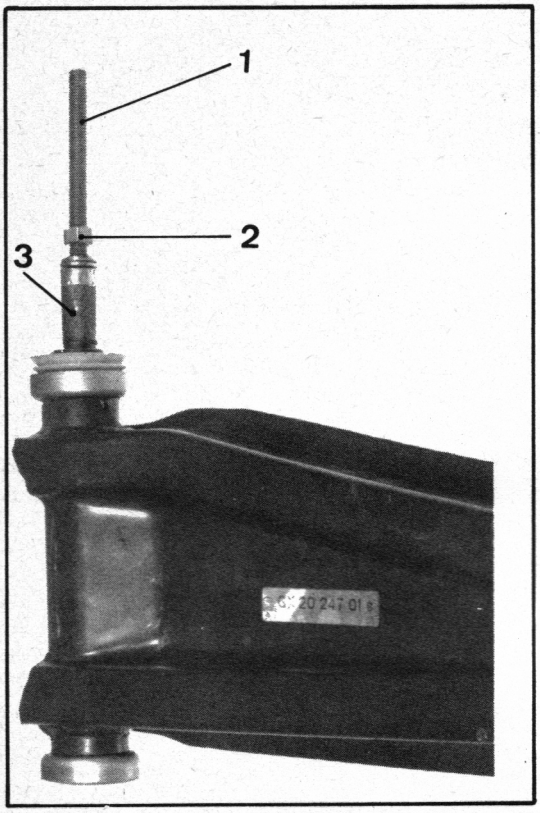

1. Remove the suspension arm.

2. Remove the « fluidbloc » bushes :

a) Clamp the arm in a vice (jaws).
NOTE : Use a 8 mm expanding pin (« Rawl » pin or similar type) to enable the bushes to be removed more easily.
Fit the pin with a threaded rod (1) and a nut (2).

b) Insert the pin into the bush.
Tighten the nut in order to open the two legs of the pin until the bush can be moved.

c) Pull on the rod while rotating the bush until the latter is completely withdrawn.

d) Disengage the pin (3) from the « fluidbloc » bush.

e) Proceed in the same way for removing the second bush.

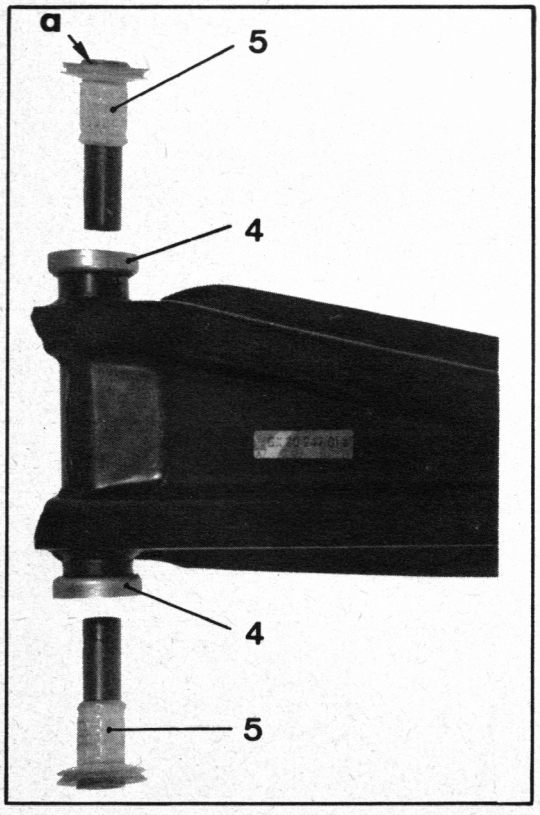

3. Clean the arm.

4. Grease the metal cups (4) and the thrust face of each « fluidbloc » bush (use TOTAL MULTIS grease).

5. Fit the new « fluidbloc » bushes.
Complete the fitting by tapping on side « a » of each bush, using a mallet.

I. REMOVING AND FITTING A COMPLETE SWIVEL OR BALL JOINT (UPPER OR LOWER)

8443

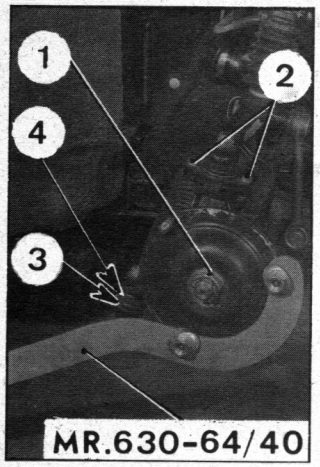

8591

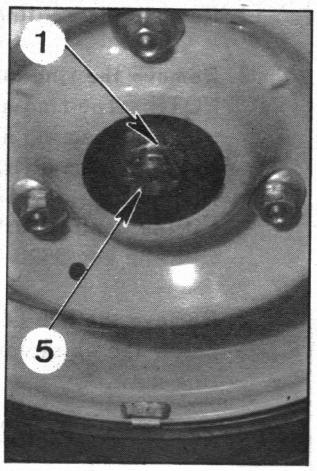

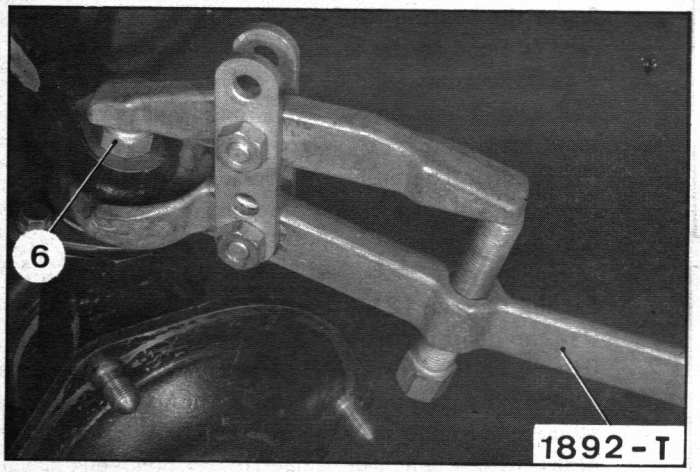

8444

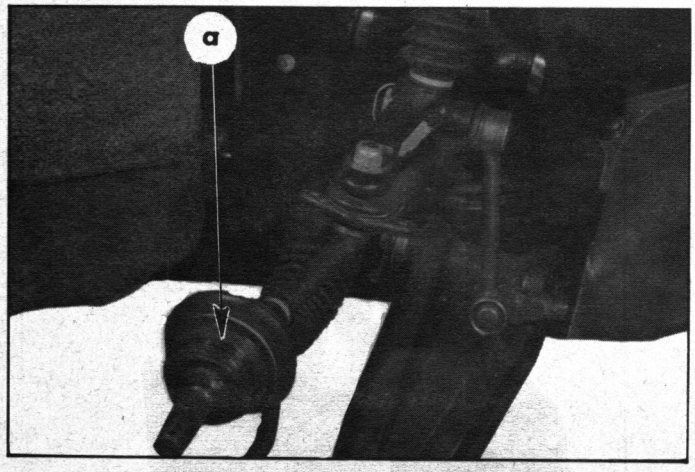

REMOVAL.

1. Put the vehicle *in the high position* so that the jack can be put underneath.
2. Remove :
   - the embellisher,
   - the pin (5),
   - the nut (1).
3. Chock up the front of the vehicle *with the wheels off the ground.*
4. Remove the wheel.
   NOTE : When the wheel has been removed, the nut (1) can be slackened using the tool MR. 630-64/40.
5. **Disconnect the steering ball joint (3) from the swivel :**
   Slacken the nut and use the extractor 1892-T.
6. **Remove the upper and lower ball joints (if necessary) :**
   Use the extractor 1892-T.
   Bear on the nut (6) previously slackened by a few threads.
7. **Remove the swivel :**
   Remove the bolts (2) holding the lower and upper ball joints.
   Push back the end of the drive shaft and free the swivel.
   CAUTION : *Do not pull on the drive shaft otherwise the ball joints will come out of the « tripod» transmission.*

FITTING.

8. **Fit the lower and upper ball joints :**
   Degrease the tails of the ball joints and their housings (using a cloth soaked in solvent).
   Replace the NYLSTOP nuts. Tighten them to 27 to 30 mΛN (2.7 to 3 m.kg) (torque wrench).
9. **Fit the swivel :**
   Offer up the swivel and fix the lower ball joint.
   Tighten the bolts (contact washer) to 18.5 mΛN (1.8 m.kg) (torque wrench).
10. **Fit the drive shaft :**
    Grease the surface « a » of the seal
    Fit the nut (1).
11. **Fit the upper ball joint :**
    Tighten the bolts (contact washer) to 18.5 mΛN (1.8 m.kg) (torque wrench).
12. **Connect up the steering ball joint (3) to the swivel :**
    Check the rubber seal (4). If it is in poor condition replace the track rod assembly.
    Degrease the tail of the ball joint and its housing (cloth soaked in solvent).
    Replace the NYLSTOP nut and tighten it to 18 to 20 mΛN (1.8 to 2 m.kg) (torque wrench).
13. Tighten the nut (1) (faces and threads greased) to 350 to 400 mΛN (35 to 40 m.kg) (torque wrench).
    Use the tool MR.630-64/40. Pin the nut.
    NOTE : The nut (1) may be tightened with the wheel fitted and the vehicle on the ground.
14. Fit the wheel and lower the vehicle to the ground.

II. REMOVING AND BEARING, SEALS OR HUB.

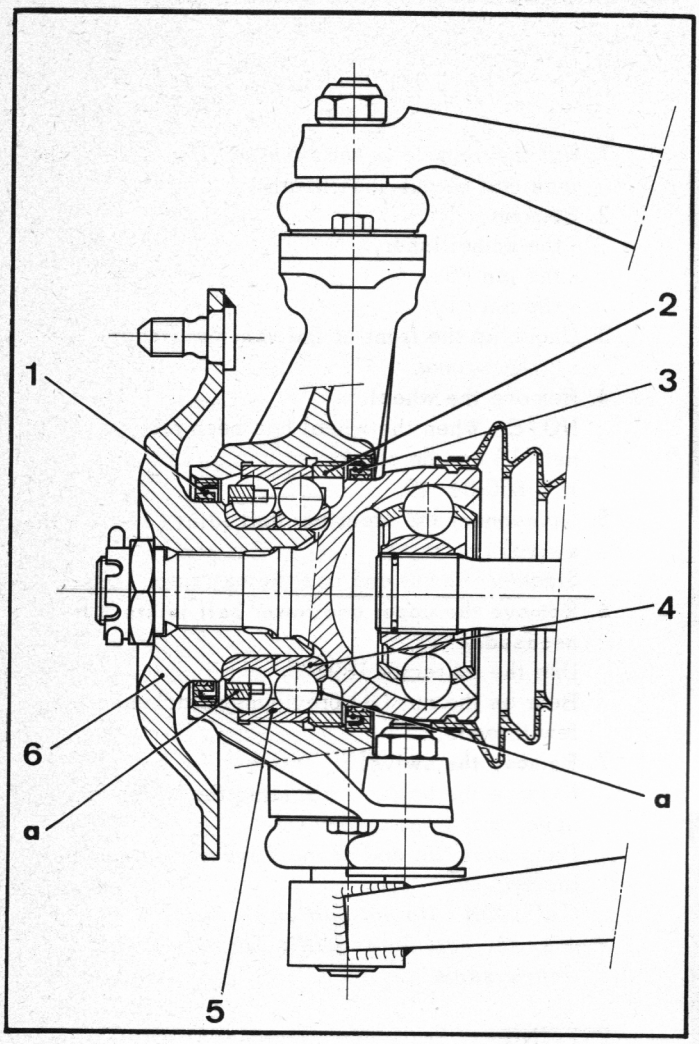

G. 41.1

REMOVAL.

1. **Remove the swivel.**

2. **Remove the sealing ring (3).**

3. **Remove the ring-nut (2) :**
NOTE : The ring-nut should only be removed when the bearing has to be replaced.
Using a 4 mm drill, clear the peening locking the ring-nut.
Fit the central part of the assembly 3321-T fitted with the key 3320-T. Position the bolt A.

4. **Remove the hub (6) :**
Screw the extractor 1893-T in the place of the ring-nut.

5. **Remove the sealing ring (1).**

6. **Remove the hub bearing.**

FITTING.

7. **Fit the hub bearing :**
Smear the bearing with grease. Take out the inner race (4) and fit the bearing into the swivel, using a press and the mandrel MR. 630-31/96. The mandrel should bear on the outer race (5). Fit the inner race (4).
CAUTION : The projecting part « a » of the ball races should face the outside of the bearing (see drawing).

8. **Fit the ring-nut (2) :**
Use the central part of the assembly 3321-T, fitted with the key 3320-T. Position the bolt A. Tighten the ring-nut to 400 tp 500 mΛN (40 to 50 m.kg) (torque wrench) and lock it by two blows with a punch at diametrically opposed points.

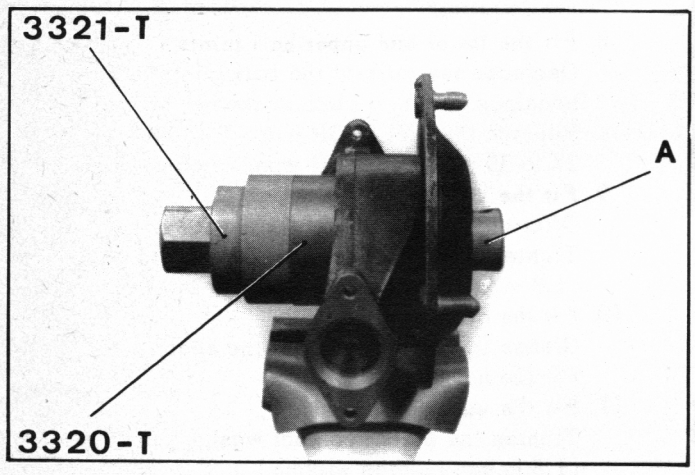

8897

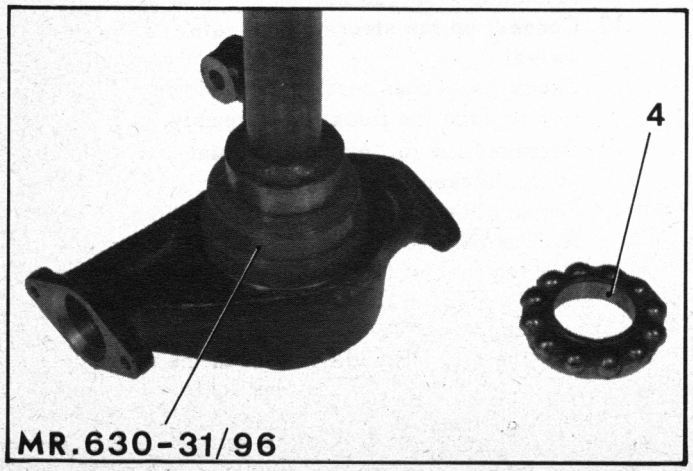

9002

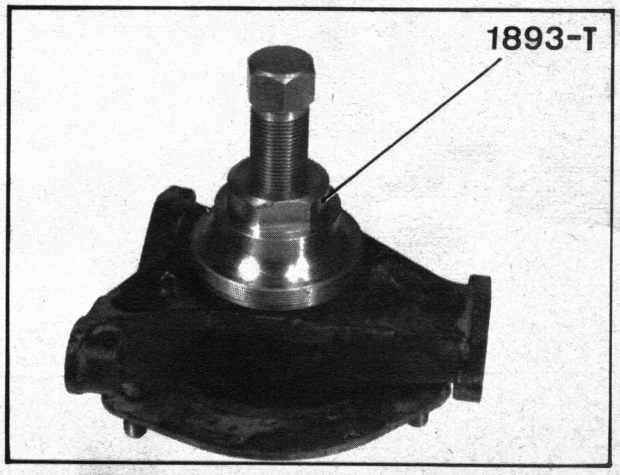

9847

G. 41-1

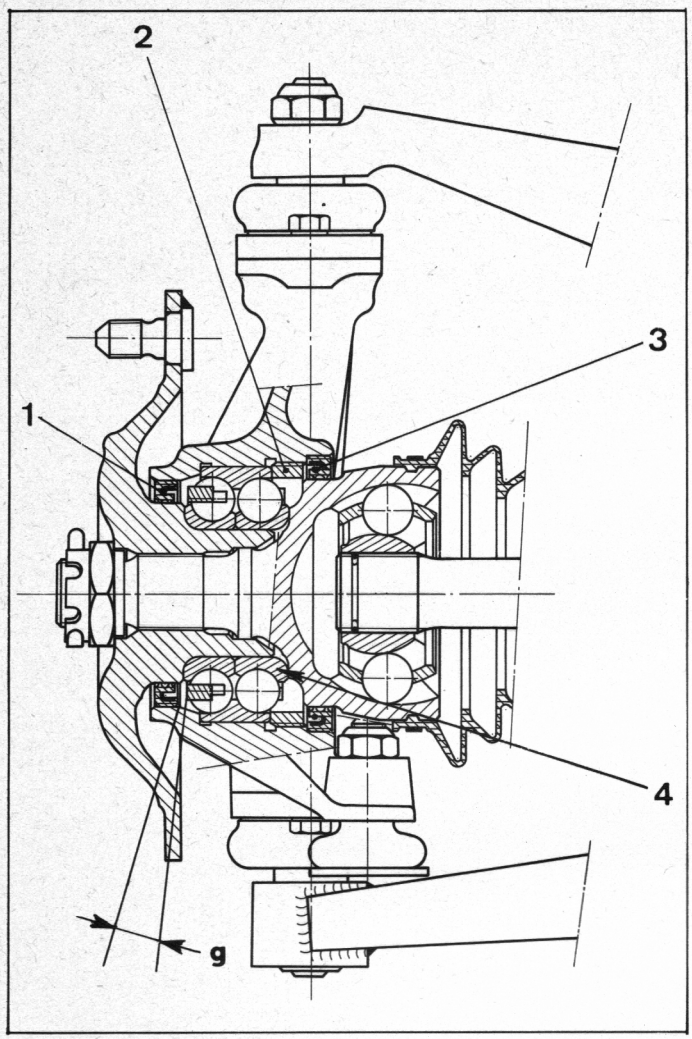

9. Fit the sealing ring (1) :

Use the mandrel MR. 630-31/97 to give the clearance « g » between the ring and the ball race.

10. Fit the hub :

Grease the inner lip of the ring (1) and where it touches the hub (at « a »).

Fit the hub using a press bearing on the *inner ball race (4) of the bearing.*

11. Fit the sealing ring (3) :

Push this ring right home into its housing.

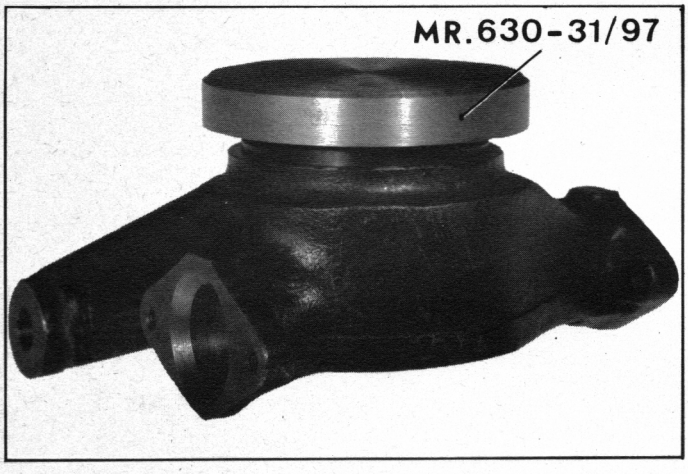

12. Fit the swivel to the vehicle.

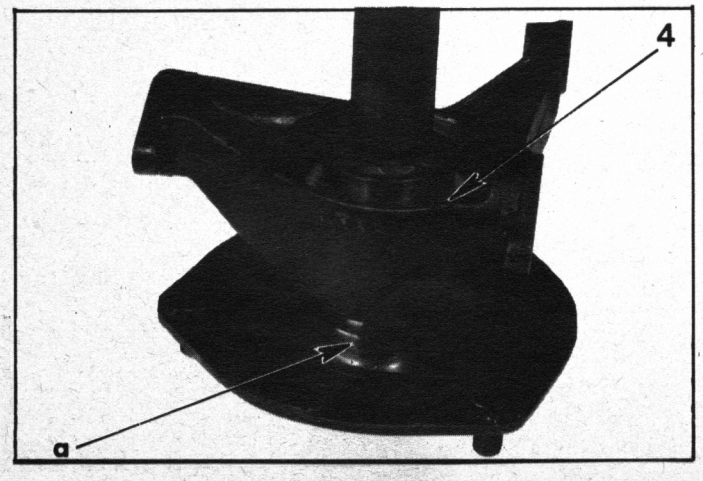

REMOVING AND FITTING A FRONT AXLE UNIT

(For exchange)

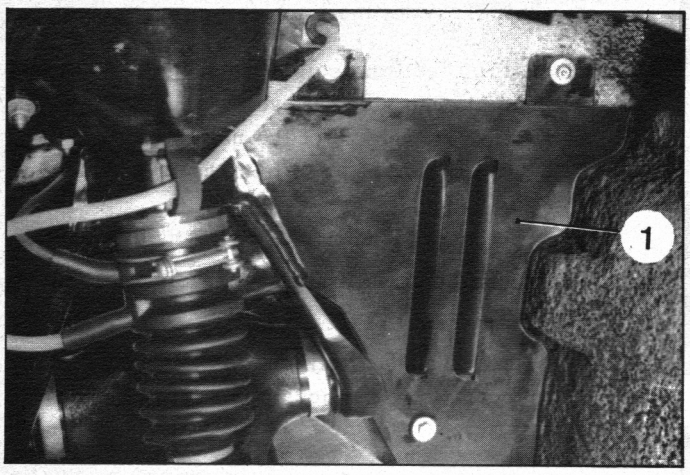

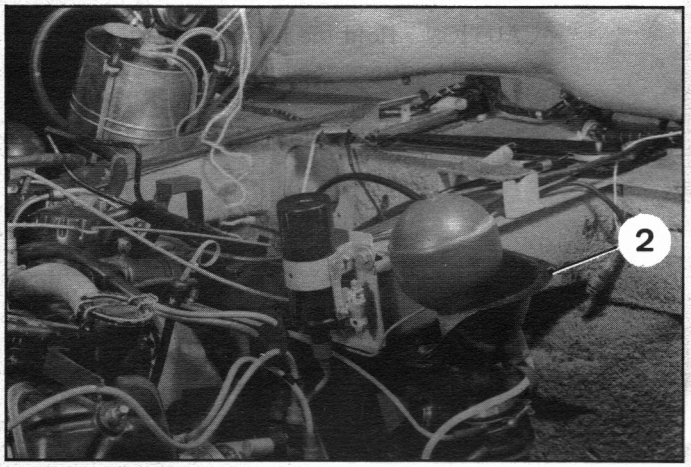

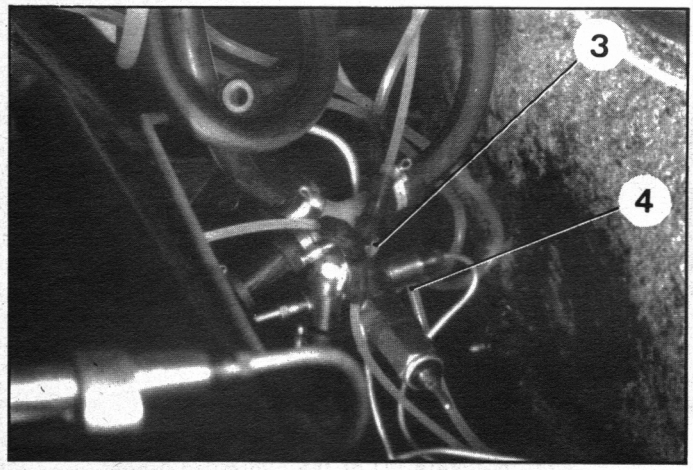

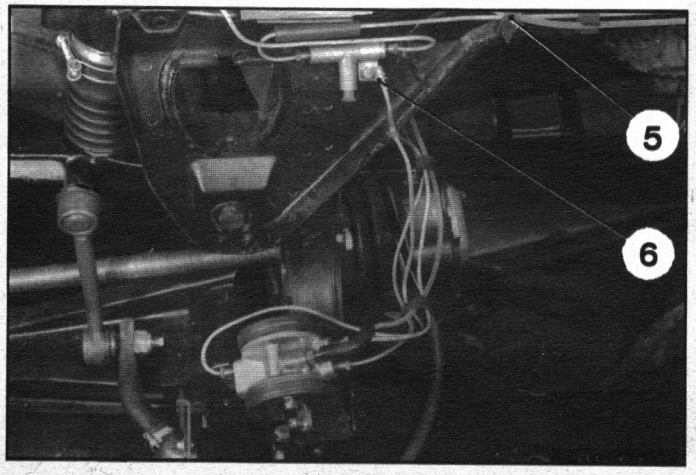

Manual 810-2

REMOVAL

1. Choke up the vehicle at the front with the wheels off the ground.

2. Slacken the release screw on the pressure regulator.
   Place the manual height control to *normal position.*

3. Remove the bolt holding the bonnet strut on the wheel arch.
   Raise the bonnet fully without touching the scuttle upper panel and secure it in this position, using a cord (protect the upper panel).

4. Remove :
   - the spare wheel,
   - the battery.

5. Disconnect the electrical harnesses supplying the headlights, the indicator lights, the horn, the alternator, the distributor and the lead for the oil pressure switch.

6. Remove the suspension spheres.
   Blank off each suspension cylinder with a plug.

7. Remove the front panel assembly and the lower front finishing panel.

8. **Remove the engine-gearbox assembly.**

9. Remove the bolt holding the jointed shaft to the pinion of the steering box.

10. *On each side, remove :*
    - the plates (1) between chassis and axle unit,
    - the plates (2) protecting the suspension spheres.

11. Remove the bolts (3) and (4) holding the four-way union and the union for the overflow return tubes.
    Uncouple the supply union (6) from the height corrector .
    Disconnect the overflow return tubes from the front suspension cylinders and clear them from the collars (5).

12. Remove :
    - the bolts holding the right-hand anti-roll bar bearing,
    - the linkage rod from the manual height control.

13. Remove the drive shafts.

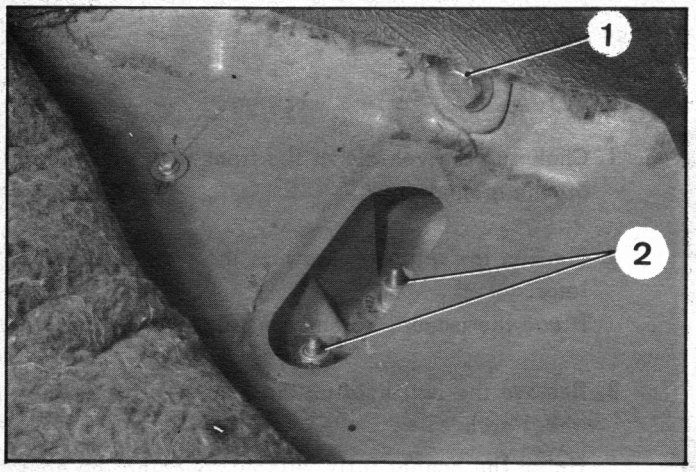

9410

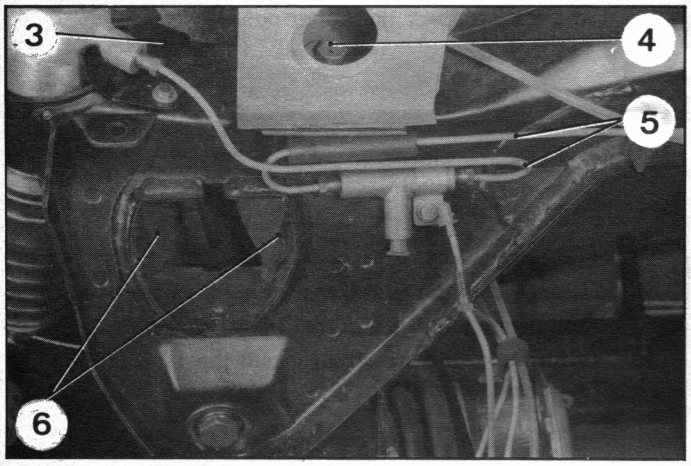

9409

14. Remove the axle unit :

a) Place a jack, fitted with trestle support 2510-T, under the front unit.

b) Lift up the front carpet under the pedals, and at each side remove the rear fixing bolts (1) and (2) of the unit.
Remove the bolts (4) from the two front extensions.
Free the hydraulic pipes from their brackets.

c) Detach the unit from the chassis.

IMPORTANT : Mark the position of the shims placed between chassis and lower mounting at (1).

CAUTION : Hold the height corrector (8) so that it is not damaged when the suspension unit is removed.
Fix it to the extension after the unit has been taken away.

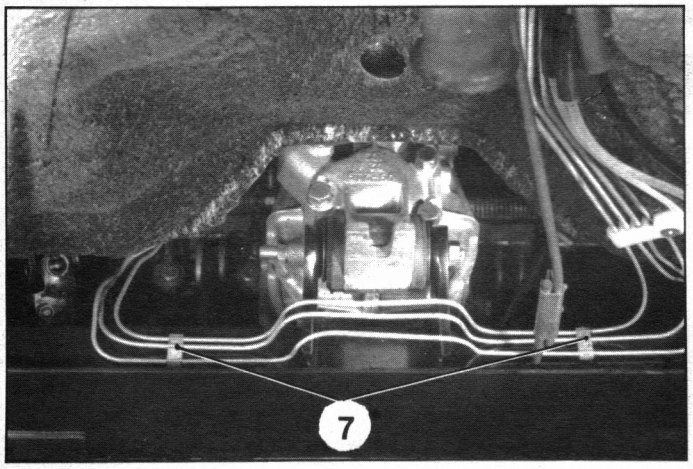

9022

15. Strip down the axle unit :

Remove :

- the anti-roll bar,
- the automatic height control rod,
- the suspension arm and swivel assemblies,
- the track rods,
- the steering system,
- the brackets (3),
- the suspension cylinders,
- the travel stops (6),
- the pipes (5) and the three-way union,
- the brackets (7) of the hydraulic pipes,
- the spare wheel support

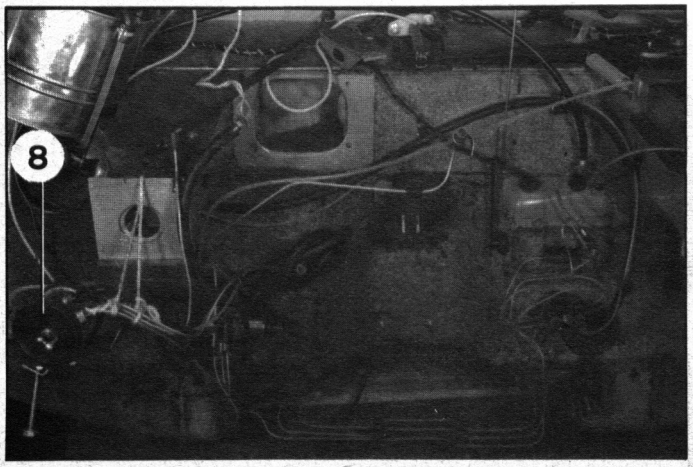

9415

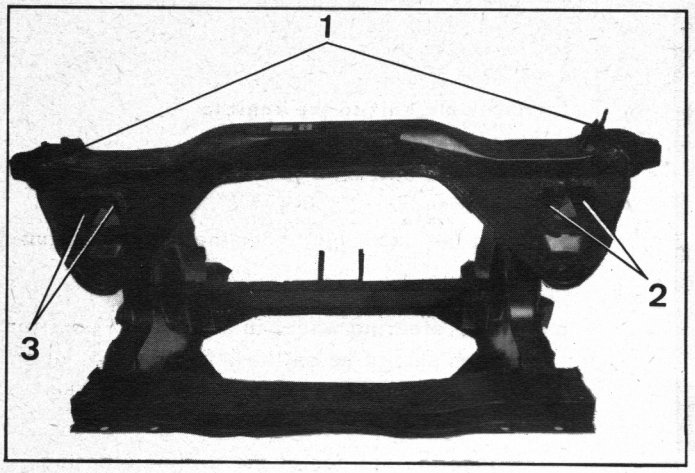

9472

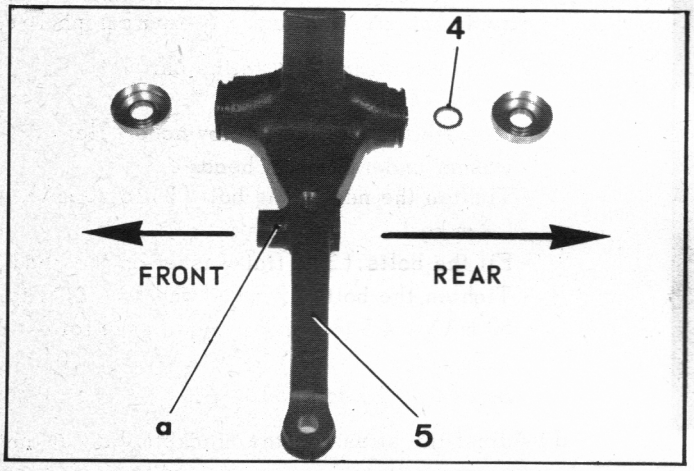

8876

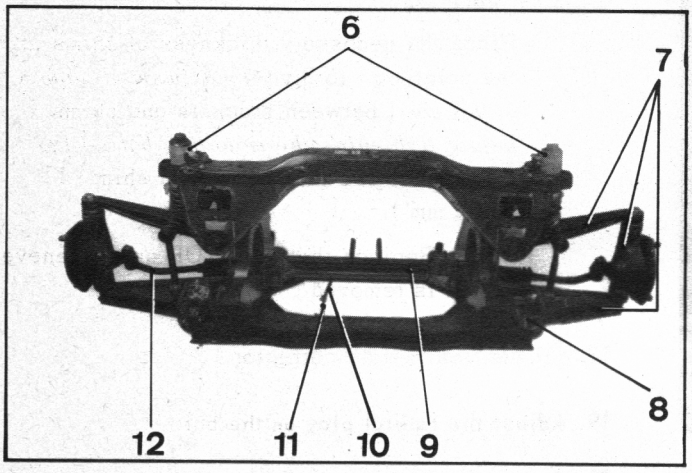

9468

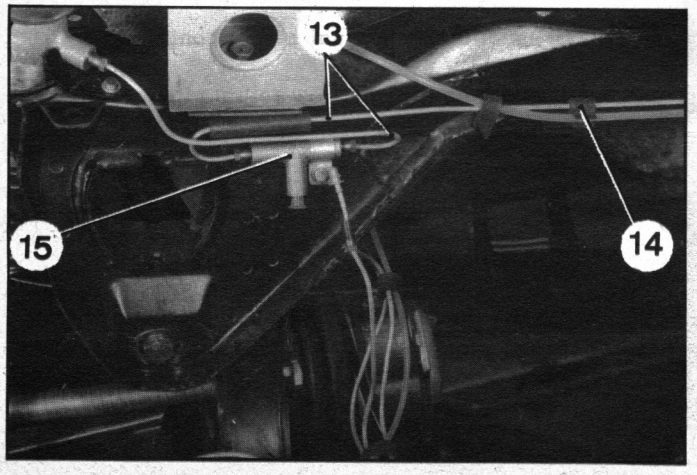

9409

Manual 810-2

PREPARATION

16. Assembling the axle unit :

a) Fit the travel stops (2) and (3) (using soapy water only).

b) Fit the suspension arm and swivel assemblies (7) and fit the pins :

- The threads on the pin holding the upper suspension arm (5) *must be directed towards the body* while that on the lower arm *must be directed towards the front of the vehicle.*
- The shim (4) should be placed on the opposite side to the boss « a ».
- Fit a new NYLSTOP nut on each pin.
- Tighten the nut on the upper suspension arm to 59 to 65 mΛN (5.9 to 6.5 m.kg). The nut on the lower arm should be tightened to 80 to 88 mΛN (8 to 8.8 m.kg) (torque wrench).
- Oscillate the suspension arms and check that there is no play where they are connected to the unit.

c) Fit the automatic height control rod (11). *Do not tighten the mounting flange on the anti-roll bar.*

d) Fit :

- the anti-roll bar (8),
- the steering system (9),
- the track rods (12),
- the suspension cylinders (6),
- the brackets (1) orientating the cylinders (contact washer),
- the lugs (14) holding the supply pipe to the left-hand cylinder,
- the three-way union (15),
- the feed pipes (13) to the suspension cylinders,
- the linkage (10) to the manual height control,

e) Adjust the position of the steering rack so as to give *equal clearance at each side of the housing.*

f) Fit the hydraulic pipe supports.

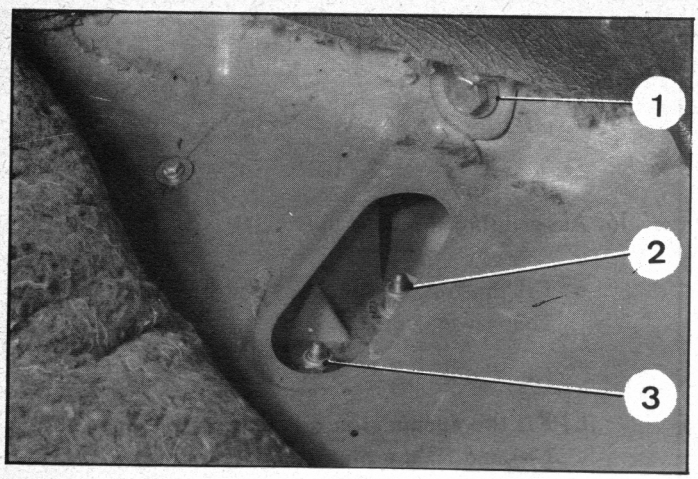

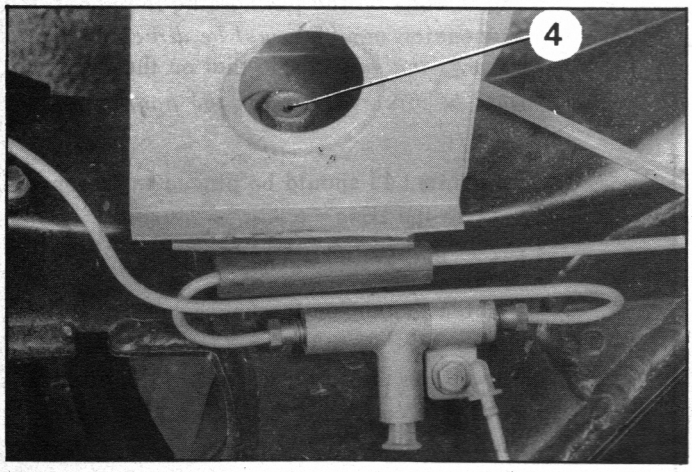

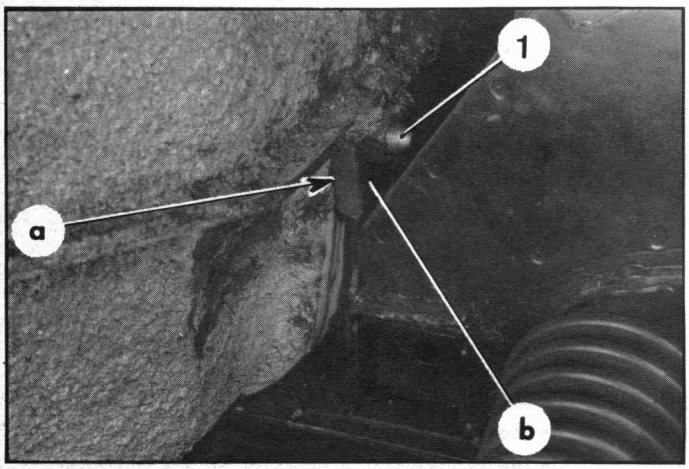

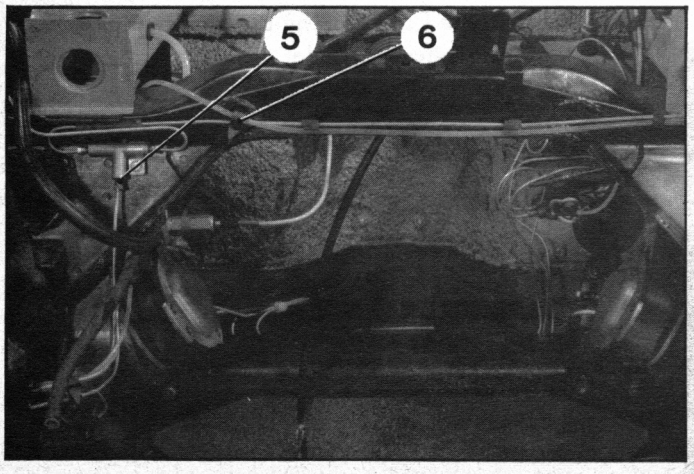

FITTING

17. Fit the axle unit to the vehicle :

a) Place the unit on a jack fitted with the trestle support 2510-T.
Bring the assembly under the chassis mounting points.

b) Set the steering wheel in the correct position : the arm should be on the left-hand side at an angle of 30° below the horizontal (in the « twenty to » position).
Engage the splines of the jointed steering column in the steering rack pinion without moving the steering rack (see paragraph 16 e).

c) Fit the mounting bolts to the unit.
At each side :
- Fit the bolts (2) and (4) by hand (flat washer under the bolt heads),
- Tighten the nut on the bolt (2) to 20 mΛN (2 m.kg).
- Fit the bolts (3) (flat washer on the head).
- Tighten the bolts (2), (3) and (4) to 45 to 50 mΛN (4.5 to 5 m.kg) and in the following order :
bolt (4), (2) and (3).

d) Adjust the stress on the brackets « b » at the lower unit mounting :
At each side :
- Place the necessary thickness of shims at the point « a » to give *a maximum clearance of 0.5 mm* (between brackets and shims) *before tightening the mounting bolts (1).*
(There are two thicknesses of shim : 1 and 2 mm).

NOTE : Replace the NYLSTOP nuts whenever the unit is removed.

18. Fit the front height corrector.

19. Adjust the lateral play on the bar.

20. Pre-set the front heights.

21. Connect up the manual height control.

22. Connect up the overflow return pipes of the suspension cylinders.

23. Link up the union (5) (new seal).

Tighten to 8 to 9 mΛN 0.8 to 0.9 m.kg).

Fit the rubber collars (6) holding the overflow return pipe and the vent pipe of the left-hand suspension cylinder.

9022

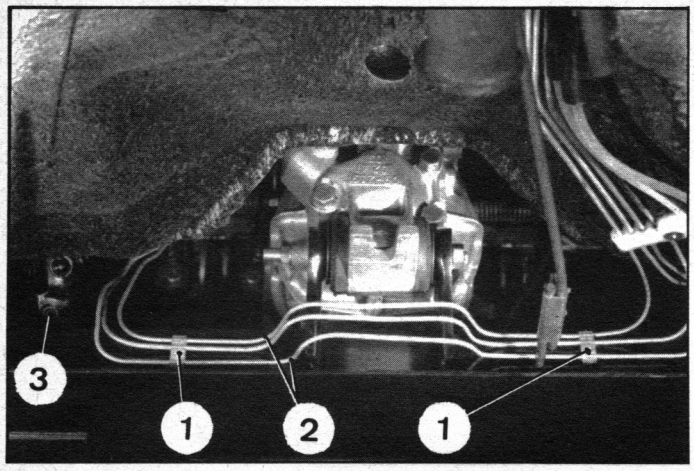

9408

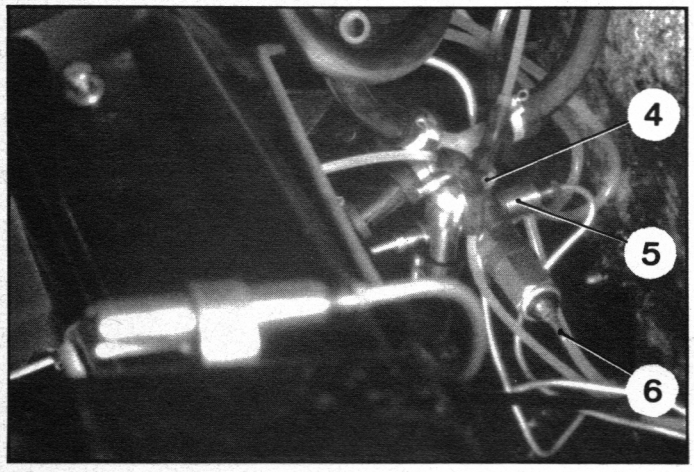

Manual 810-2

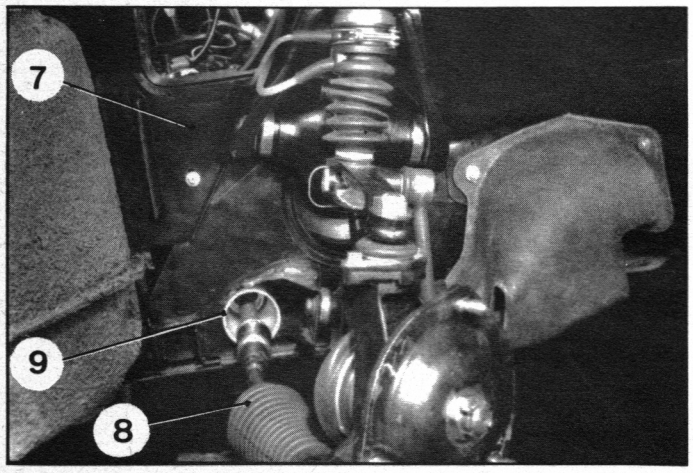

8455

24. Fit the bolt (3) (*new NYLSTOP nut each time*) and adjust the clearance between the steering column support tube and the stop ring for the steering column (1 to 1.5 mm).
Tighten the nut to 13 to 14 mΛN (1.3 to 1.4 m.kg)

25. Fit the four-way union (5) and the union for the pipes (4) (contact washer).

26. Fix the pipes (2) with the brackets (1).

27. *On each side, fit :*

- the plate protecting the suspension spheres,
- the plate (7) between chassis and unit.

28. Fit the spare wheel support block.

29. Connect the lead to the pressure contact (6).

30. **Fit the engine-gearbox assembly :**

31. Fit :
- the suspension spheres,
- the fan panel and lower finishing panel assembly.

32. **Bleed the front brakes.**

33. Fit the wheels and lower the vehicle to the ground.

34. **Check the toe-in of the front wheels :**

Fit the bellows (8) on the plastic sheaths of the steering housing.

REMOVING AND FITTING A REAR SUSPENSION ARM.

REMOVAL.

1. With the suspension *in the high position,* place a jack under the rear of the vehicle.

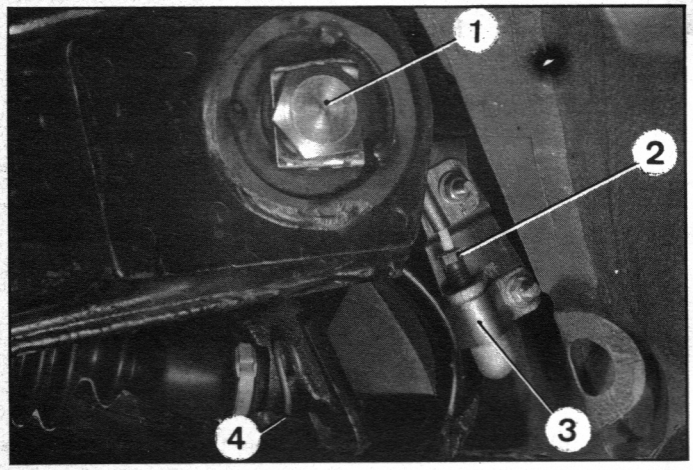

8735

2. **Lower the pressure in the circuits :**
   a) Slacken the bleed screw on the pressure regulator and put the height *into the normal position.*
   b) Wait until the rear suspension has stabilized and then put the control *into the high position* so that the vehicle settles completely.

3. Raise and chock the rear of the vehicle with the wheels off the ground.
   Remove the rear wheels.

4. **Remove the suspension arm :**
   a) Remove the pin (4) and push back the piston rod of the suspension cylinder.
   NOTE : If there is still pressure in the suspension circuit, operate the manual control several times until the piston rod is free.
   b) Slacken the collar (3) and uncouple the union (2).
   Bend back the tab and remove the bolt (1).
   If appropriate, remove the shims from behind the lock-plate.
   c) Screw the assembly 2068-T in place of the bolt (1). Fit the extractor. Turn the bolt A to release the arm of the anti-roll bar.
   d) Remove the extractor and the arm.

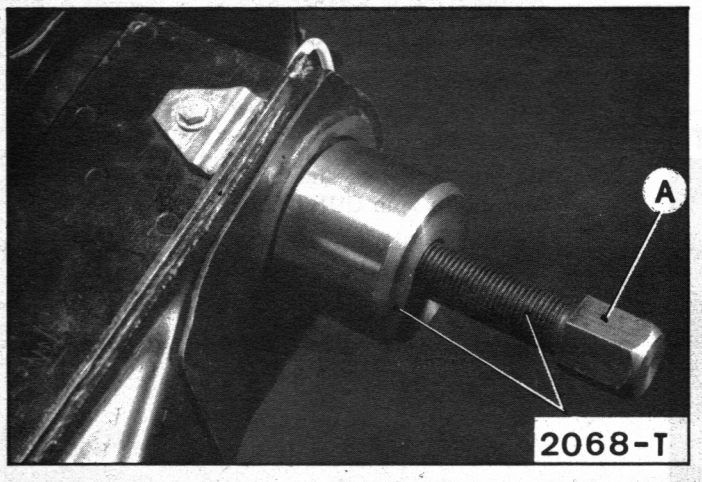

9183

FITTING.

5. IMPORTANT NOTE :
   The two arms are fixed on the ends of the anti-roll bar : the distance between them on this bar determines their lateral play.
   This play is adjusted by means of shims placed behind the bolt lock-plate (1), *on one only of the two arms. The play must be reset whichever arm is removed* (with or without shims).

Manual 810-2

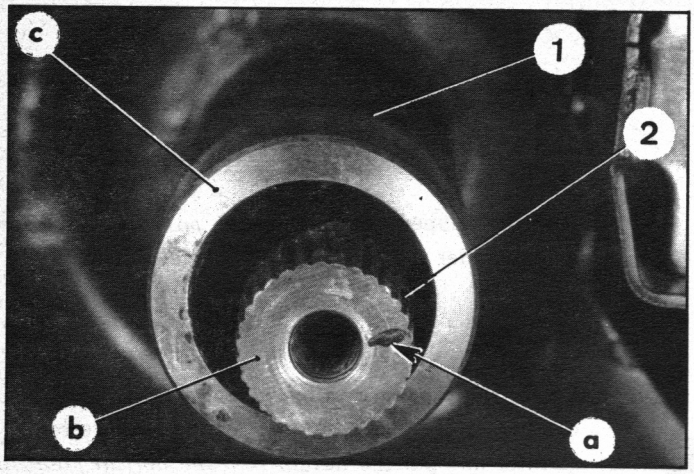

9266

6. If the bearing face « c » of the support (1) shows traces of binding, skim it slightly using a stone.

a) Carefully clean :
- the support tube (1),
- the bearing surfaces « b » of the anti-roll bar and « d » of the arm.

b) Grease (bearing grease) :
- the face « c » and the surfaces of the bearings on the support tube,
- the bearings of the arm hub.

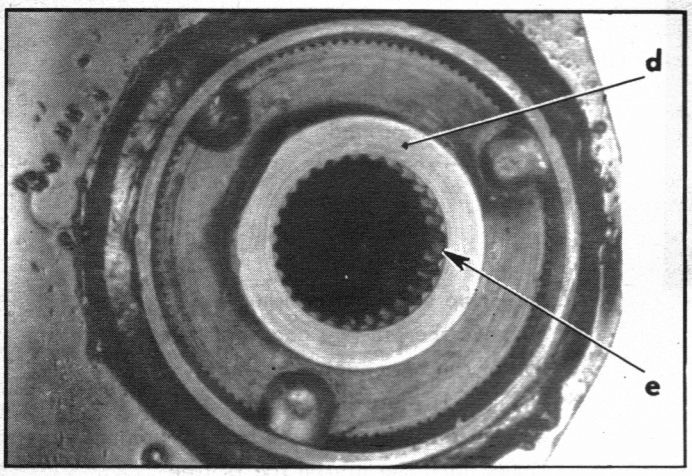

9265

7. Case 1 : Fit the arm with no shims :

a) Engage the hub of the arm on the support-tube (1) and connect it to the anti-roll bar (2).
CAUTION : *The mark « a » on the bar (mark made by an electric scriber) must correspond with the mark « e » on the hub (one spline missing).*
NOTE : If the mark « a » is not visible, it is necessary to position the arms in relation to one another : *once fitted they must be in the same plane (without twisting the bar).*

b) Remove the stop bolt from the other arm on the anti-roll bar.

c) Position the tool 2069-T on the arm to be removed : tighten the bolt A in the anti-roll bar. *Fully tighten the nut B until the arm is in place.* (the face « c » of the support tube is then bearing on the friction washer placed in the arm hub). Remove the tool 2069-T.

d) Fit the stop bolt on the bar, together with its lock-plate.
NOTE : Smear the threads of the bolt and the lock-plate with CURTYLON.
Tighten the bolt to 18 to 20 mAN (1.8 to 2 m.kg).
Bend over the tab.

e) *Set the lateral play of the arms, at the opposite side (see paragraph 8).*

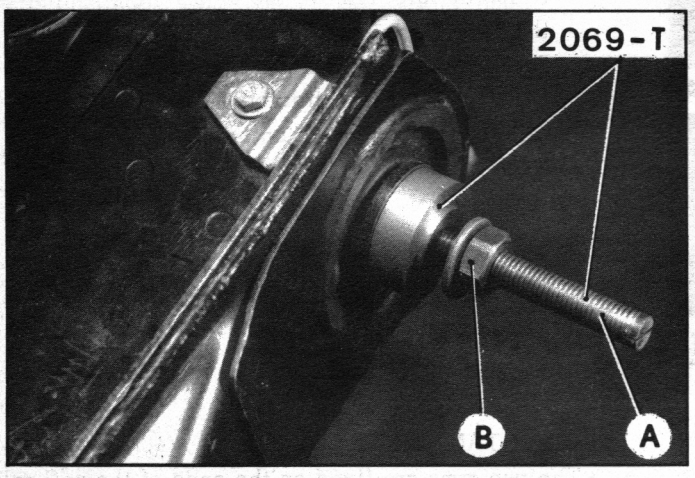

9184

8. Case 2 : Fitting the arm with shims :

a) Engage the hub of the arm on the support tube (1) and connect it to the anti-roll bar as indicated in paragraph 7 a above.

b) Adjust the lateral clearance of the arms as described in the following paragraph.

9184

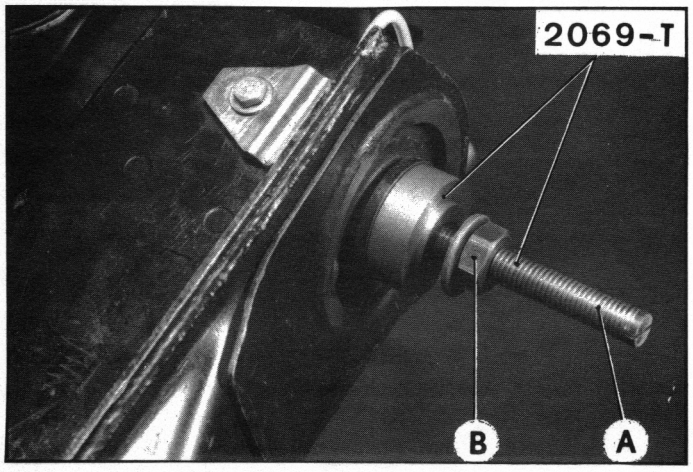

9262

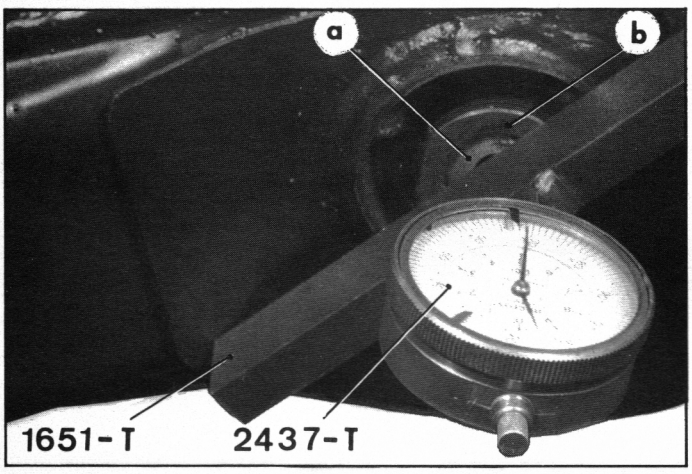

Manual 810-2

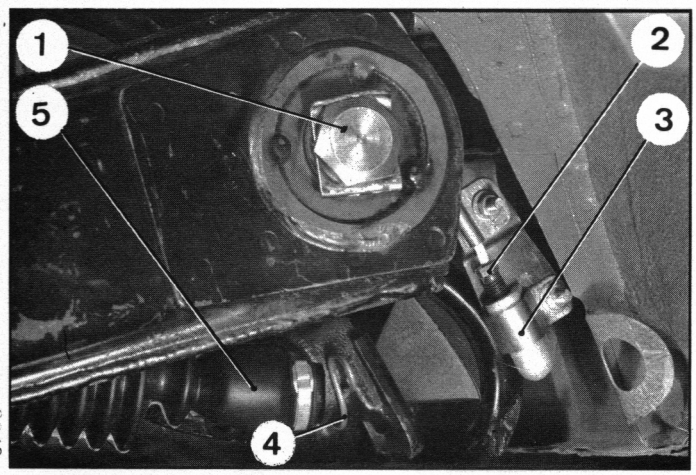

8735

9. **Adjust the lateral play of the arms :**
(see note in paragraph 5)

a) Position the tool 2069-T : tighten the central bolt A in the anti-roll bar.
Tighten the nut B while moving the arm :
CAUTION : *Stop tightening when the arm falls slowly under the action of its own weight.*
(the end of the support tube is then bearing on the friction washer in the hub of the arm, causing slight friction).
Remove the tool 2069-T.

b) Using a scale 1651-T, fitted with a dial jauge 2437-T, measure the distance between the face « b » of the arm hub and the face « a » of the bar.
This distance *increased by 0,05 mm* indicates the thickness of shims to be placed on the end of the bar.

c) IMPORTANT : Using the extractor 2068-T, bring the bar out by 2 to 3 mm :
Remove the extractor.

d) Place the shims on the end « a » of th bar and fit the tool 2069-T.
Tighten the nut B moderately until the shims are in contact with the end « a » of the bar.
NOTE : Never use the locking bolt (1) for this operation. Since the splines are very carefully machined, the bolt would be subjected to anormal stress.
Remove the tool 2069-T (be careful of the shims).

e) Fit the stop bolt (1) fitted with its lock-plate.
NOTE : Smear the threads of the bolt and the faces of the lock-plate with CURTYLON.
Tighten the bolt to 18 to 20 mAN (1.8 to 2 m.kg). Bend over the tab.

10. Insert the rod (5) of the suspension cylinder. Fit the stop pin (4).

11. Couple up the connector (2) (new seal) and tighten the collar (3).

12. Start the engine. Tighten the pressure regulator bleed screw.

13. **Bleed the rear brakes.**

14. Fit the rear wheels and lower the vehicle to the ground.

REPLACING THE BEARINGS, THE SEAL OR THE FRICTION WASHER OF THE SUSPENSION ARM HUB

G.43-2 c

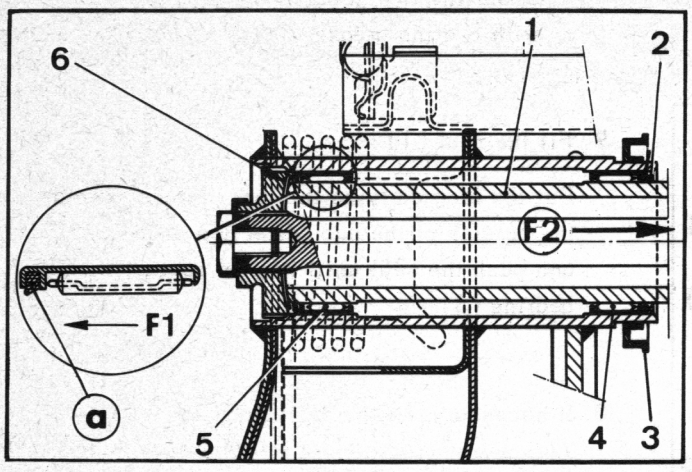

9366

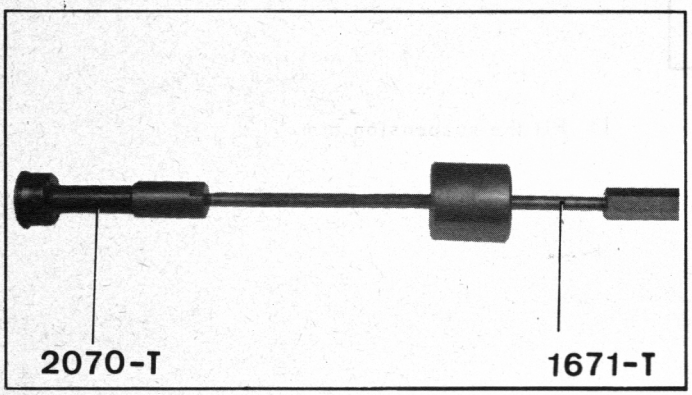

Manual 810-2

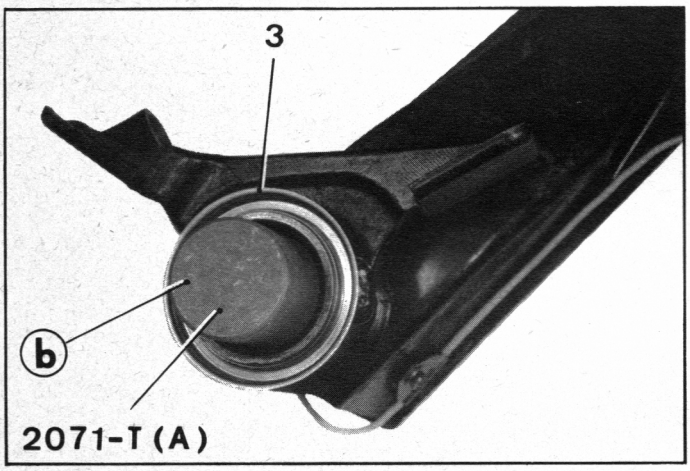

9369

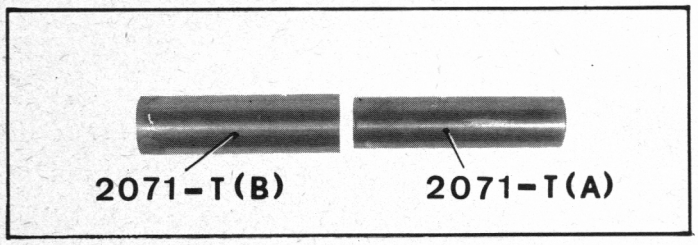

11357

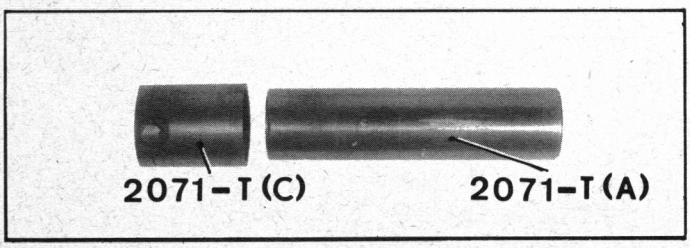

11356

REMOVAL

1. **Remove the suspension arm.**

2. If necessary, remove the deflector (3) of the arm hub.

3. **Remove the seal (2).**

4. **Remove the bearing from the hub :**

   Use an extractor 1671-T fitted with an end piece 2070-T.

5. **Remove the friction washer (6).**

FITTING.

6. Carefully clean the inside of the suspension arm hub and the support tube (1).
   Grease the bearing areas of the support tube.

7. **Insert the friction washer (6) :**

   Smear it with bearing grease on both faces and fit it into the hub.
   NOTE : When new, the friction washer is flat. Replace it each time it has to be removed.

8. **Fit the hub bearings :**
   IMPORTANT : These needle bearings are fitted with seals « a ». These must be fitted the right way round as shown on the drawing : the edge carrying the seal « a » must be placed in the direction of the arrow F1 for the bearing (5) and in the direction of the arrow F2 for the bearing (4).

   a) Place the guide mandrel A (assembly 2071-T) inside the suspension arm hub. Fit the bearing (5) on the mandrel A *the correct way round as described above.* Push it using the socket B until it comes into contact with the end « b » of the mandrel.

   b) Proceed in the same way for fitting the bearing (4), using the socket C. *Once again, this has to be fitted the right way round as described above.*

   NOTE : The correct position of the bearings is determined by the length of the sockets B and C.

c) Remove the assembly 2071-T.
Smear the needles of bearings (3) and (4) with bearing grease.

G.43-2c

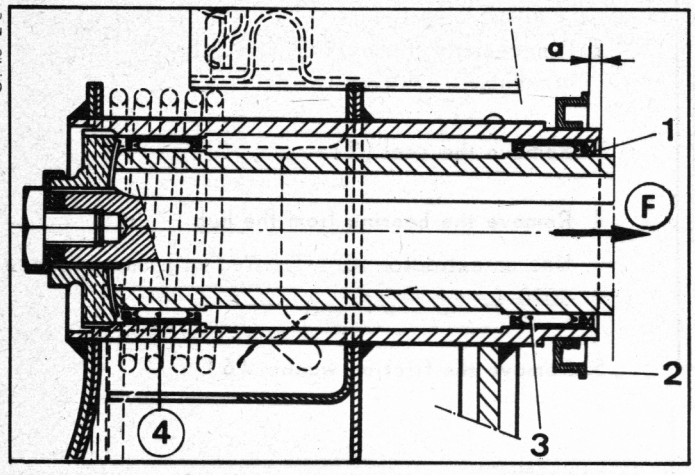

9. Fit the seal (1) :

Put the face carrying the inscriptions towards the outside of the hub (direction of the arrow F) and push the seal until it is in contact with the bearing (3).

10. If necessary, fit the deflector (2) :
This must be inset with relation to the edge of the hub by :

$$a = 2 \text{ to } 3 \text{ mm}$$

11. Fit the suspension arm.

REMOVING AND FITTING A BRAKE DISK, A HUB OR A BEARING.

8958

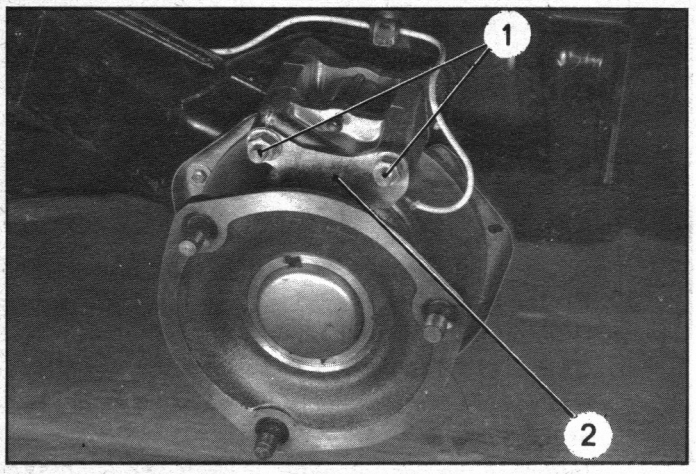

9080

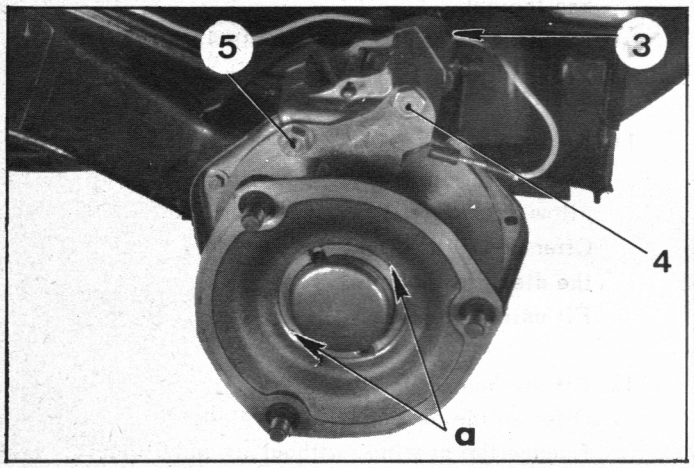

Manual 810-2

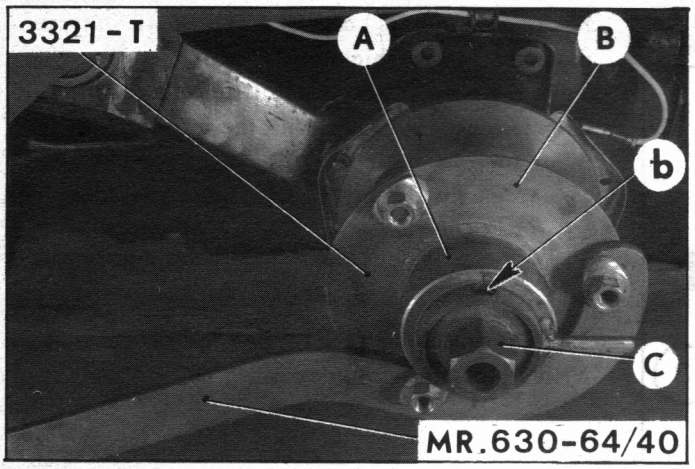

8967

REMOVAL.

1. Chock up the rear of the vehicle with the *wheels off the ground.*

2. Place the manual height control *in the normal position.*
   Slacken the pressure regulator bleed screw.

3. Remove the wheel.

4. **Remove the caliper :**
   NOTE : To avoid separating the two halfs of the caliper, proceed as follows :
   - Disconnect the pipe (3).
   - Partly slacken the nuts (1) holding the caliper.
   - Remove the bolt (4) (bleed screw side). Lift the suspension arm to release it.
   - Swing the caliper then replace the bolt (4) and tighten the nut (be careful of the feed tube (3)).
   - Remove the other bolt (5).
   - Remove the caliper (2).

5. **Remove the ring nut :**
   Using a 4 mm diameter drill, remove the peening at « a » locking the ring nut.
   Use the assembly 3321-T and the key 3304-T.
   Fit the plate B to the hub.
   Hold the hub using the tool MR. 630-64/40.
   Position the key 3304-T and the end fitting C.
   Screw in the nut A but do not tighten.
   Place a sprag in the hole « b » to lock the end fitting C and the nut A.
   Unscrew the ring nut.

6. **Remove the nut (6) :**
   Using a cold chisel, remove the metal bent over at « c ».

7. **Remove the hub :**
   Repeat the same operation as for removing the ring nut, without the key 3304-T.
   Hold the assembly using the tool MR. 630-64/40 (see figure).
   Using the bolt D of the assembly 3321-T, extract the hub.

8968

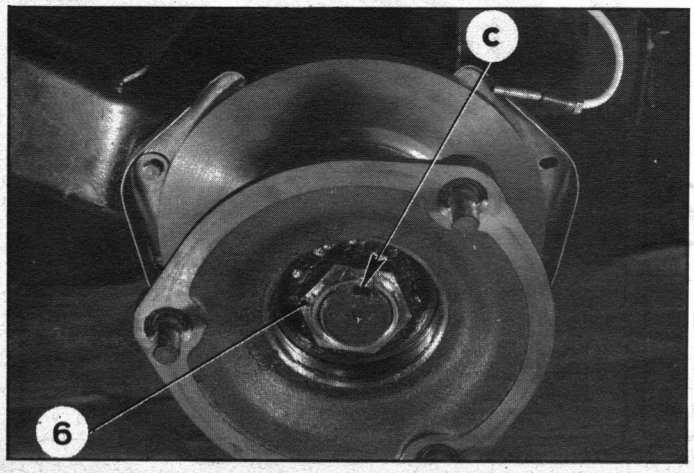

8969

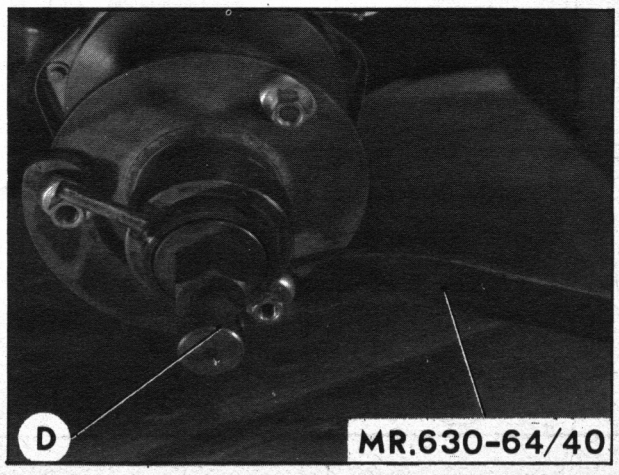

8990

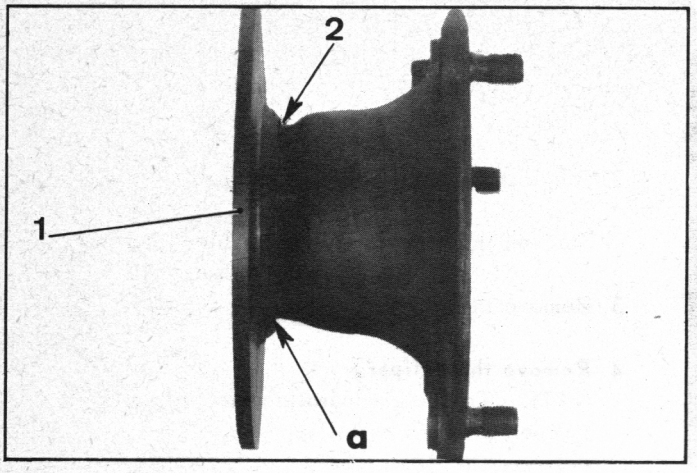

9004

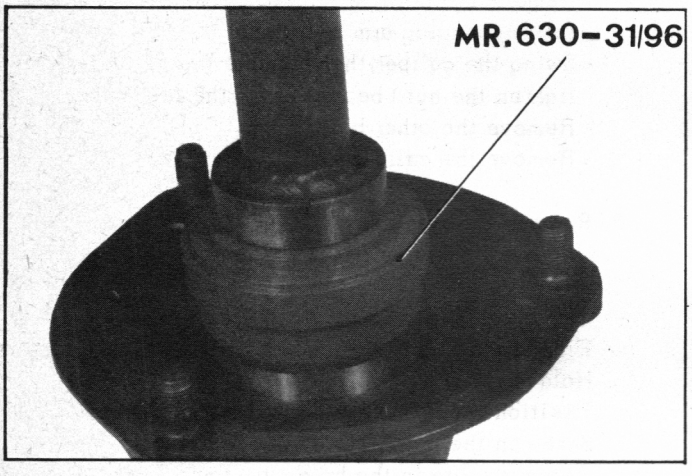

G. 45-3 b

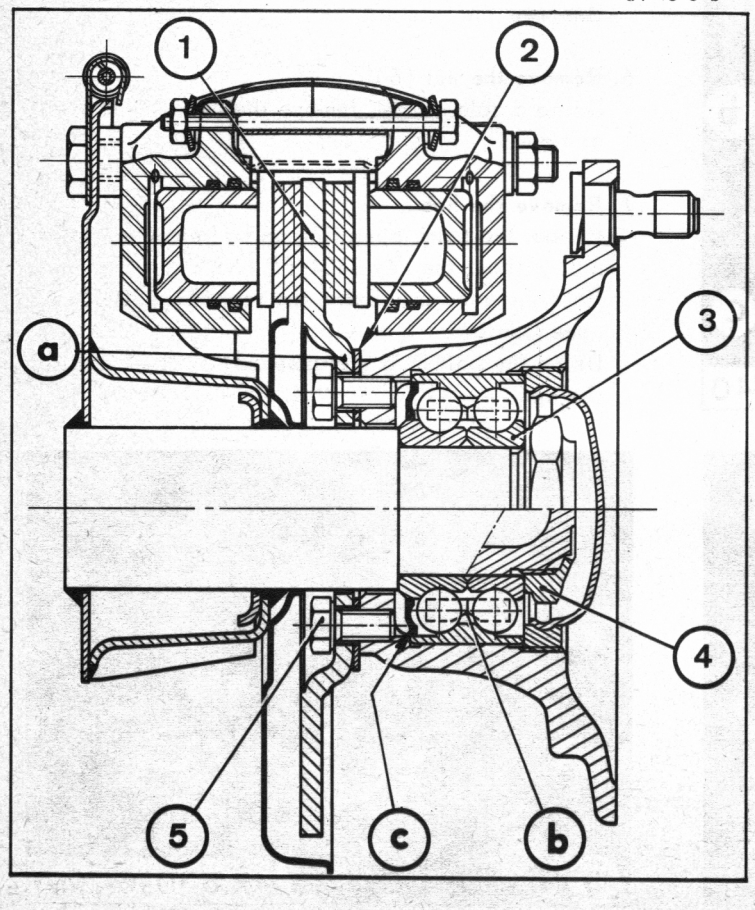

8. Remove the brake disk :

Remove the bolts (5) (see drawing) and separate the disk (1) from the hub.

Do not lose the bearing plate (2).

9. Remove the hub bearing.

FITTING.

10. Fit the brake disk :

Offer up the disk to the hub.

CAUTION : The disk (1) must be fitted the right way round (see drawing) : the edge « a » must be at the hub side.

Interpose the bearing plate (2) between the disk and the hub.

Fit and tighten the bolts (5) to 45 to 50 mAN (4.5 to 5 m.kg) (torque wrench).

11. Fit the bearing :

Remove the inner race (3) with its balls to allow access for the mandrel MR. 630-31/96.

Offer up the bearing (sealed side « c » facing the disk) to the hub.

Fit using the press.

12. Fit the hub :

Offer up the assembly to the stub axle.

Engage the bearing (without its inner race (3)) and start to position it by tightening the nut (4).

Remove the nut (4) and fit a spacer with inside diameter 37 mm, thickness 7 mm.

Refit the nut (4) and finish fitting the bearing.

Fit the inner race (3) (with the face « b » of the nylon race to the inside. The faces « b » of the two races should face one another) (see drawing).

Fit a new nut (face and threads greased).

Tightening torque = 350 to 400 mAN (35 to 40 m.kg) (torque wrench).

Using a mallet, bend the tab of the nut into the milled slot of the stub axle.

9006

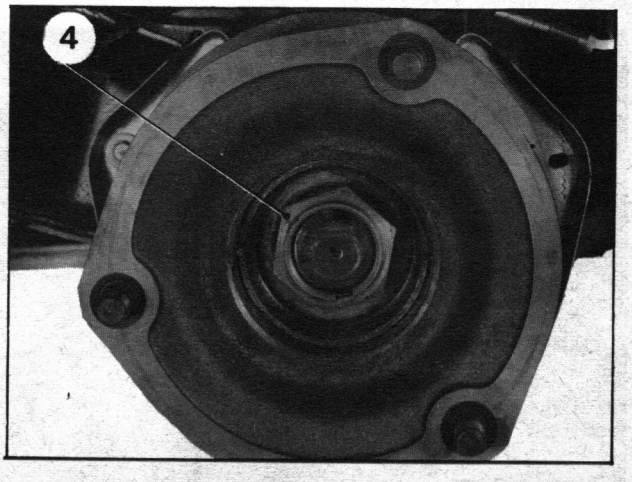

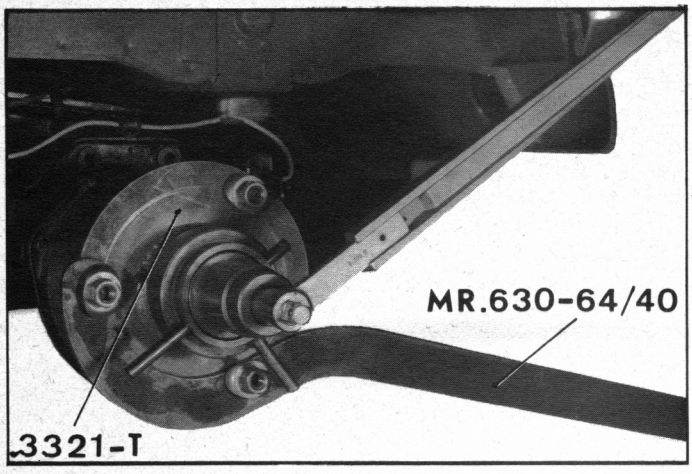

9008

13. Fit the ring nut :

Use the assembly 3321-T and the key 3304-T.
Hold the hub using the tool MR. 630-64/40.
Put bearing grease in the plug of the ring nut.
Fit the ring nut having *greased both faces and the threads.* Tighten to 350 to 400 mΛN (35 to 40 m.kg) (torque wrench).
Lock it in position by peening with a punch at two diametrically opposed points at « a ».

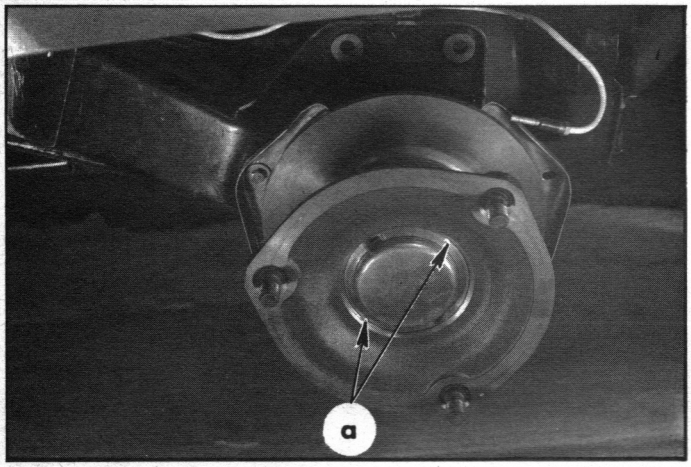

8966

14. Fit the brake caliper :

Offer up the caliper to the disk and carefully position the brake pads.
Fit the bolt (1) *with its head to the inside* and fit the nut without tightening it (contact washer).
Remove the other bolt (2) and swing the caliper to position it.
Refit the bolt (2) *with its head to the inside.*
Tighten the nuts (3) (contact washer) to 36 to 40 mΛN (3.6 to 4 m.kg) (torque wrench) (face and threads greased).

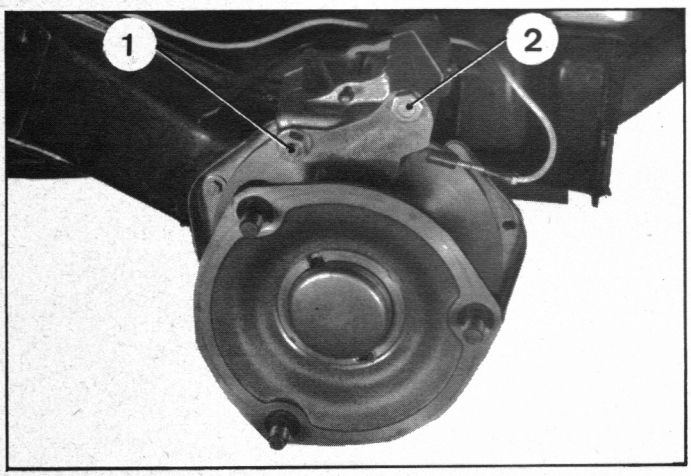

9080

15. Fit the union (4) :

Replace the seal.
Tighten the union to 8 to 9 mΛN (0.8 to 0.9 m.kg).

16. Start the engine.
Tighten the pressure regulator bleed screw.
Place the manual control *on high position.*
Where appropriate, move the rear suspension arms to cause the pressure to rise.
Bleed the caliper and check for leaks.

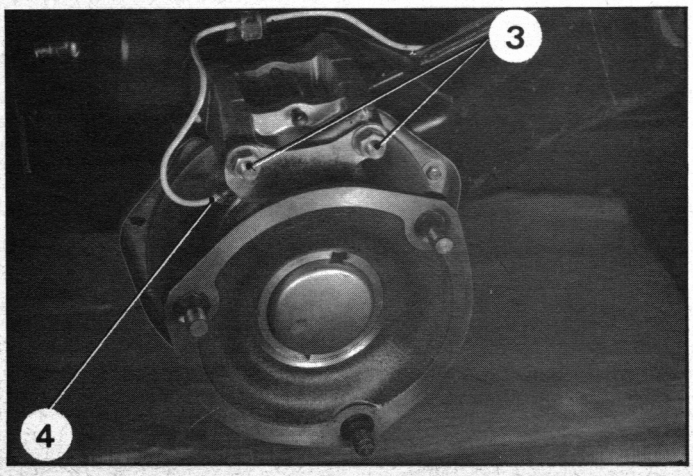

8958

17. Fit the wheel.
Lower the vehicle to the ground.

REPLACING THE REAR AXLE UNIT

8537

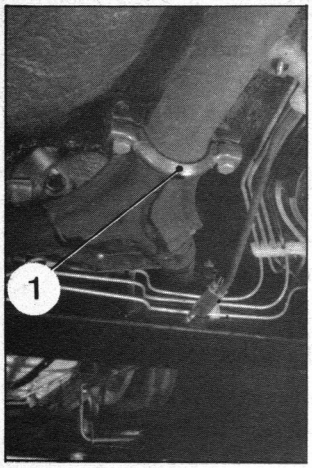

8548

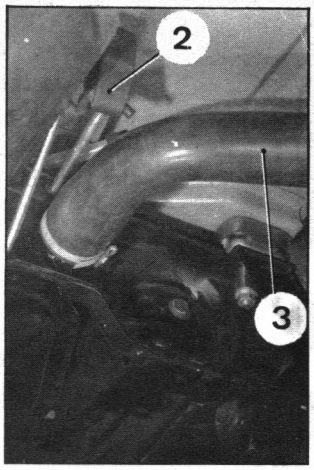

9106

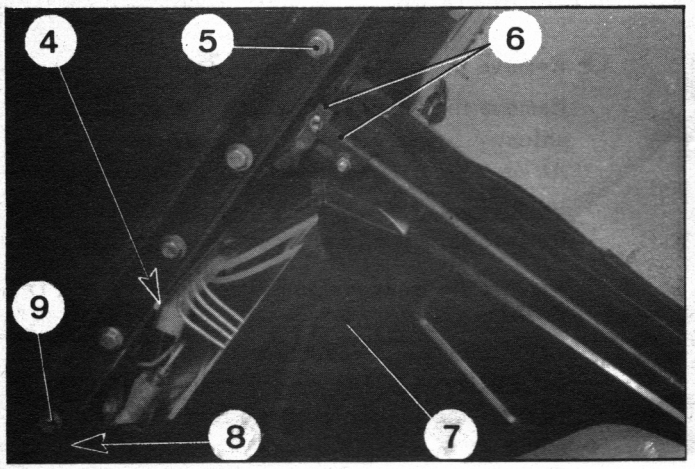

Manual 810-2

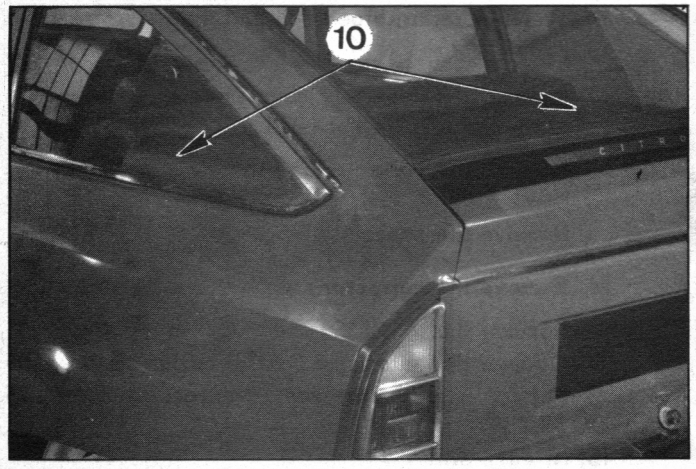

8332

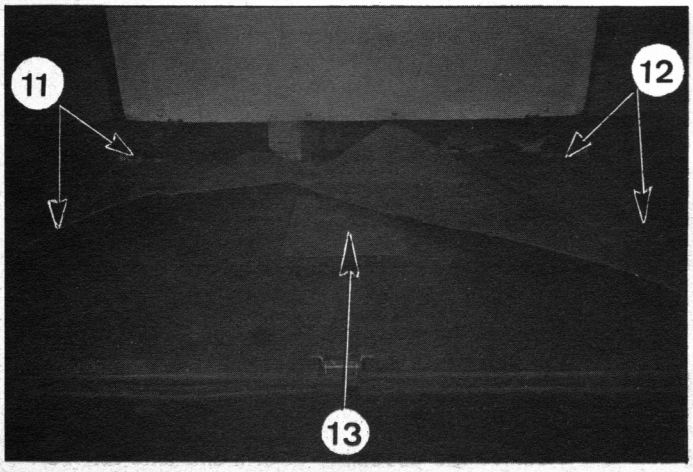

9114

REMOVAL

1. Put the vehicle in the *high position* so that a jack can be put under the rear.

2. **Lower the pressure in the circuits :**
   Slacken the screw on the pressure regulator and place the lever in the *normal position.*
   Wait until the rear suspension has stabilized and then put the control lever in the *high position* until the vehicle settles completely.

3. Raise and chock the rear of the vehicle with the *wheels off the ground.*
   Remove the rear wheels.

4. Disconnect the cable from the negative terminal of the battery.

5. **Remove the exhaust pipe and silencer assembly :**
   Remove :
   - the collar (1),
   - the flexible supports (2).

6. **Disconnect the tank filling pipe (3) :**
   Drain the tank if necessary.

7. *Underneath the vehicle :*
   Disconnect the manual control rods (6).
   Remove the two bolts (5) and (9) holding the protective plate (7).
   Remove the bolt (4) holding the pipe bracket.
   Disconnect the union (8).

8. **Swing the rear seat forward :**
   Slide the embellishers (10) towards the rear to uncover the upper mounting bolts and remove these bolts.
   Swing the seat forward and chock it in that position.

9. In the boot, unstick the carpet at both sides to give access to the fastenings (11) and (12) of the suspension unit flexible mountings.

10. **Remove the axle unit :**

    a) Remove the inspection plate (13) in the floor of the boot.

    b) Place a jack, fitted with support 2510-T, under the suspension unit, equidistant between the spheres and the suspension arm swivels.
    Remove the securing nuts (11) and (12).
    Using a jack, lower the unit by no more than 10 cm, so that the different pipes can be disconnected through the inspection plate (13).

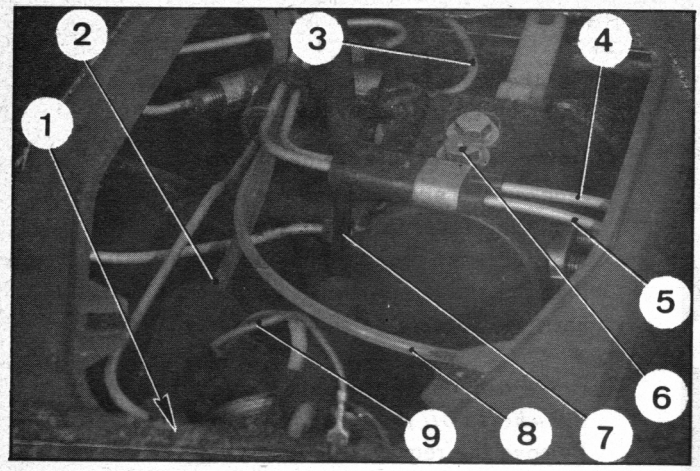

8760

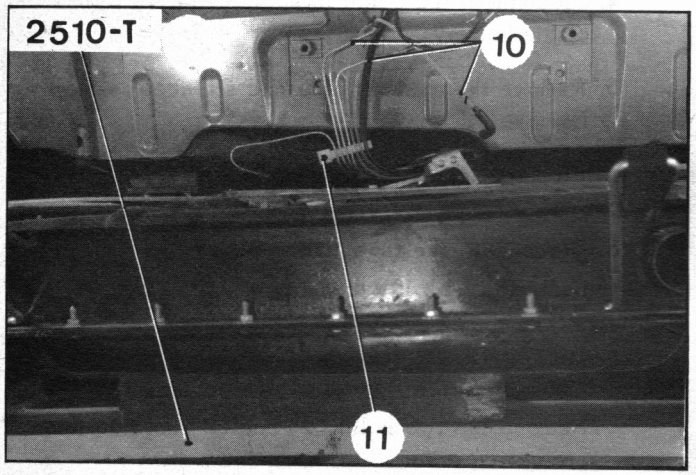

9117

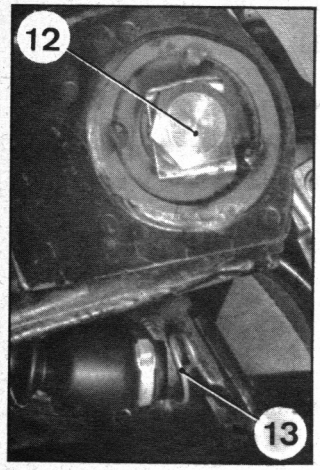

8735

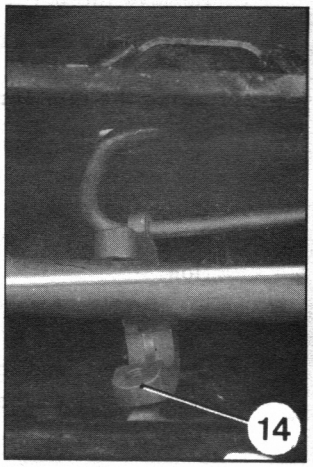

9130

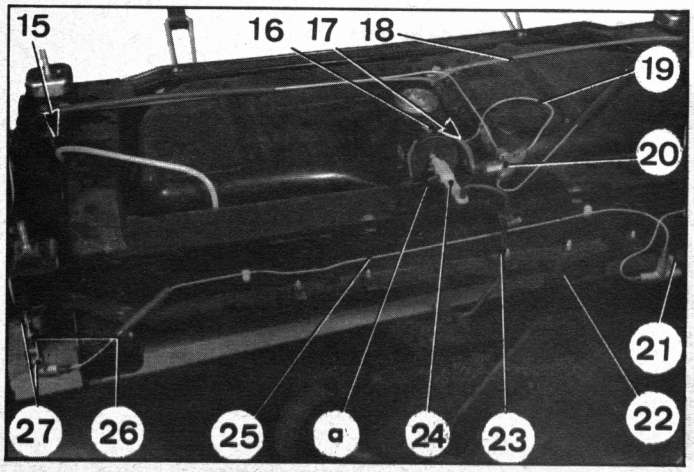

9121

c) Remove the bolt (6) from the collar holding the pipes.
Disconnect :
- the pipes (4) and (5) and the flexible pipe (8) from the corrector,
- the flexible pipe (2), from the overflow return union,
- the flexible pipe (7) from the petrol tank gauge unit,
- the tank vent pipe (1),
- the leads (9) from the petrol gauge,
- the tube (3) from the four-way.

d) Completely lower the suspension unit.

CAUTION : Make sure that the pipes (10) and the pipe support (11) do not foul the unit.

STRIPPING DOWN

11. Remove the brake feed pipe (25) :

Remove the bolt (21) holding the three-way union.
At each side, slacken the two collars (27) and the union (26).
Remove the pipe (25).

12. Remove the suspension cylinder feed pipe (19) :

Disconnect :
- the union (17) from the corrector,
- the unions (15) from each cylinder.

Remove the bolt holding the four-way union (20).
Remove the assembly consisting of pipe (19), the overflow return pipe (18) and the four-way union (20).

13. Remove the assembly consisting of support plate and torsion bar (23) :

Remove the bolts holding the plate and the bracket (22).
Remove the assembly.

14. Remove the corrector :

Remove the bolt (16).
Slacken the automatic control collar on the anti-roll bar, and free its end « a » from the lever (24).

15. *At each side :*

Remove :
- the pin (13) and detach the end of the rod,
- the bolt (12).

16. Remove one suspension arm only :

Remove the arm at the side where the lateral play shims are placed (do not lose them) using the extractor 2068-T.

17. Remove the other suspension arm and the anti-roll bar :

Remove the bolt from the clamp (14) holding the automatic control system.
Open out the clamp (14) to release the anti-roll bar.
Remove the assembly of arm and anti-roll bar.

9121

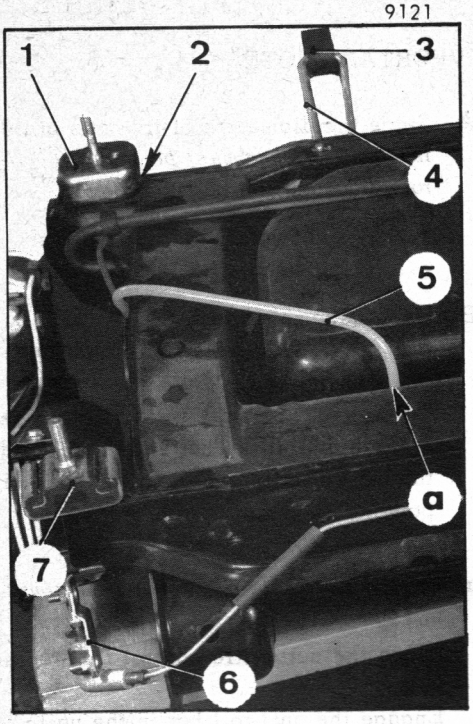

10517

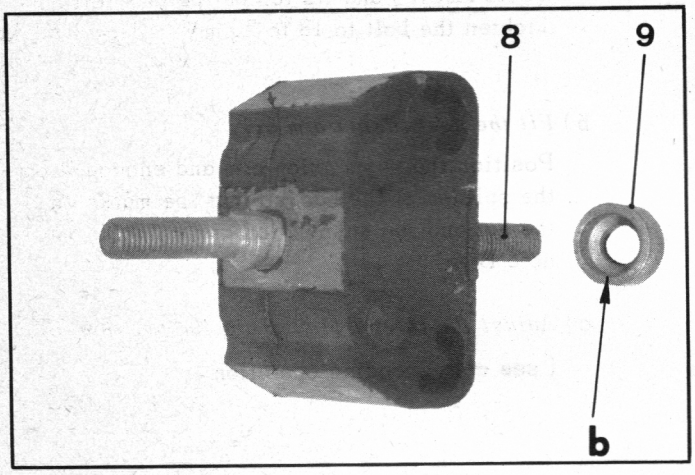

9121

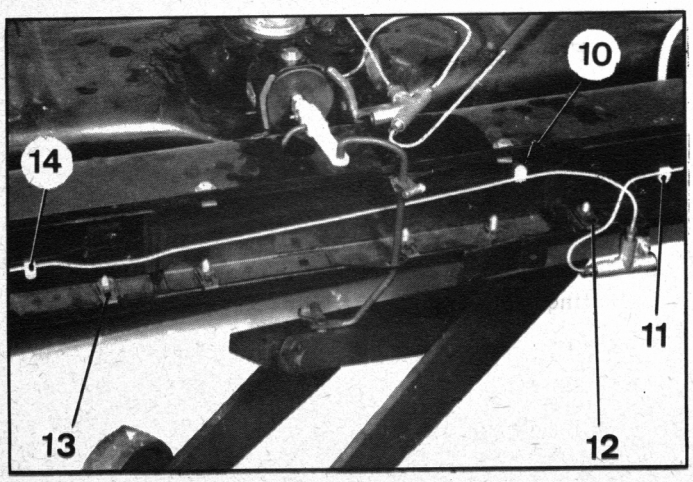

18. Remove the suspension cylinders :
At each side :

Remove the vent pipe (5).
Remove the bolt and collar holding the cylinder.

19. Remove the flexible supports (1) and (7) :
Do not lose the shims (2) and the brackets (6).

20. Remove the exhaust supports (4).

21. Remove the petrol tank.

22. Remove the travel stops.

23. Remove the clamps (12) and (13) and the plastic supports (10), (11) and (14).

BUILDING UP

24. Fit :
- the clamps for fixing the collars that hold the suspension cylinders,
- the clamps (12) and (13) for holding the tank.

25. Fit the plastic supports (10), (11) and (14).

26. Fit the travel stops (using soapy water only).

27. Fit the petrol tank :

Tighten the bolts (contact washer).
Connect up the inlet pipe and fit the filter.

28. Fit the exhaust supports :

Replace the rubber blocks (3) if necessary.
Fit the locking pin.

29. Fit the elastic supports :

a) Fix the supports on the suspension unit :
- *Front supports (7) :* Place a bracket (6) and a contact washer under the nut holding each support on the unit.
- *Rear supports (1).* Fit :
  - a shim (2) under each support,
  - a spacer (9) and a contact washer under the nut holding each support on the unit.

NOTE : Do not tighten the nuts.

b) Fit a spacer (9) on each mounting stud (8) of the supports on the chassis.

NOTES :
- the greatest inside diameter « b » of the spacer (9) should face the flexible mounting.
- the spacers (9) of the front and rear supports are different.

30. Fit the suspension cylinders :

Place the vent pipe (5) in the hole at « a » of the unit.

9129

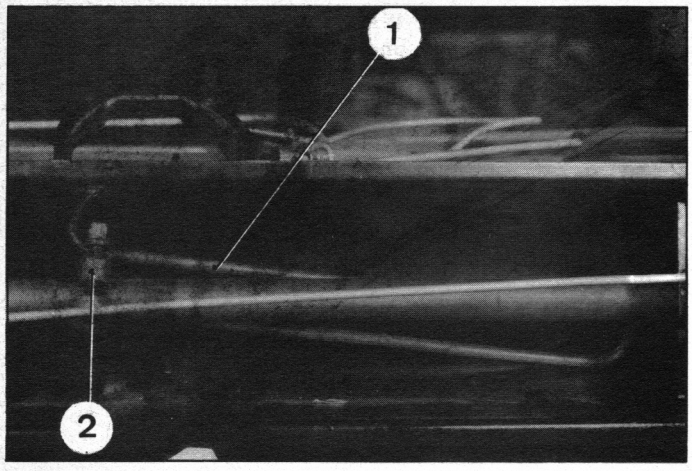

9121

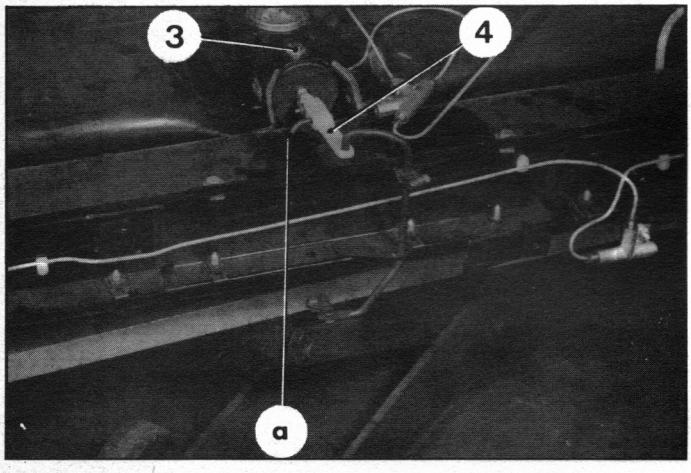

12 029

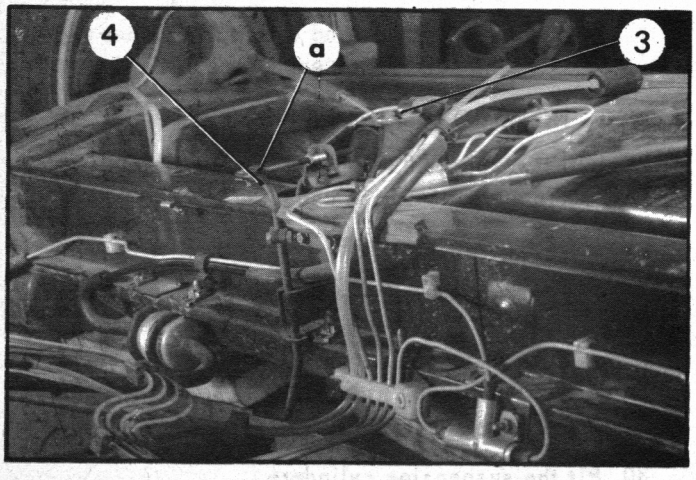

31. Fit the suspension arms :

IMPORTANT NOTES :

A - Since the diameters of its ends are different, *the anti-roll bar must be fitted the right way round* (when the bar is removed).

right-hand side : 30 splines
left-hand side : 32 splines

B - Once assembled with the anti-roll bar, *the two suspension arms must have their centre lines in the same plane.*
To do this, the mark (electric scriber) at each end of the bar should coincide with the mark (spline missing) of the corresponding suspension arm.

a) *Fit the assembly of suspension arm and anti-roll bar :*
Place the automatic control rod (1) in the unit.
Engage the anti-roll bar in the unit, guiding the clamp (2). Position the suspension arm and fit the bolt to the collar (2).
Fit the locking bolt (smear the threads with CURTYLON) and its tab on the anti-roll bar.
Tighten the bolt to 18 to 20 mΛN (1.8 to 2 m.kg)

b) *Fit the suspension arm only :*
Position the suspension arm and engage it on the splines of the bar, so that the marks on the bar and the suspension arm coincide (see note B).

c) *Adjust the lateral play of the suspension arms.*
(see corresponding operation).

32. Fit the height corrector :

Fit the end « a » of the automatic control rod (1) into the lever (4).

Position the corrector at the centre of the mounting slot. Tighten the bolt (3) (contact washer).

9121

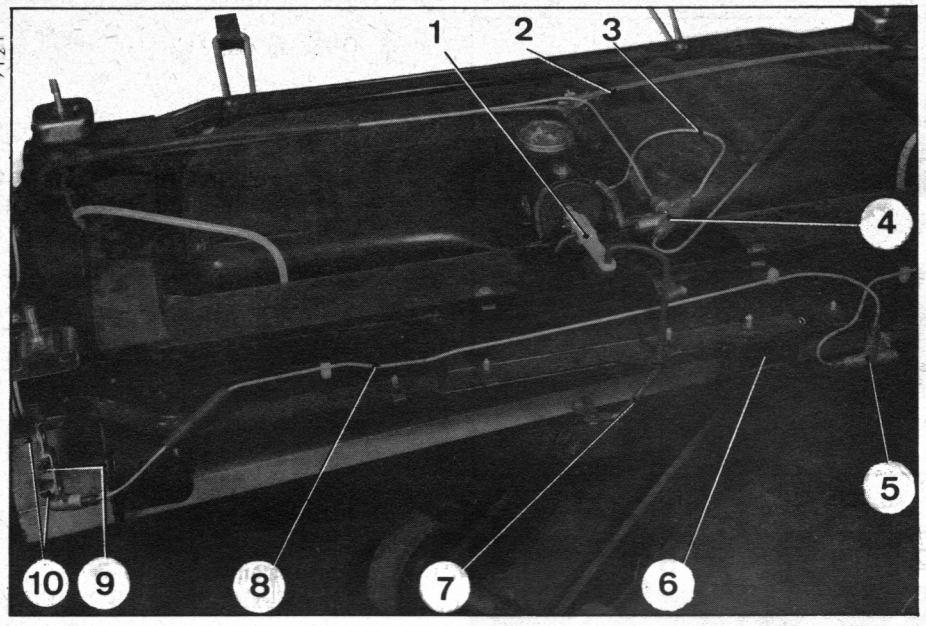

G.43-3

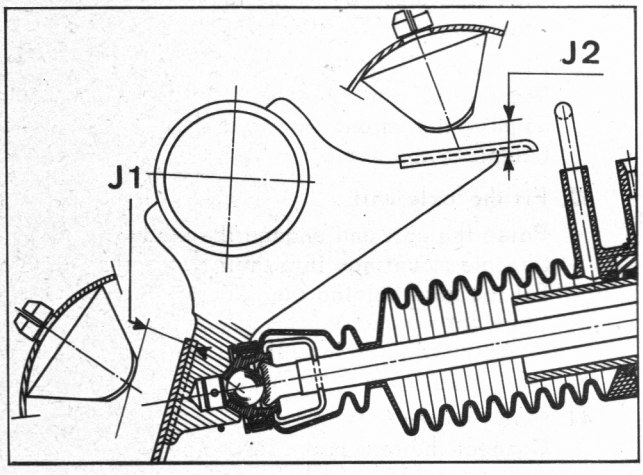

Manual 810-2

9119

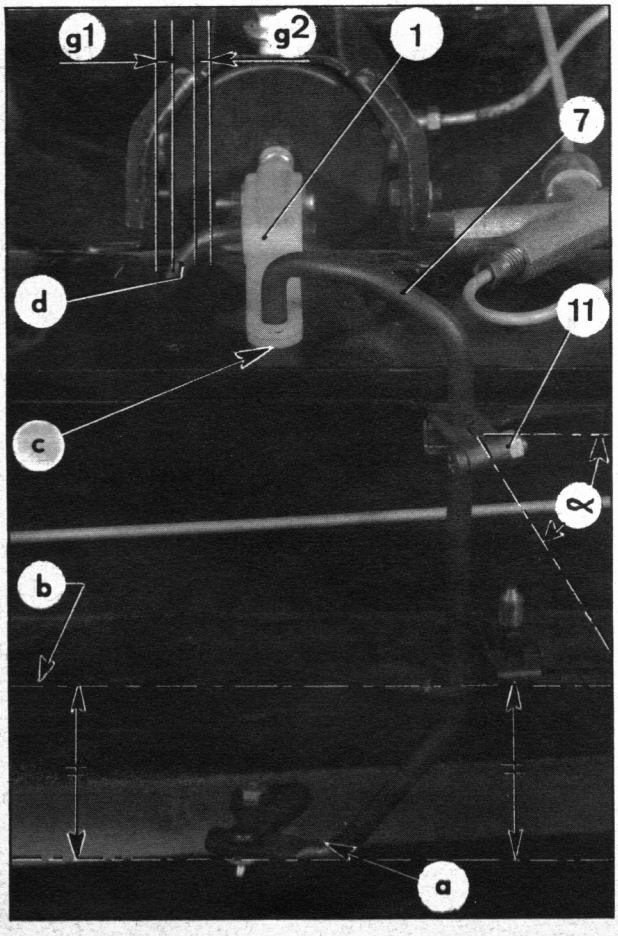

33. Fit the assembly of support plate and manual control rod (7) :

Position the assembly by engaging the end of the rod (7) in the lever (1). Interpose the bracket (6) and tighten the bolts.

34. Fit the suspension cylinder feed pipe (3) :

Offer up the assembly of pipe (3); leakage return pipe (2) and the four-way connector (4).
Tighten the union by hand.
Connect the leakage return pipe (2) to the cylinder dust excluder.
Tighten the union to 8 to 9 mΛN (0.8 to 0.9 m.kg)
(Replace the seals).

35. Fit the brake feed pipe (8) :

Fix the three-way connector (5).
At each side :

- tighten the union (9) by hand,
- tighten the two collars (10),
- engage the pipe (8) in the plastic supports.

Tighten the union to 8 to 9 mΛN (0.8 to 0.9 m.kg)
(Replace the seals).

36. Preset the automatic height control :

Using a jack, raise and support the suspension arms so that J1 = J2 (see drawing).
Check that the corrector is in the rest position, and tighten the collar on the anti-roll bar.
Make sure that the end « d » or the rod is positioned centrally in the hole in the unit (g1 = g2).

37. Set the position of the manual height control rod (7) :

Adjust the collar (11) so that :

- the lower part « a » is parallel to the edge « b » of the plates of the unit.
- the upper end « c » projects not more than 1 mm beyond the lower face of the lever (1).
- the centre line of the collar (11) makes an angle ∝ = 45° to 60° with the edge of the unit plates.

10517

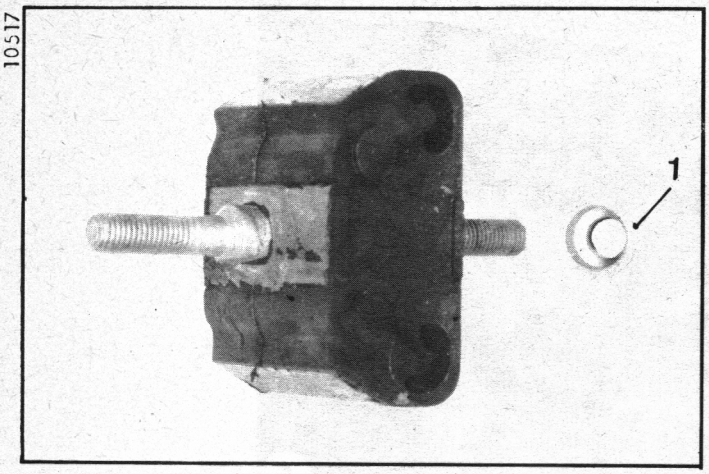

8472

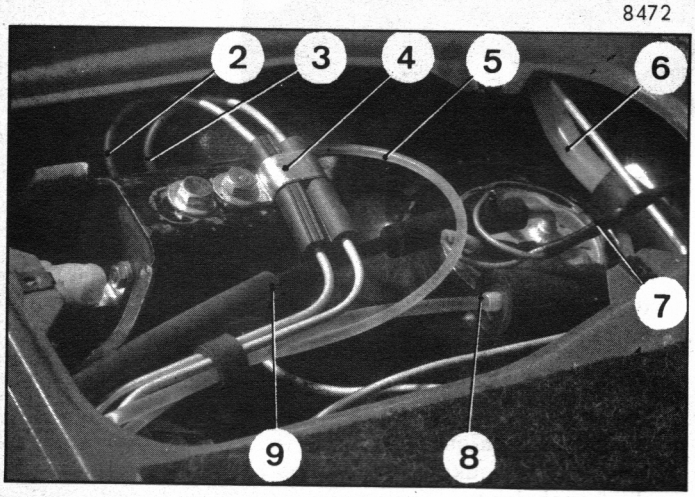

8537

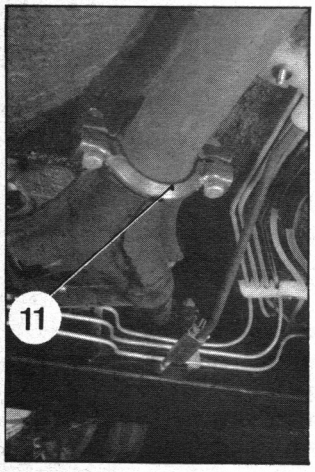

8760

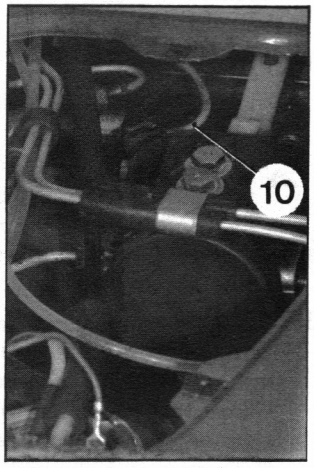

9106

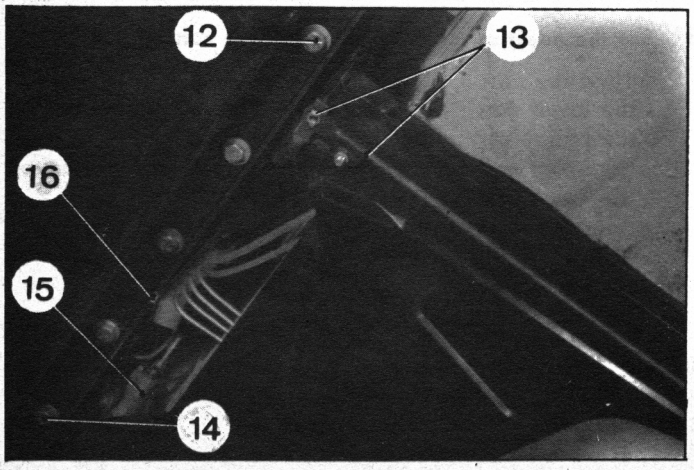

FITTING

38. Offer up the axle unit :

a) Check that the spacers (1) are in position on the flexible support studs of the unit.

b) Using a jack fitted with a crossmember 2510-T, offer up the suspension unit to the chassis to within about 10 cm so that the different pipes can be positioned.

CAUTION : Carefully guide the hydraulic circuit pipes to avoid damaging them.

39. Connect up the hydraulic circuit pipes :

Connect the pipes (2) and (3) and the flexible pipe (5) to the corrector.
Connect the pipe (10) to the four-way union.
(Tighten the union by hand).
Connect :
- the flexible pipe (8) to the cylinder overflow return union,
- the flexible pipe (9) to the petrol intake pipe,
- the vent pipe (6) to the tank,
- the leads (7) to the petrol gauge.

Fit the collar (4) to the rubber sheaths.
Tighten the mounting bolt (contact washer).
Tighten the unions to 8 to 9 mAN (0.8 to 0.9m.kg)
(Replace the seals).

40. Fit the axle unit :

Raise the unit and engage the studs of the flexible mountings into their chassis housings.
Fit the nuts holding the unit to the chassis
(contact washer and thick washer).
Tighten the nuts on unit and chassis to 34 mAN
(3.4 m.kg).

41. *Under the vehicle :*

Connect the rear brake feed pipe to the three-way union (15). Tighten to 8 to 9 mAN (0.8 to 0.9 m.kg). (Replace the seal).
Fix the pipes with the bracket (16). Tighten the bolt (contact washer).
Fit the protective plate. Tighten the bolts (12) and (14) (contact washer).
Connect up the manual control rods (13).

42. Fit the assembly of exhaust pipe and silencer :

Fit the flexible mountings of the silencer.
Fit the collar (11).

43. Connect up the petrol tank filler pipe.
Tighten the collar.

44. Connect the cable to the negative terminal of the battery.
Start the engine.
Tighten the pressure regulator bleed screw.
Check that all the unions are leak-tight.

45. Lower the vehicle to the ground.

46. Adjust the heights :
Front = 189 ± 10 mm Rear = 272 ± 10 mm

47. Check the operation and setting of the manual height control.

48. Bleed the rear brakes.

49. Fit the access plate to the floor of the boot.
Stick the carpet back in place on the boot walls.

50. Fix the rear seat.

REPLACING A REAR SUSPENSION ARM SUPPORT TUBE.

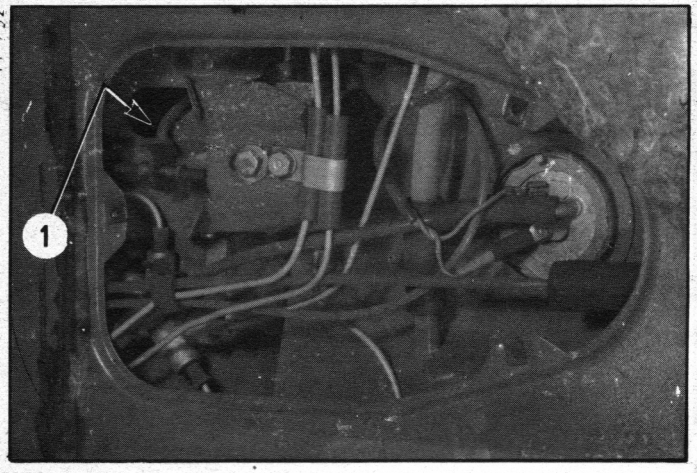

11 752

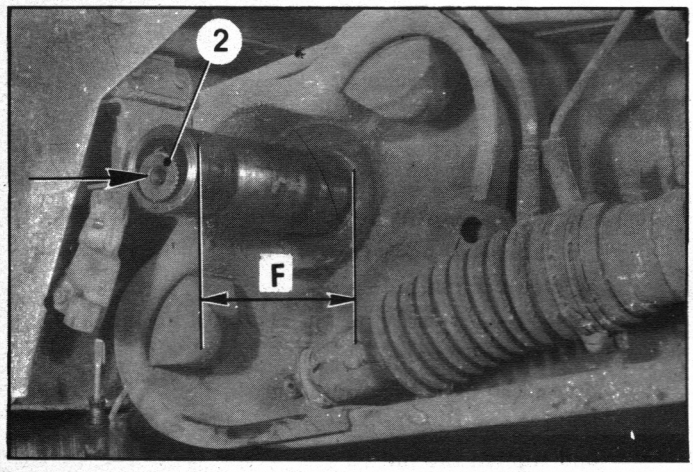

Manual 810-2

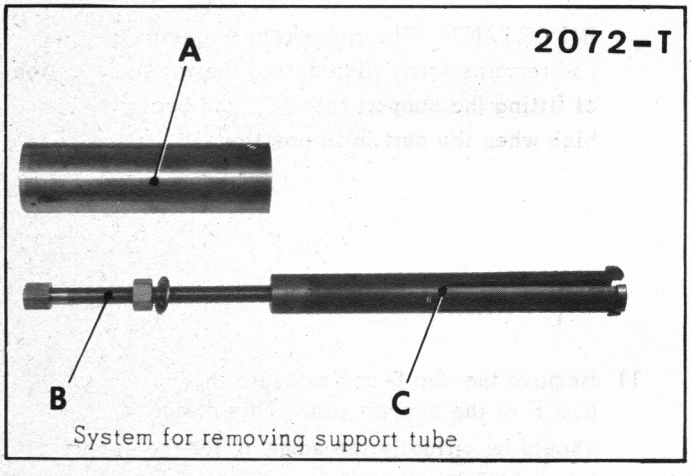

System for removing support tube
11 766

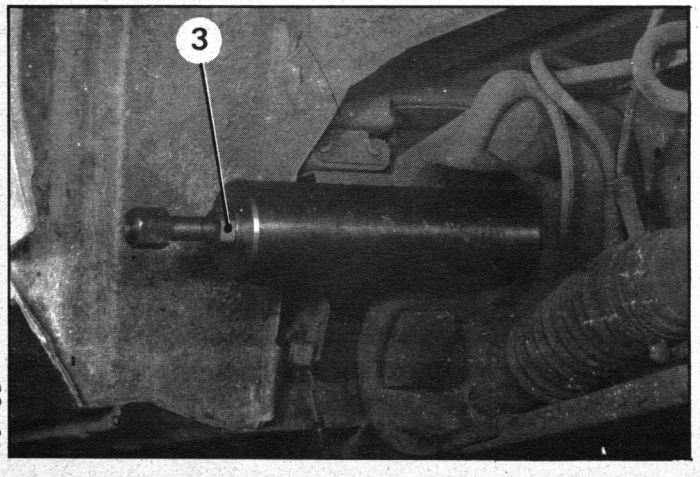

10 756

REMOVAL.

1. With the suspension in the high position, place a jack under the rear of the vehicle.

2. **Release the pressure in the circuits :**

   a) Slacken the pressure regulator bleed screw and place the manual height control *in normal position*.

   b) Wait until the rear suspension has stabilized and then place the control *in the high position* until the vehicle settles completely.

3. Raise and chock the rear of the vehicle with the wheels off the ground. Remove the wheels (MR. 630-64/40).

4. **Remove the rear suspension arm :**
   (See corresponding operation).

5. Remove the inspection plate on the floor of the boot.

6. Slacken by two or three turns the automatic height control bolt (1) on the anti-roll bar so that the bar can slide in the collar.

   CAUTION : The bolt must remain in place on the collar of the automatic height control.

7. Move the anti-roll bar (2) in the suspension unit *(direction of the arrow)* so that the section **C** of tool 2072-T can be inserted.
   NOTE : To facilitate the subsequent positioning of the support tube, measure and note the distance « F » by which it projects.

8. **Remove the suspension arm support tube :**
   Fit the section **C** of tool 2072-T in the support tube.
   Fit the cap **A** over the tube.
   Screw the threaded rod **B** some 15 to 20 mm into the section **C** and push the assembly as far as it will go into the support tube until the dogs engage in the latter (sharp noise).
   Tighten the nut (3) so as to free the support tube from its housing in the suspension unit.

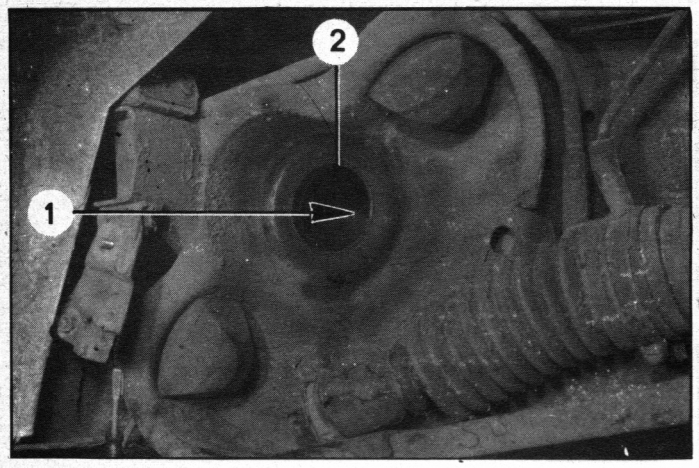

FITTING.

9. Clean the bearing surfaces (1) and (2) of the suspension arm support tube in the suspension unit.

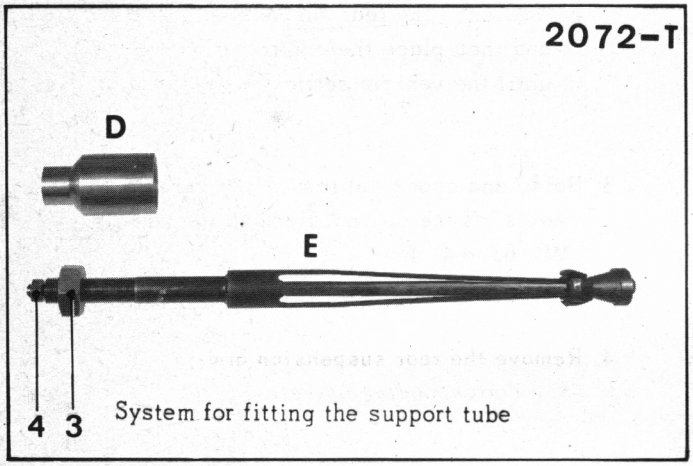

10 765 System for fitting the support tube

10. Fit the support tube :

Fit a new support tube in the unit.
Insert the section **E** of the tool 2072-T into the support tube, after removing the nuts (3) and (4).
Fit the cap **D** and screw up the nuts (3) and (4) by a few threads.
Push the assembly as far as it will go into the suspension unit.
Screw the nut (4) fully home.
Hold the assembly centrally in the support tube and tighten the nut (3).

IMPORTANT : The tightening torque of the nut (3) remains fairly high during the whole operation of fitting the support tube (5) and becomes very high when the part is in position.

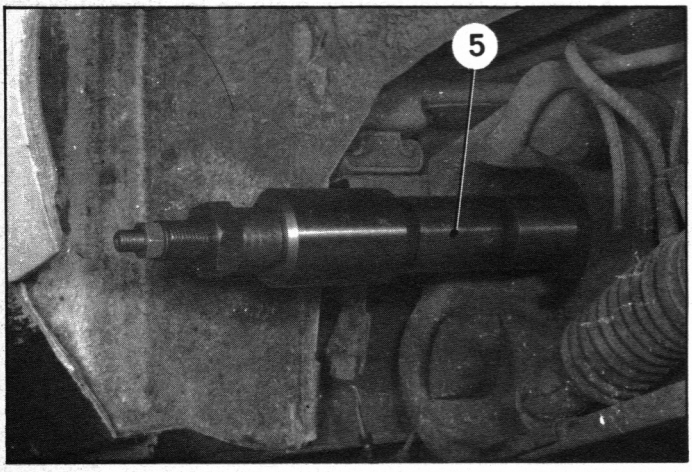

10 758

11. Remove the cap **D** and measure the projected part F of the support tube. This distance should be virtually the same as for the support tube which has been removed.
Remove the tool 2072-T and fit the anti-roll bar, without tightening the bolt holding the collar of the automatic height control.

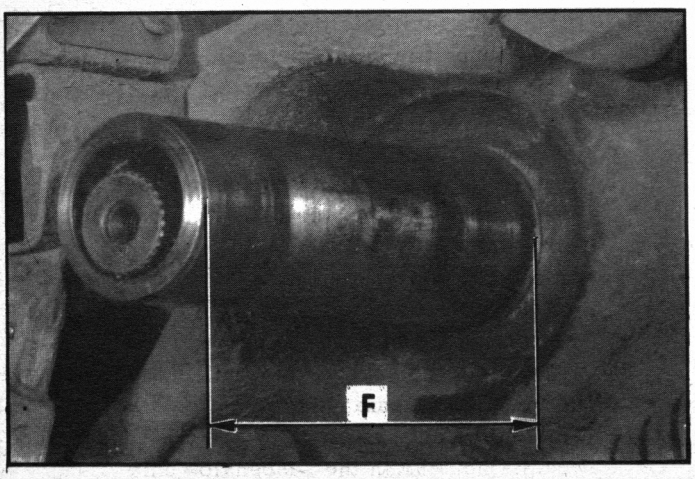

10 754

12. Fit the suspension arms and adjust the lateral play of the anti-roll bar (*see corresponding operation*).

G. 43-3

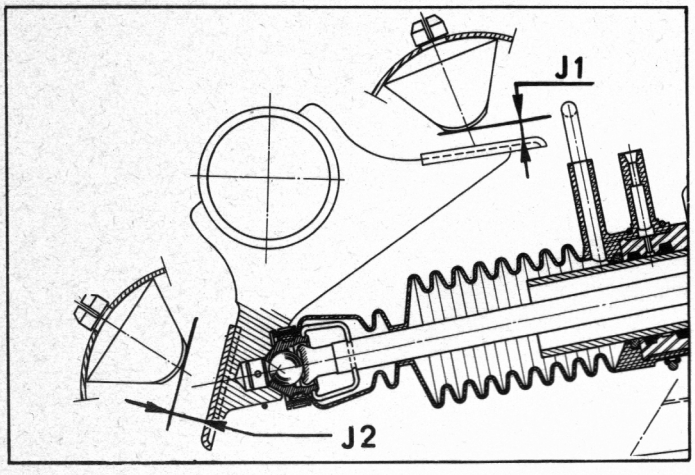

13. Preset the automatic height control :

Using a jack, raise and support the suspension arms so that : J1 = J2 (see drawing).

Check that the corrector is in the rest position and tighten the automatic control linkage collar on the anti-roll bar.

14. Bleed the rear brake circuit.

15. Fit the wheels and lower the vehicle to the ground.
Tighten the wheel nuts.

16. Check the rear height.

17. Fit the inspection plate to the floor of the boot.

REMOVING AND FITTING A FRONT ANTI-ROLL BAR

8442

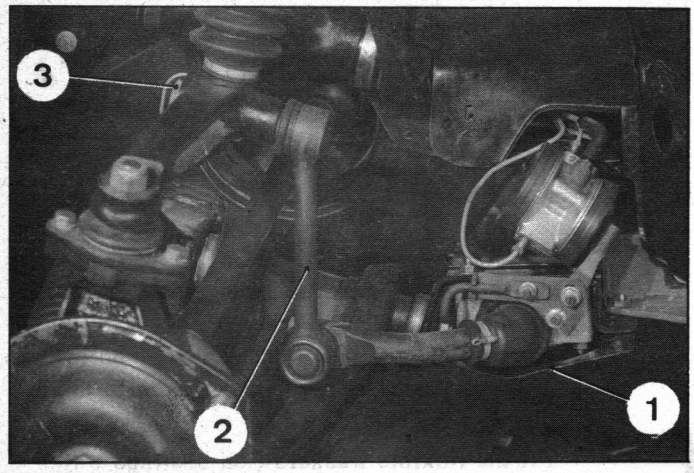

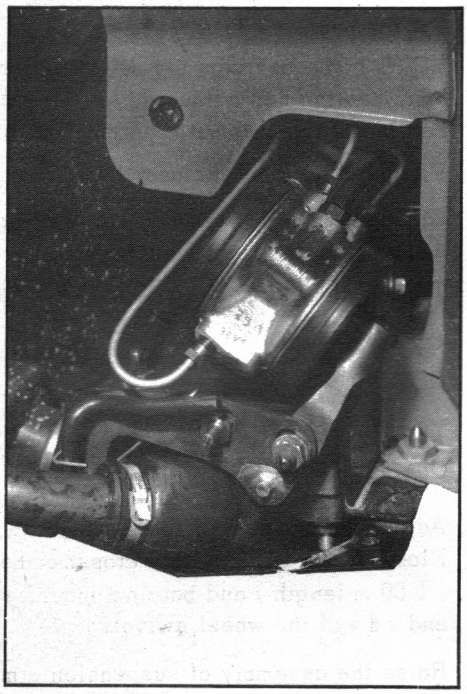

8756

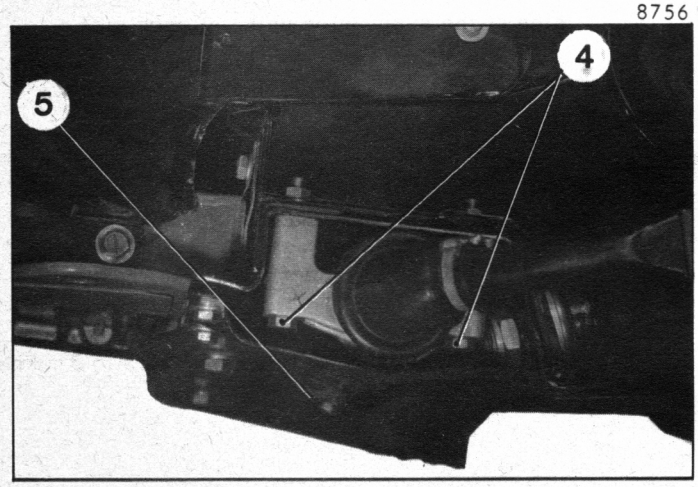

REMOVAL

1. Place the height control to the *high position* so that a jack can be pushed under the vehicle. Chock up the front of the vehicle with *the wheels off the ground.*

   Slacken the bleed screw on the pressure regulator and place the manual control in the *normal running position.*

2. Remove the front wheels.

3. *On the right-hand side,* remove the protective housing for the height corrector

4. Remove the castellated nuts (3) and uncouple the connecting rods (2) from the upper suspension levers.

5. Remove the plates (1) which protect the anti-roll bar bearings.

6. Disconnect the automatic height control rod from the anti-roll bar : remove the bolt from the clamp (5) and open this out (the automatic control system should remain in position on the suspension unit).

7. Remove the bolts (4) holding the anti-roll bar bearings.

   Remove the assembly of bar and bearings.

   NOTE : Do not lose the plastic bearing of the automatic control rod, located in the right-hand bearing.

8. If necessary, disconnect the two connecting rods from the anti-roll bar. (Extractor 1892-T).

9. Strip down the anti-roll bar.

Manual 810-2

8952

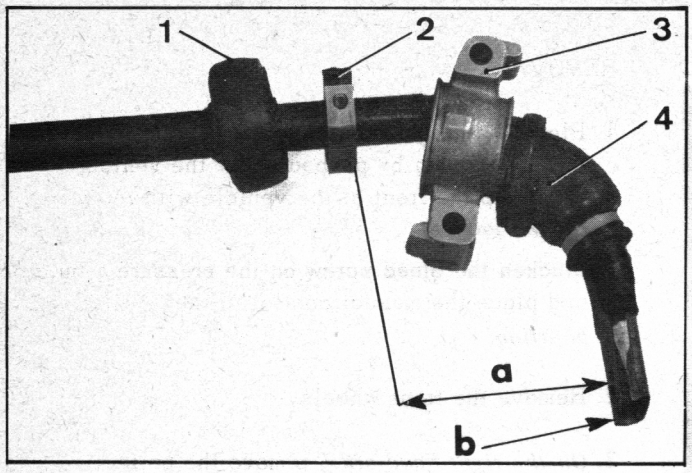

9055

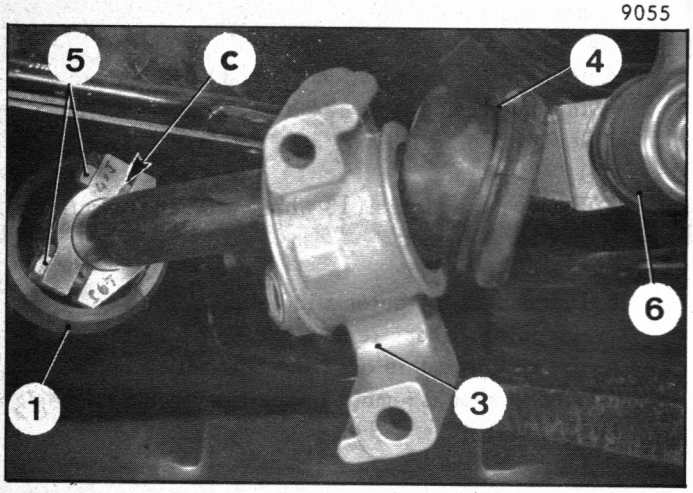

9056

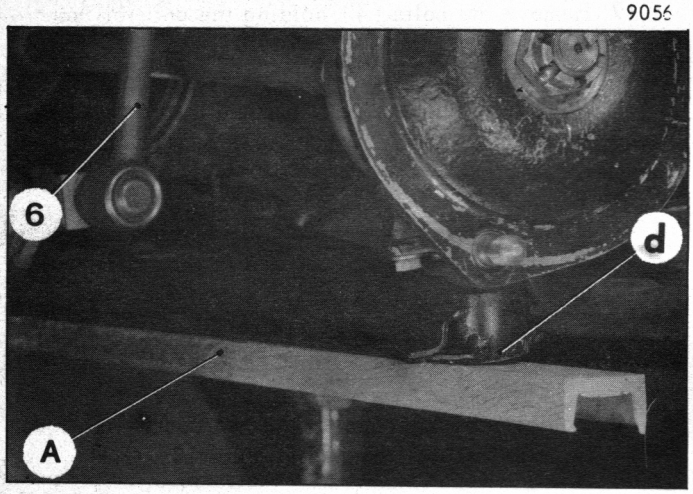

8952

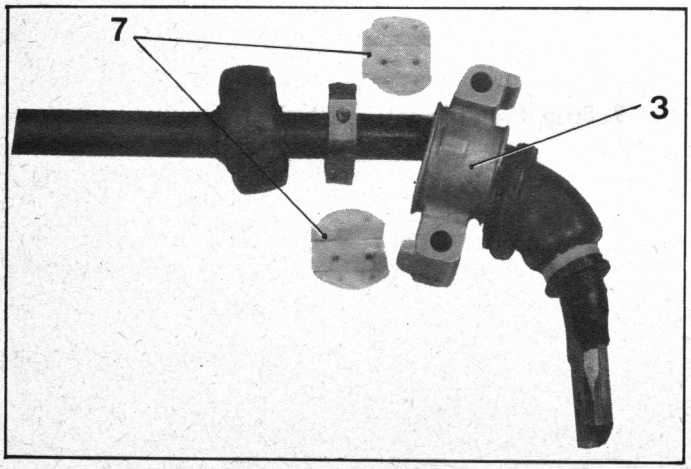

FITTING

10. Prepare the anti-roll bar :

At each end of the bar :

a) Fit the inner dust exluder (1).

b) Fit the clamp (2) (the two clamps are identical).

Adjust the position of the clamp so that :

$a = 93$ *mm*

(distance between the outer face of the clamp and the machined part « b » of the bar).

Orientate the clamp so that the heads of the bolts (5) face forward and that the section « c » of the half-clamps are perpendicular to the plane of the bar.

Fit the flexible washers (on bearings which are so fitted).

c) Fit the bearing (3).

NOTE : The bearings are different : the right-hand bearing has a housing for the plastic bearing of the automatic height control rod.

d) Fit the outer dust excluder (4).

e) Fit the connecting rod (6) (the left-hand rod differs from the right-hand one).

Tighten the nut to 55 to 70 mΛN (5.5 to 7 m.kg).

11. Fit the anti-roll bar :

a) Adjust the position of the suspension arms : Place a jack fitted with a crossmember A (1.50 m length) and bearing under each lower end « d » of the wheel swivels).

Raise the assembly of suspension arms until the crossmember A bears against the underside of the suspension unit (at each side).

b) Offer up the anti-roll bar.

Couple the connecting rods (6) to the upper suspension levers.

Tighten the nuts to 25 to 30 mΛN (2.5 to 3 m.kg)

c) Fit the nylon shells (7) (grease the inside) in the bearings (3) of the bar.

G. 43-10

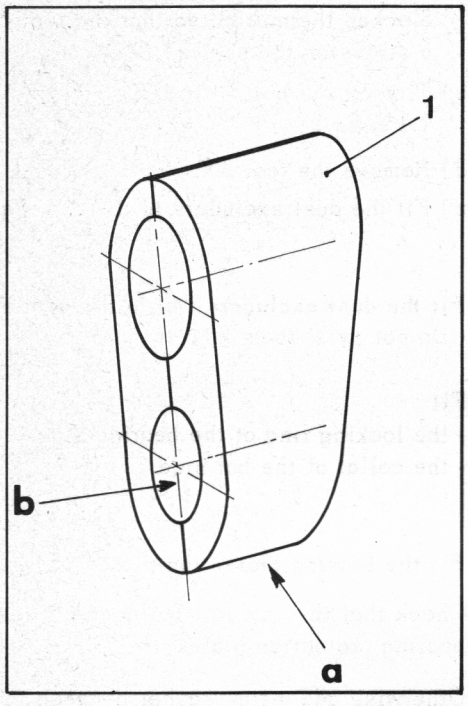

d) *On the right-hand side,* fit the plastic shells on the automatic height control rod.

CAUTION : When the shells are joined together, the assembly (1) should be wedge shaped. The automatic control rod should be in the hole « b » (smallest diameter) situated near the thinnest end « a »).

Fit the bearing (1) into its housing of the right-hand bearing of the anti-roll bar : the thinnest part « a » should be at the bottom of the housing,

NOTE : If the bearing (1) is correctly put together, *it should be possible to fit it easily into its housing.*

12. Fix the anti-roll bar :

a) Raise the bar until it is possible to fit the bolts and nuts (2) (contact washer). Engage the nuts by a few threads only (so as to hold the bar, but avoiding that the bearings touch the unit).

Check that the bearing of the automatic control rod is in its housing.

10 384

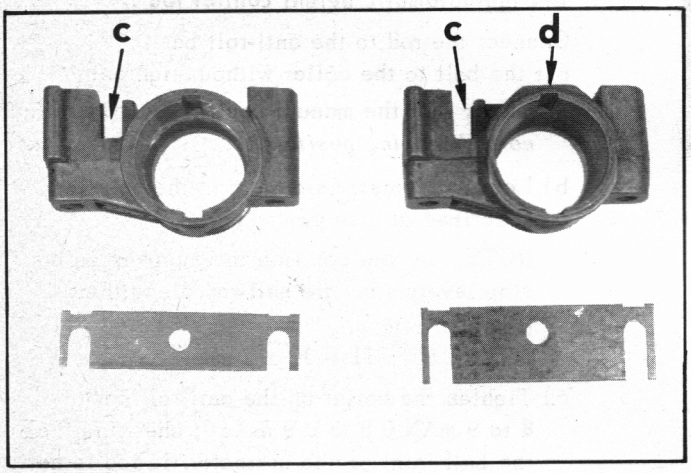

b) Continue to raise the bar by its centre until one of the bearings comes into contact with the suspension unit.

CAUTION : If the other bearing does not touch the unit, insert shims between this bearing and the unit until *it can be fixed without any stress on the bar.*

Tighten the nuts (2) to 18 to 21 mΛN (1.8 to 2.1 m.kg).

NOTE :

On vehicles produced before *1st September 1971,* the bearings have no collar (at « d ») which grip the upper part of the rubber dust excluders.

To facilitate subsequent fitting of the dust excluder, systematically interpose between each bearing and the suspension unit :

a) Two shims (GX. 20 230 01 A), if there is no shim under one or the other bearings.

b) A single shim, if one shim is already under one of the two bearings.

There is only one type of shim (thickness 1 mm).

8756

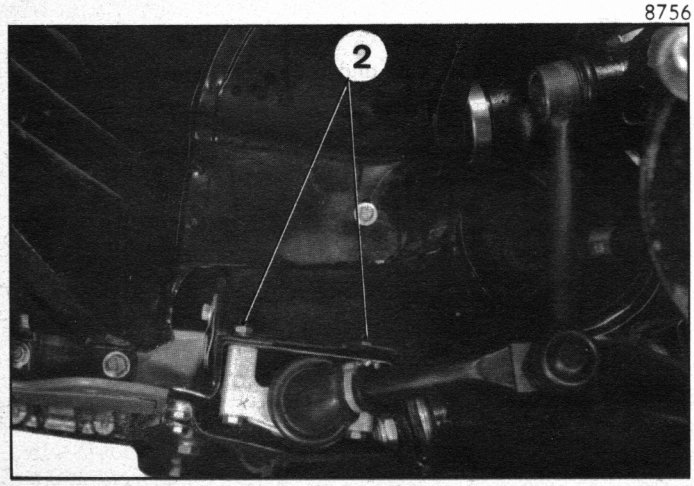

9931

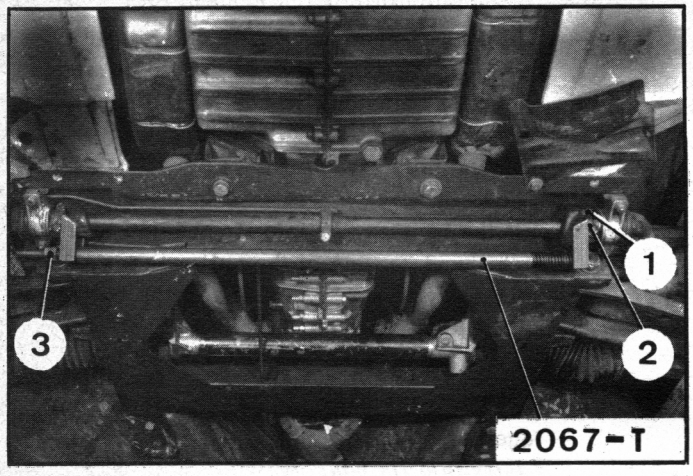

8442

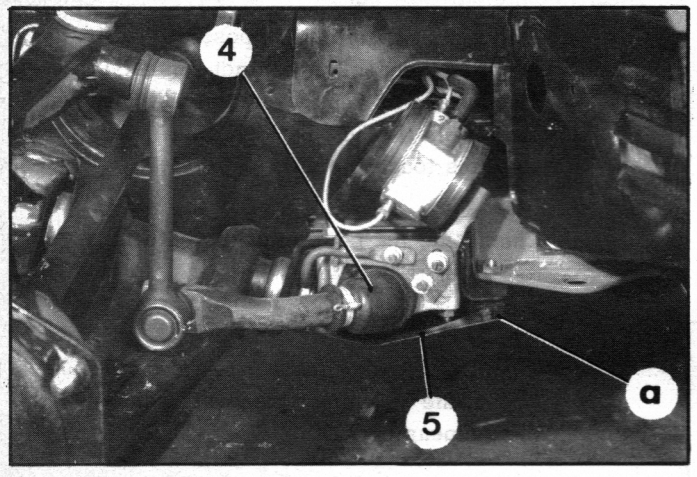

G. 43-4

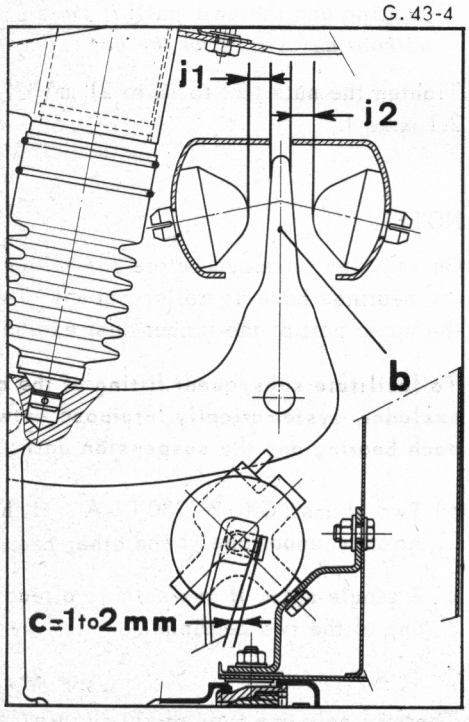

13. Prestress the bearing shells :

For this use tool 2067-T.

a) Slacken one of the bolts (1) of the collar (2).

b) Place the tool 2067-T up against the collar (2) Slacken the nut (3) so that the tool can exert a stress on the shells.

c) Tighten the bolt (1) to 10 to 11 mAN (1 to 1.1 m.kg).

d) Remove the tool 2067-T.

e) Fit the dust excluders to the bearings.

14. Fit the dust excluders (4) to the bearings
(Do not twist them).

Fit :
- the locking ring at the bearing side.
- the collar at the bar side.

15. Fit the bearing protection plates (5)

Check that the anti-roll bar does not touch the bearing protection plates.

Otherwise add a flat washer between the plate and *the nuts at « a » only.*

16. Fix the automatic height control rod :

Connect the rod to the anti-roll bar.
Fit the bolt to the collar without tightening it.

a) Check that the manual control lever is in the *normal running position.*

b) Leave the suspension arm in the position described in paragraph 11.

NOTE : In this position the suspension arm stop levers « b » are halfway along their travel :

$$J1 = J2 \pm 2 \text{ mm}$$

c) Tighten the collar on the anti-roll bar to 8 to 9 mAN 0.8 to 0.9 m.kg), checking that the ball joint on the corrector tie-rod is not clamped in the operating yoke.

$$c = 1 \text{ to } 2 \text{ mm}$$

17. Fit the corrector protective casing.

18. Remove the jack and the crosspiece.

19. Fit the front wheels.

20. Start the engine and tighten the bleed screw on the pressure regulator.

21. Lower the vehicle to the ground.

22. Check the heights and adjust if necessary.

front height = 189 ± 10 mm

rear height = 272 ± 10 mm

REMOVING AND FITTING AN AUTOMATIC FRONT HEIGHT CONTROL

8536

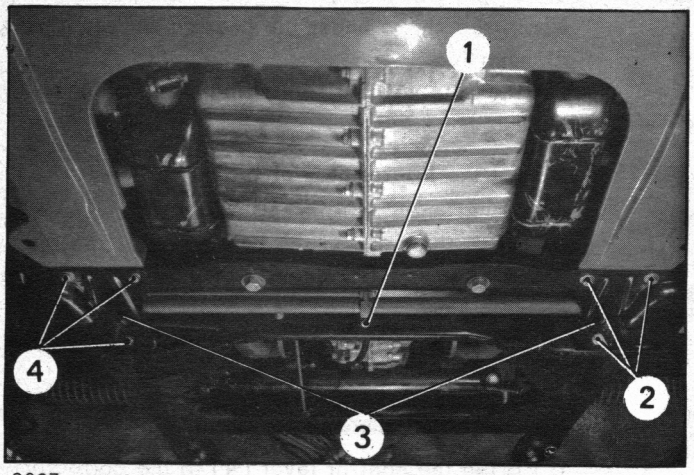

9097

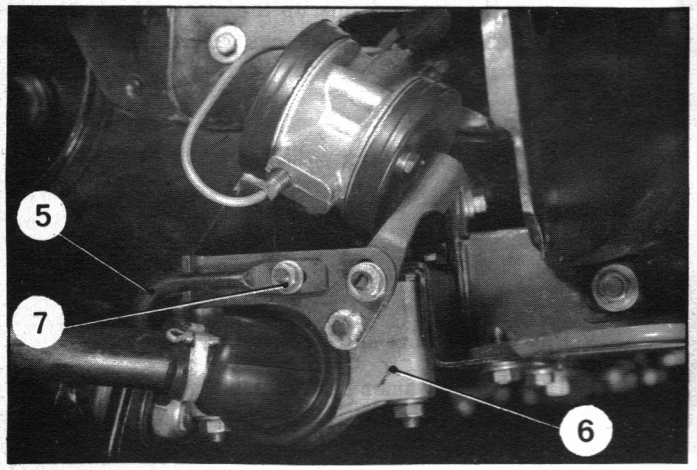

9098

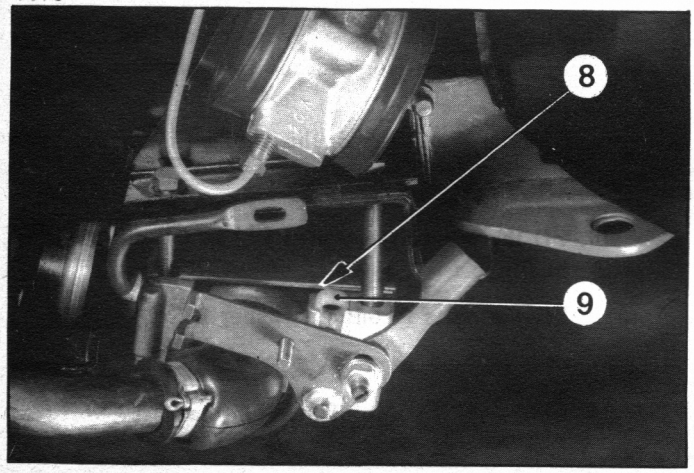

10717

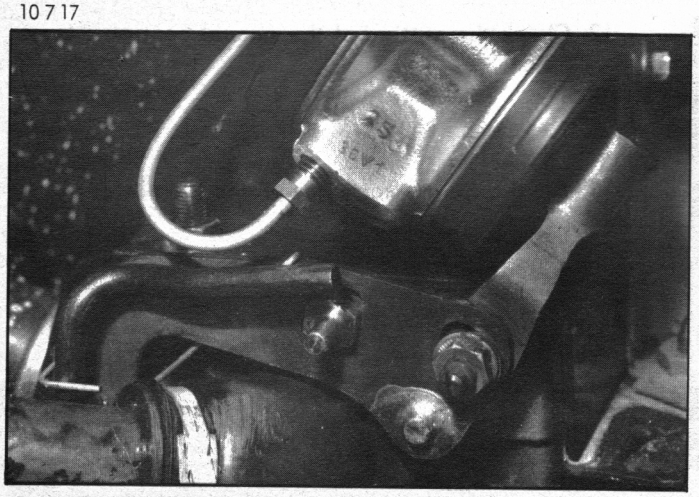

REMOVAL

1. Chock up the front of the vehicle and remove the right-hand wheel.

2. **Remove the height corrector protective plate**

3. **Remove the protective plates (3) from the anti-roll bar bearings (right and left).**

   Remove the bolts (2) and (4).

4. **Remove the automatic control system.:**

   a) Slacken the bolt on the collar (1).

   b) Place the manual control in *normal position*, remove the nut (7) and disconnect the manual control (5).

   c) Disconnect the anti-roll bar bearings (6) *(right and left)*.

   d) Remove the assembly of anti-roll bar and bearings downwards (do not lose the shims(8).

   IMPORTANT : The shims (8) may have been placed on the right or on the left, therefore they should be marked with that position.

   e) Remove the bolt (1) from the collar.

   f) Remove the automatic control system. Do not lose the bearing shells (9).

FITTING.

5. Check that the edges of the fix lever and the moving lever are in the same plane at « a ». Tighten the nut (10).

6. **Fit the automatic control system :**

   a) Offer up the system to the anti-roll-bar.

   b) Fit the bearing shells (9).

   IMPORTANT : When the two bearing shells are correctly assembled, *they should be wedge shaped (E1 > E2).*

   The narrowest end « E2 » should be at the bottom.

   The automatic control rod should be placed in the hole « b » (smallest diameter).

   c) Fit the bolt to the collar (1) *without tightening.*

9157

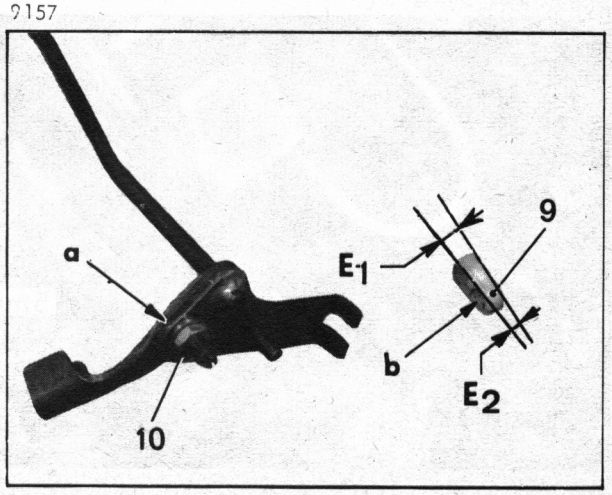

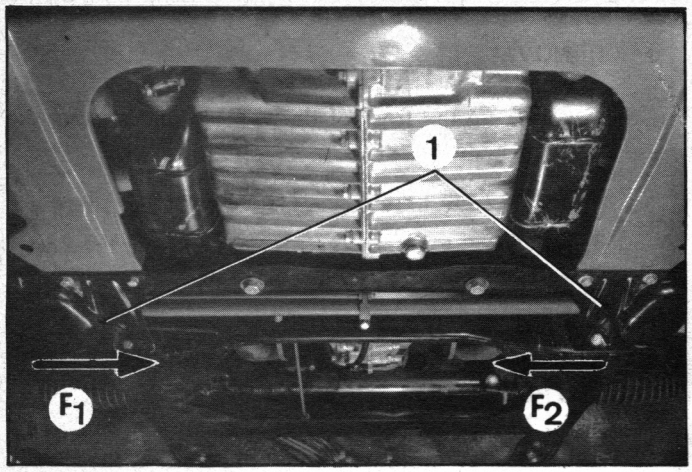

8536

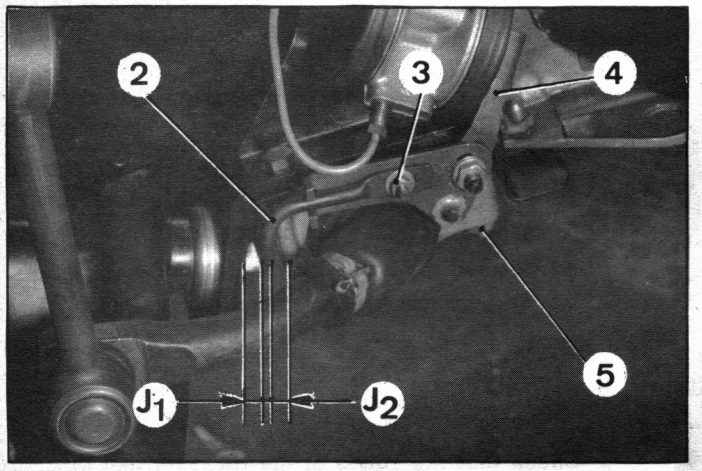

9072

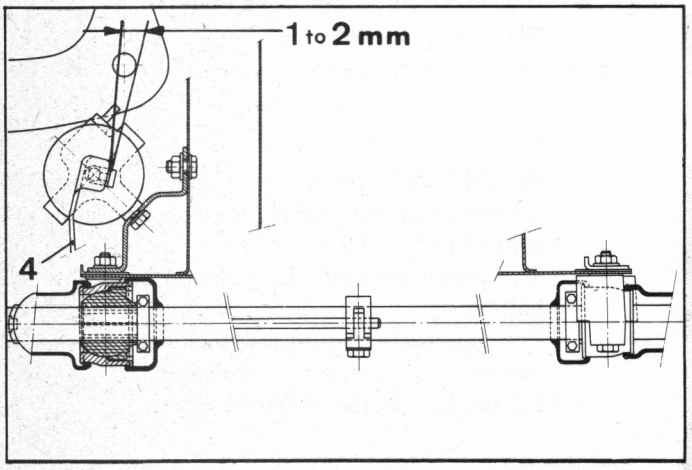

G. 43-4

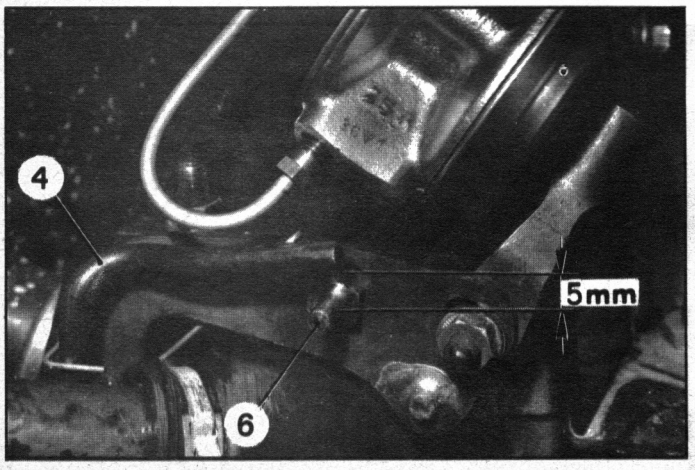

10 717

7. Fit the anti-roll bar bearings :

Place the shims under the bearing marked during dismantling.

Fit the nuts without tightening them (contact washer).

8. Adjust the lateral play of the anti-roll bar :

a) Adjust each bearing in turn as follows :

Press the hand on the bearing, exerting the force towards the center of the bar (direction of the arrow F1 or F2). While maintening this force, tighten the bolts (5) on the bearing to 18 to 21 mΛN (1.8 to 2.1 m.kg).

b) Check that there is no lateral play on the bar.

c) Bring the control lever (4) to the corrector ball joint and link up the manual control (2). Equalize the clearances (J1 = J2) *(old fitting).*

New fitting :

The lever (4) should not be in contact with the adjusting bolt (3). Leave a clearance of about 5 mm.

Tighten the nut (3) (contact washer).

9. Pre-set the automatic control system :

Using a crossmember A (1.50 m length) placed on a jack (See Op. G.434-1 page 2) lift the two semi-units, until the crossmember A comes in contact with the underside of the suspension unit.

Check that there is a clearance of 1 to 2 mm between the lever (4) and the corrector ball joint.

Tighten the collar of the automatic control system.

10. Fit the protective plates (1) to the anti-roll bar bearings :

Fit the bolts (contact washer).

11. Check the setting of the front heights.

12. Check the setting of the manual control (front part).

13. Fit the height corrector protective plate.

Fit the bolts (6).

REMOVING AND FITTING A STEERING SYSTEM.

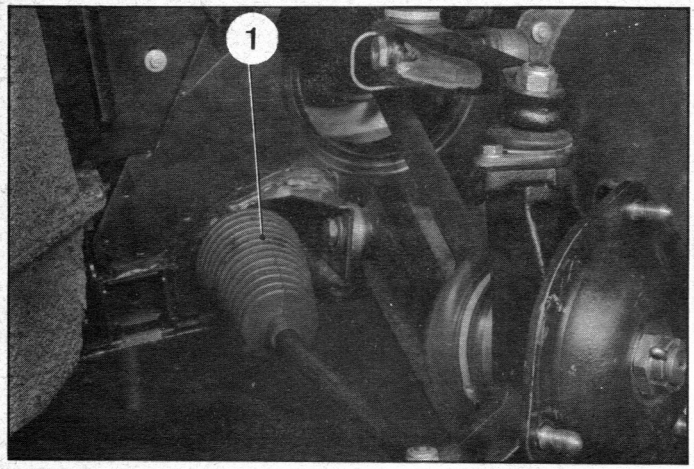

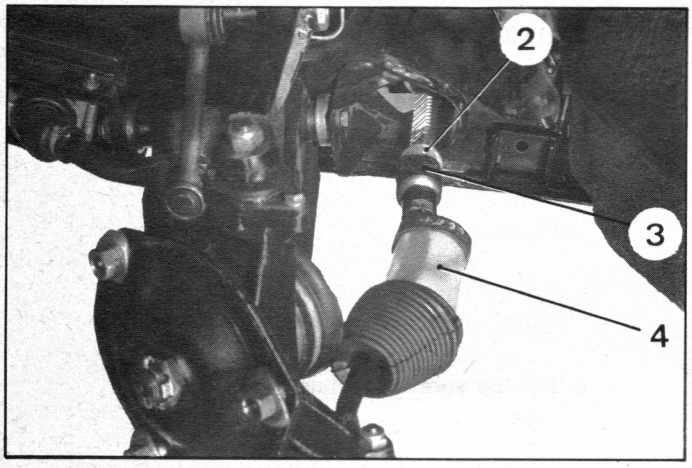

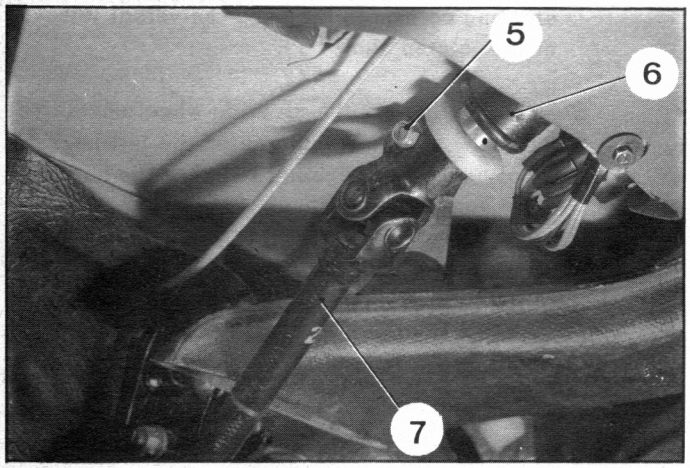

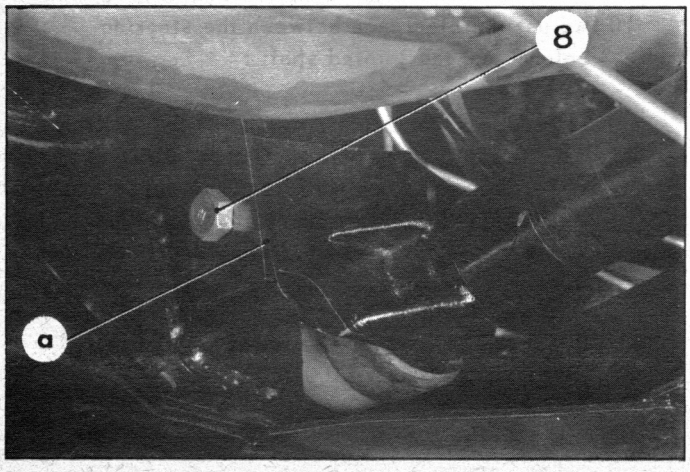

REMOVAL.

1. Place the vehicle on blocks (front wheels off the ground).

2. Remove the front wheels.

3. Move the bellows (1) out of the way.

4. **Disconnect the track rods :**
   Unlock the tabs (2).
   Unscrew the track rod ball joints (3) (16 mm key with 15° and 75° angle openings, such as FACOM N° 34). *Hold the rack still during this operation.*

5. Free the plastic sheaths (4) from the rack.

6. **Remove the steering column and the jointed shaft :**
   IMPORTANT : Since the ends of the jointed shaft are not identical, mark their positions before removing.
   Remove the nut (5) holding the upper universal joint.
   Slacken the nut holding the lower universal joint.
   Free the steering column from the support tube (6).
   Remove the jointed shaft (7).

7. **Remove the steering unit (pinion and rack assembly) :**
   Remove the bolts (8) holding the steering on the front axle unit.
   Remove the control rod (9) from the front height corrector (mark the position of the collar on the rod).
   NOTE : The height settings are not modified by removing the control rod of the height corrector.
   Free the steering box from its housing from underneath the vehicle.
   If necessary, file down each side at « a ».

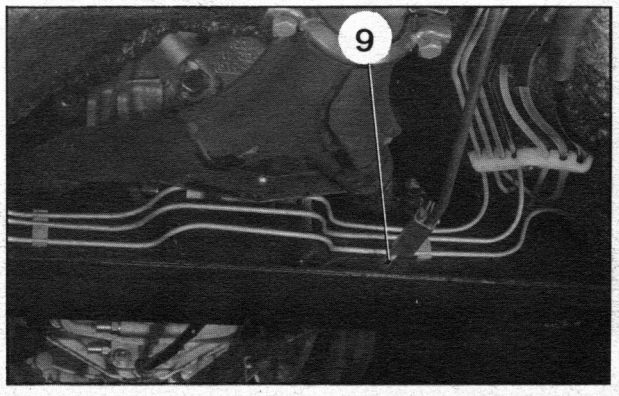

FITTING.

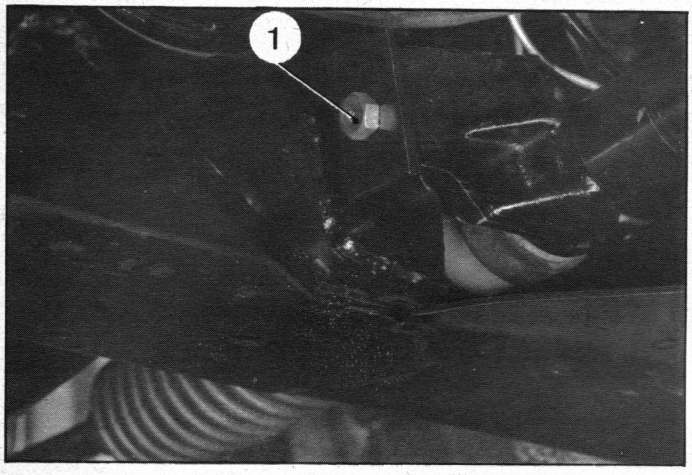

8. Fit the steering unit :

Fit the steering into its recess on the front axle unit. Tighten the bolts (1) to 36 to 40 mAN (3.6 to 4 m.kg) (bearing plate under bolt head).

9. Connect up the jointed shaft and the steering column :

CAUTION : Place the jointed shaft (6) in the position marked on removal. The ends are not identical : at the steering column end, the groove for the bolt (4) should give on the splines.

a) Engage the lower universal joint with the pinion.

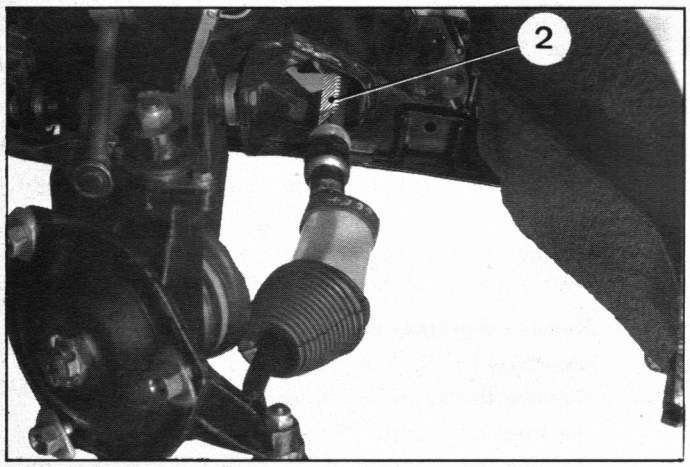

b) *Adjust the position of the rack (2) to give equal clearance at each side of the casing.*

c) Fit the steering column into the support tube (5).

d) Insert the plastic washer (3) and connect the steering column to the upper universal joint of the jointed shaft (6).

Before coupling up, the steering wheel should be orientated : the arm should be on the left-hand side, at an angle of about 30° below the horizontal (the « twenty to » position).
Fit the bolt (4) (new NYLSTOP nut whenever this bolt is removed).
Hold the jointed shaft (6) against the steering column and tighten the nut (4) to 13 to 14 mAN (1.3 to 1.4 m.kg).

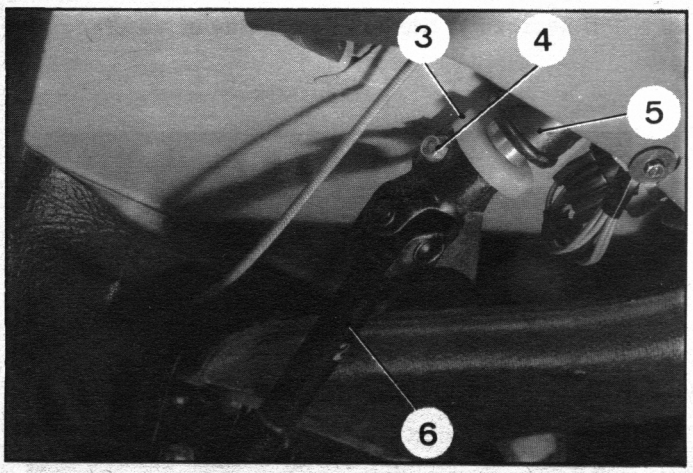

10. Adjust the clearance between the steering column and the jointed shaft :

a) Fit the lower universal joint of the shaft (6) to the pinion, to give a clearance of 1 to 1.5 mm between the washer (3) and the support tube (5). Tighten the nut to 13 to 14 mAN (1.3 to 1.4 m.kg) *(new NYLSTOP nut whenever the bolt is removed).*

b) Fit the bellows on the lower universal joint of the shaft (6).

8939

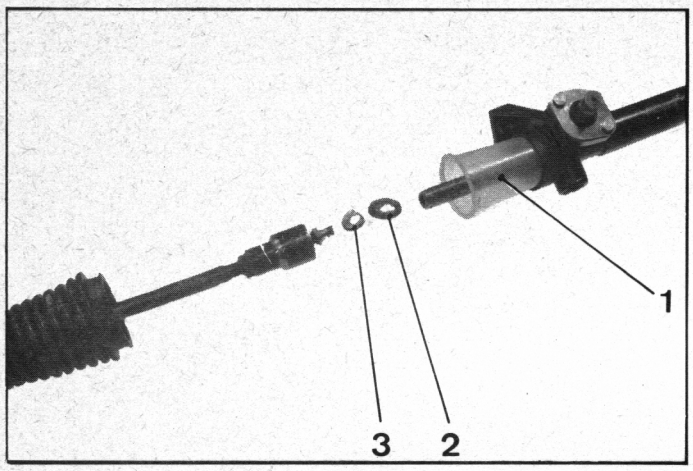

11. Connect up the track rods :

Fit the plastic sheaths (1) on the housing (elastic collars).

Screw the track rod ball joints fully home on the rack after interposing :
- the stop washer (2),
- the tab (3).

Hold the rack and tighten the ball joints to 36 to 40 mN (3.6 to 4 m.kg).

Using plier bend the tab back onto the flat of the ball joint.

8755

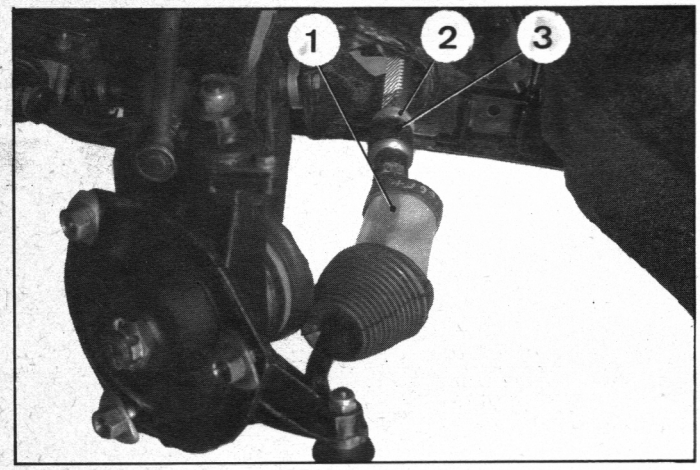

12. Connect the control rod of the front corrector :

If necessary, operate the height control to adjust the marks made when the collar (4) was removed.

8537

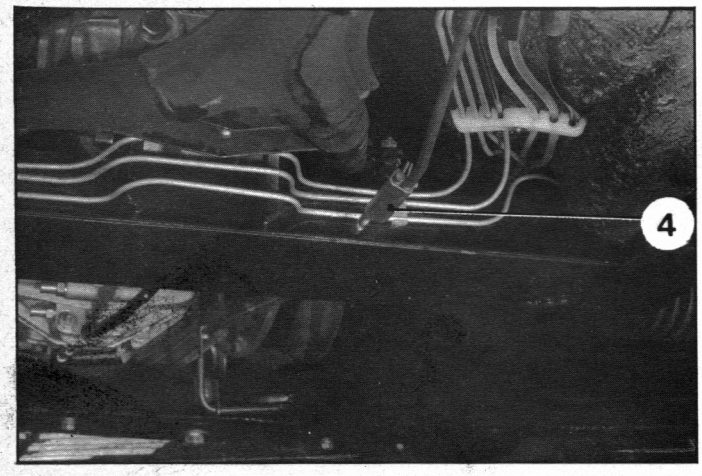

13. Fit the front wheels.

14. Lower the vehicle to the ground.

Check the toe-in of the front wheels :
0 to 2 mm with the suspension in the normal position.

8156

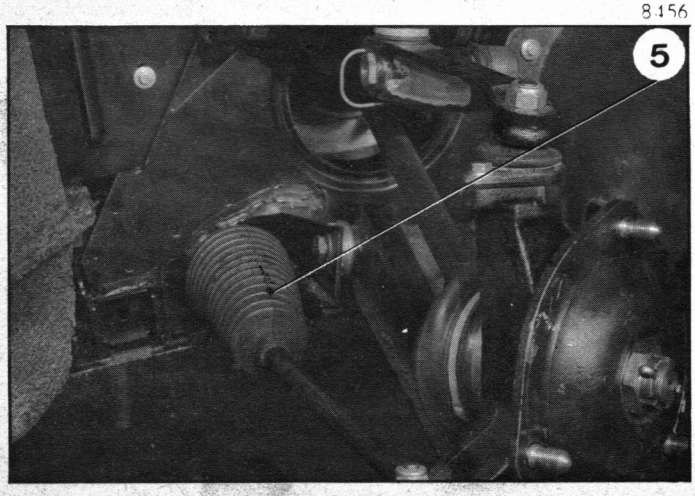

15. Place the bellows (5) over the plastic sheaths (1).

Adjust the position of the bellows (5) :

In the straight ahead position, their length should be : *155 ± 3 mm.*

I. REPLACING THE MAIN BRAKE PADS.

8 901

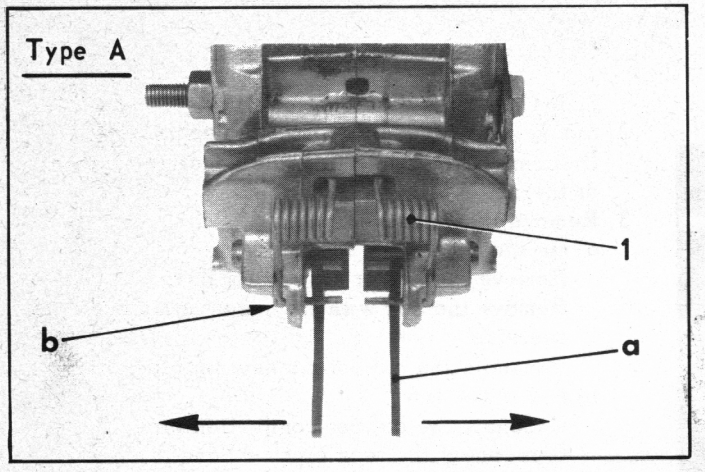

11 245

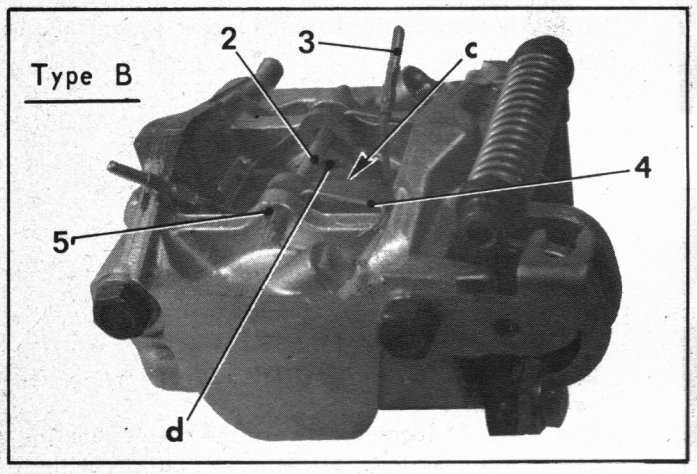

Manual 810-2

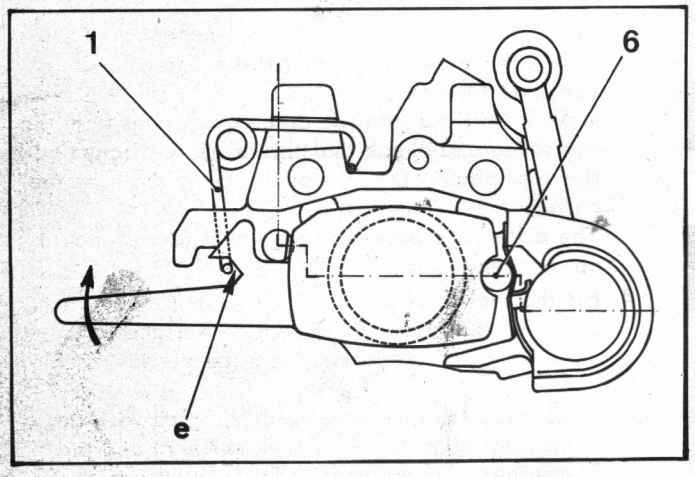

G. 45-2

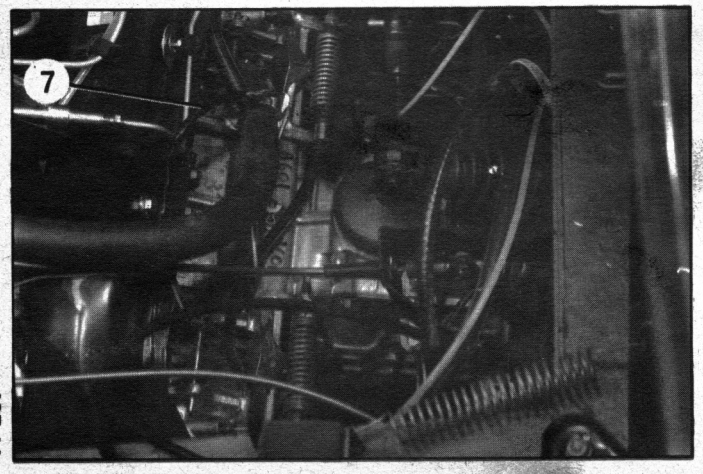

11 209

REMOVAL.

1. **Remove the heater distributor box :**
Remove the box with its hoses and place it to one side.

2. **Remove the pads :**
Vehicles fitted with old type brake calipers (type A) :
a) Push on the ends « a » of the pads with the hand to push back the pistons, as shown on the figure (arrows).
b) Disconnect the leads of the wear detector.
c) Pull on the end « b » of the pad springs : use a hook to pull the pad forward to release it.

3. **Remove the pads :**
(Vehicles fitted with new type calipers (type B)):
Push the pad at « c » with a screwdriver.
Remove the pin (5).
Push out the spindle (2).
Hold the pad by the wire (3) before this leaves the spindle,
Remove the spindle and the spring (4).
Remove the pads from above.
IMPORTANT : For even braking, the four pads should always be replaced together.

FITTING.

4. **Fit the pads :**
(Vehicles fitted with old type calipers).
Fit the pad into the caliper by pushing it as far to the rear as far as possible, so that the spigot (6) engages in the corresponding slot.
Lock the pad by raising its end so that the spring (1) engages in the notch « e ».

5. **Fit the pads :**
(Vehicles fitted with new type calipers)
a) Fit the pad at the side of the gearbox housing. Hold the pad with a hook inserted in the hole « d » of the pad.
b) Fit the spring (4).
c) Insert the spindle (2) into the brake caliper and into the upper hole of the pad after interposing the spring (4) below the spindle.
d) Repeat the same operation for the other pad.
e) Push home the spindle and fit the pin (5).
f) Connect the leads of the wear indicator (7).

6. Operate the brake pedal a few times and make sure that the pedal travel remains normal.

7. Fit the heater distributor box.

II. REMOVING AND FITTING A BRAKE CALIPER.

8460

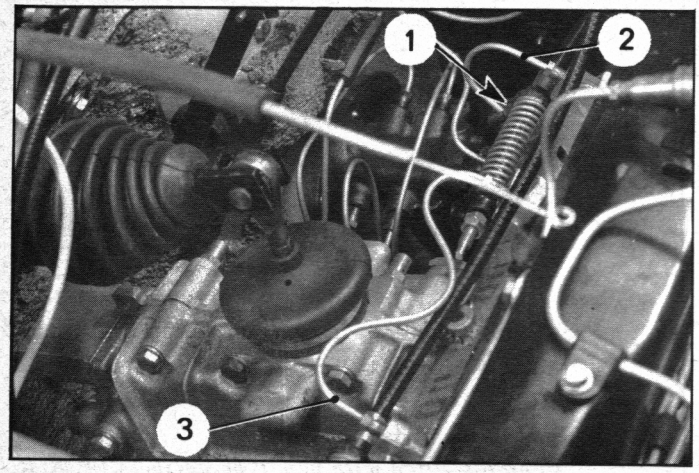

8447

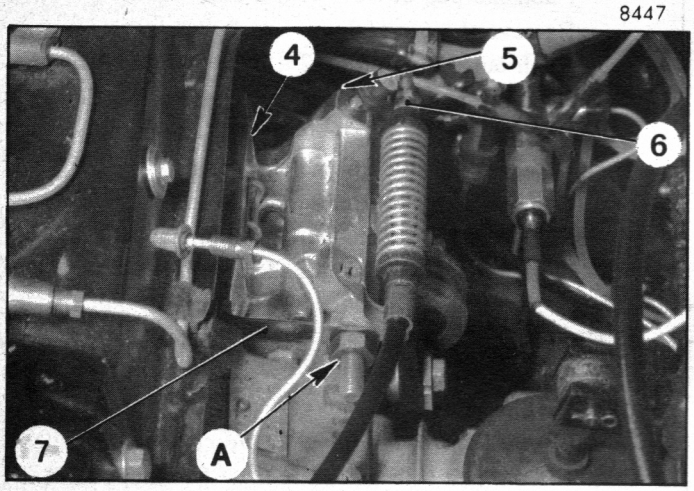

8513

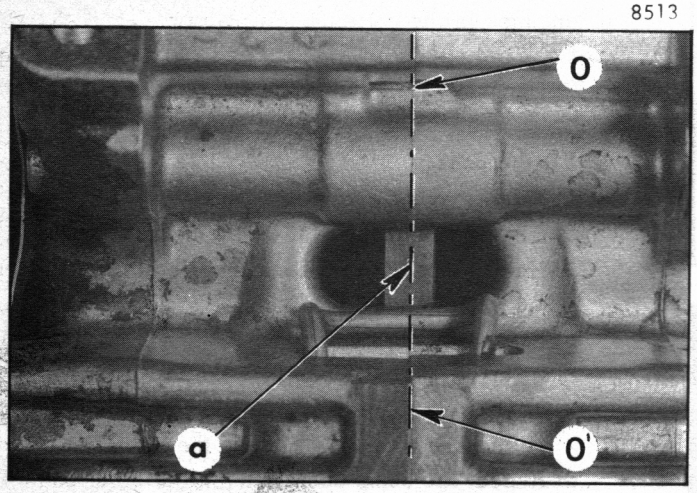

REMOVAL.

1. Place the manual height control *on high position.*
2. Slacken the pressure regulator bleed screw.
   Disconnect the cable from the negative terminal of the battery.
3. **Remove the caliper :**
   a) *On the right-hand side :*
      Remove the heater distributor box.
      Remove the box with its hoses and place it to one side.
      Uncouple the caliper connection pipe (3).
   b) *Left-hand side :*
      Uncouple the caliper connection pipe (3).
      Disconnect the feed pipe (2) and release it from the bracket (1).
   c) Partly slacken the bolts (4) and (5) which hold the caliper.
      Remove the rear bolt (5). Swing the caliper.
      Replace the bolt (5). Fit a nut A (10 × 1,50) so as to retain the two halves of the caliper.
   d) Disconnect the emergency brake cable.
      Remove the locknut and the nut (6).
   e) Remove the front mounting bolt (4) and remove the caliper.

FITTING.

IMPORTANT : *Vehicles fitted with old type brake calipers only.*
The shim (7) located between the caliper and the gearbox is used for positioning the caliper with respect to the brake disk.
When exchanging a caliper, it is necessary to check this position. After fitting, carry out this check as follows :
Make a mark « a » on the disk equidistant from the two faces and check that this mark is aligned with the seal plane « O - O' » of the two halves of the caliper.
The difference between these two planes should not exceed 0.5 mm.

4. **Fit the brake caliper :**
   a) Check the state of the bearing surface of the calipers on the gearbox. Scrape off any burrs.
   b) Offer up the complete caliper, fitted with the original shim (7) *(old type caliper)* and the emergency brake pads. (The two halves of the caliper being assembled and held together by the bolt (5) and the nut A which were used during dismantling).
   c) Fit the front mounting bolt (4). Do not tighten it fully (flat washer on the right-hand side).
   d) Remove the nut A, swing the caliper and tighten the bolt (5) (flat washer on the right-hand side).
      Check that the shim (7) is in place *(old type caliper).*
      Tighten the bolts (4) and (5) to 45 to 50 mAN (4.5 to 5 m.kg) *on old type calipers and* 60 mAN (6 m.kg) *on new type calipers.*
5. **Fit the main brake pads.**
   (See corresponding operation).

8460

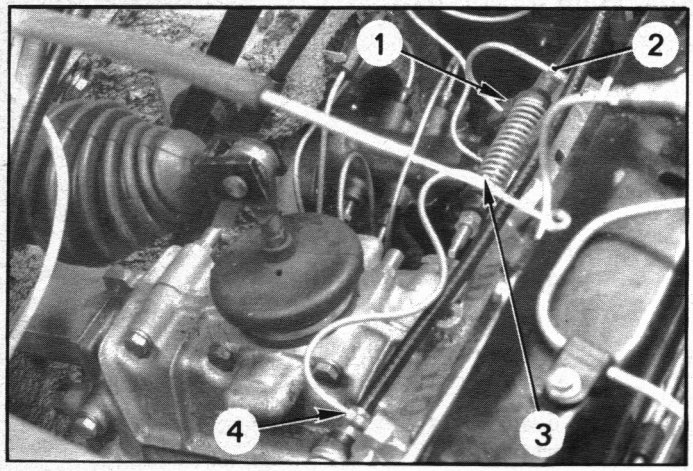

8366

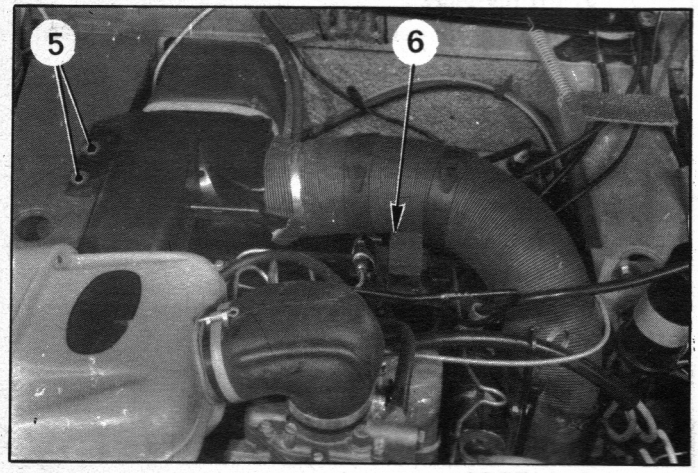

6. Adjust the clearance at the emergency brake pads.

7. Connect up and adjust the emergency brake cable.

8. Connect up the feed pipes :

a) *Right-hand side :*
Fit the union (4).
(Replace the sleeve-seal)

b) *Left-hand side :*
Fit the unions (2) and (3).
(Replace the sleeve-seals).
Insert the pipe in the bracket (1).
Tighten the unions to 8 to 9 mAN (0.8 to 0.9 m.kg).

9. Bleed the front brakes .
Connect the cable to the negative terminal of the battery.

10. Fit the heater distributor box :
Fit the bolts (5) (contact washer).
Tighten the bolt (6).

III. REMOVING AND FITTING A BRAKE DISC

8608

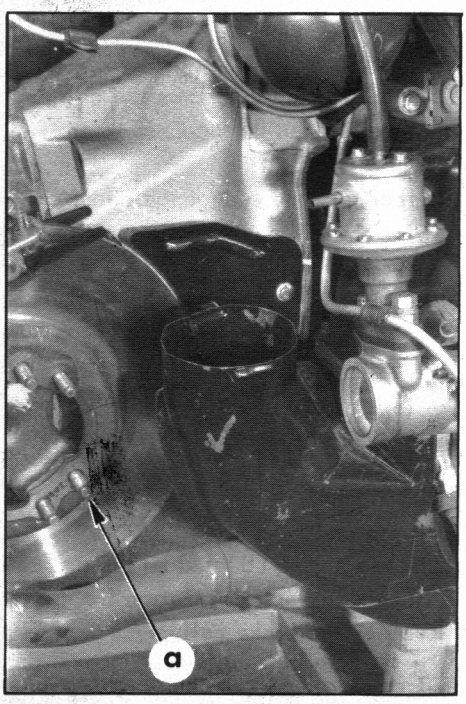

REMOVAL.

1. Place the front of the vehicle on blocks :
Place the height control *on the high position.*
Chock up the front of the vehicle with *the wheels off the ground* (behind the wheel arch).

2. Release the pressure in the circuits :
a) Slacken the pressure regulator bleed screw place the height control *in the normal position.*
b) Wait until the rear suspension has stabilized and place the control *to the high position :* the rear suspension should settle completely.

3. Remove the brake caliper :
Do not disconnect the emergency brake cable.

4. Disconnect the drive shaft :
Remove :
- the wheel,
- the nuts and bolts (key 2418-T).

5. Remove the disc :
Remove the fixing studs.
Remove the disc from above.

FITTING.

6. Fit the disc :
Offer up the brake disc and fit the studs on the differential shaft (shouldered part « a » to the outside).

7. Connect up the drive shaft :
Tighten the nuts to 50 mAN (5 m.kg)

8. Fit the brake caliper.

9. Lower the vehicle to the ground.

IV. REPLACING THE EMERGENCY BRAKE PADS

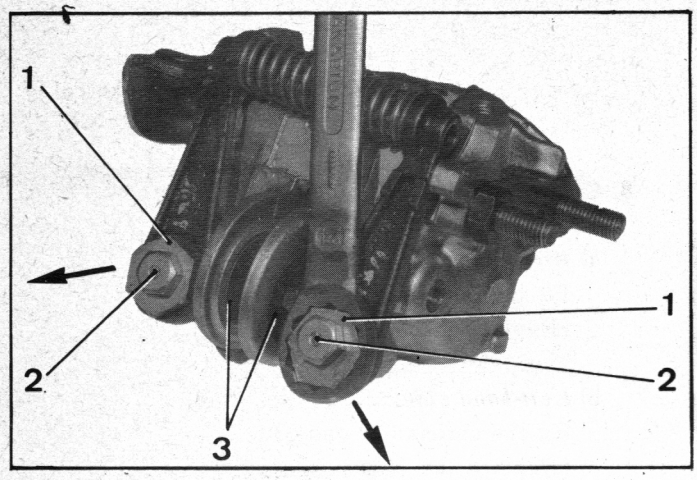

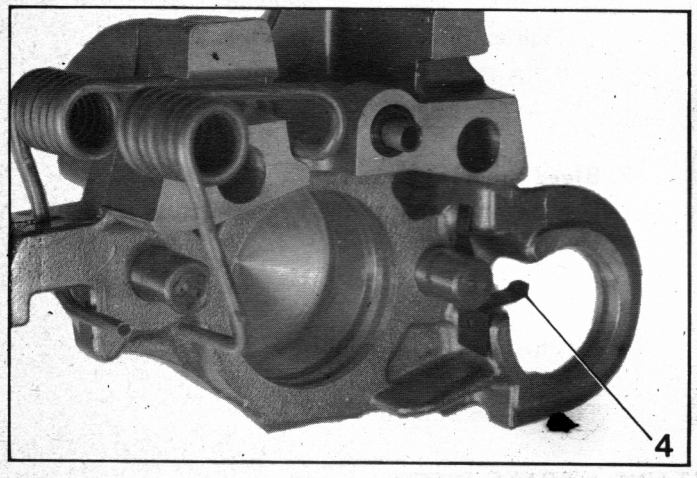

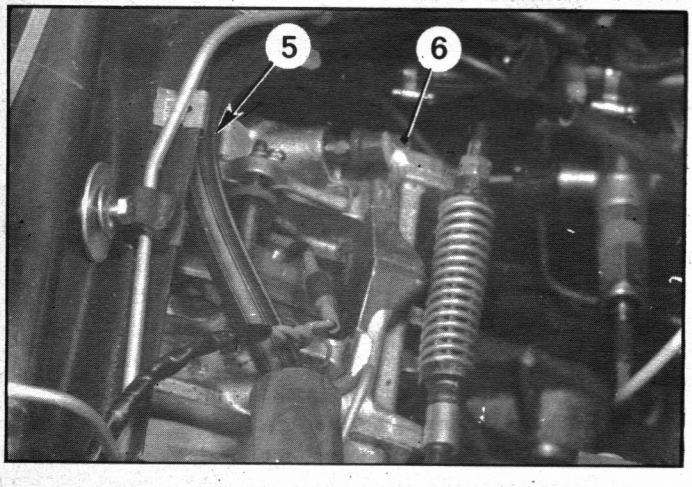

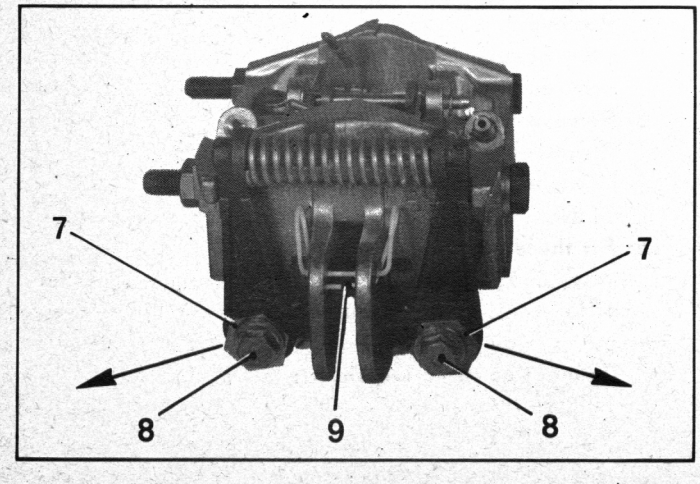

A. VEHICLES FITTED WITH OLD TYPE CALIPERS.

REMOVAL.

1. **Remove the brake caliper :**
2. Remove the pads (3) and slacken the bolts (2) on the eccentrics.

NOTE : For even braking, the four pads must always be replaced together.

FITTING.

3. **Fit the pads :**
   a) Turn the eccentrics (1) to position which gives the maximum clearance at the pads (direction of the arrows).
   b) Fit the pads (3).
   c) Check that the anti-noise springs (4) are properly positioned.
4. **Fit the brake caliper.**
5. **Adjust the pad clearance.**
6. **Adjust the emergency brake cables.**

B. VEHICLES FITTED WITH NEW TYPE CALIPERS.

7. **Remove the pads :**
   Remove the heater distributor box.
   Disconnect the pipe from the caliper.
   Partly slacken the bolt (5).
   Remove the bolt (6).
   Disconnect the emergency brake cable.
   Swing the caliper towards the front of the vehicle.
   Slacken the bolts (8) and turn the eccentrics (7) to the position which gives maximum clearance at the pads (direction of the arrows).
   Hold the spring (9) and release the pads.
   Proceed in the same way for the other brake caliper.

FITTING.

8. **Fit the pad :**
   Lift the spring (9) and fit the pad to its support.
   (Repeat the same operation for the other pads).
9. **Replace the brake caliper.**
   Fit the bolt (6).
   Tighten the bolts (5) and (6) to 60 mN (6 m.kg).
10. **Adjust the pad clearance.**
11. **Connect and adjust the emergency brake cables.**
12. Connect up the caliper pipe.
13. **Bleed the front brakes.**
14. Fit the heater distributor box.

I. REMOVING AND FITTING A WINDSCREEN WIPER MOTOR.

8366

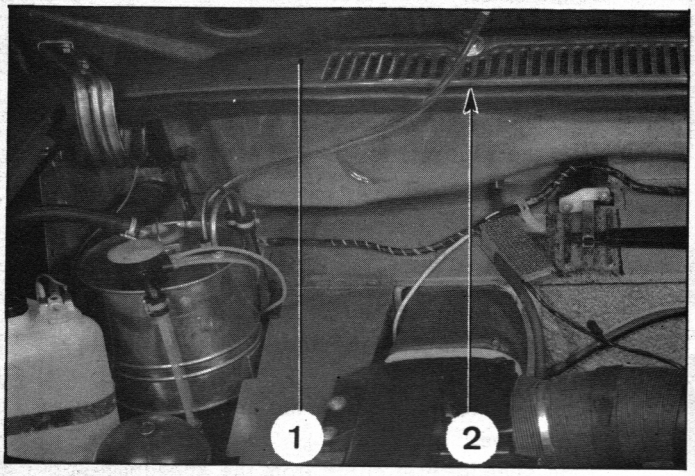

REMOVAL.

1. Disconnect the chassis cable from the negative terminal of the battery.
2. Remove the bonnet .
3. Remove the plate (1) from the ventilation intake after removing its seal (.2).
4. Remove the nut (7) holding the crank and release this from the spindle of the windscreen wiper motor.
5. Remove the three bolts (6) holding the motor to its support plate (4).
6. Remove the four bolts (5) holding the support plate to the chassis.
7. Disconnect :
   - the windscreen wiper motor harness from the vehicle harness,
   - the motor earthing lead from the chassis.
8. Remove the support plate, then the motor and its electrical connections.

8874

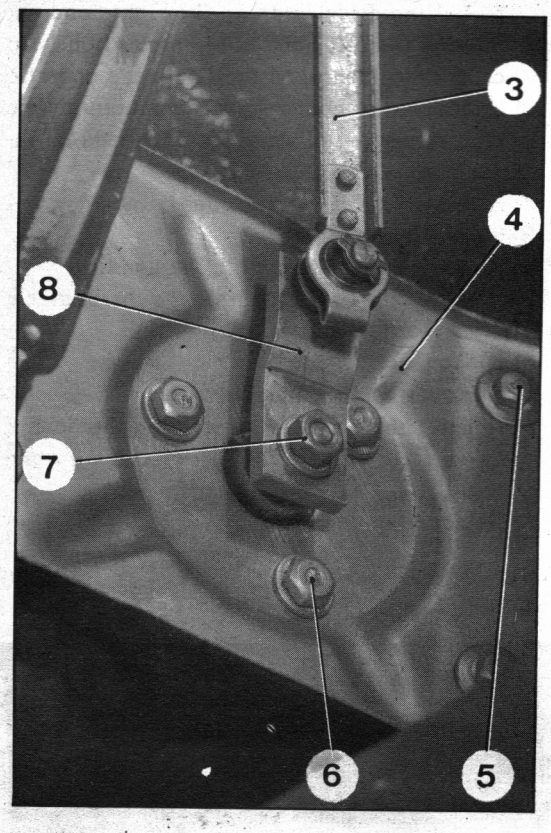

FITTING.

9. Fit the motor and its electrical connections into the ventilation air intake.
10. Fit the support plate (4) on the motor. Tighten the three bolts (6) (toothed washer) to 3.5 to 4 mΛN (0.35 to 0.4 m.kg).
11. Fit the assembly of plate and motor to the chassis.
    Tighten the four bolts (5) (toothed washer) to 5 mΛN (0.5 m.kg).
12. Connect :
    - the motor electrical harness to the vehicule harness,
    - the motor earthing lead to the chassis (bolt holding the bonnet hinge).
13. IMPORTANT : *Before fitting the crank (8) to the motor, make sure that the latter is in the « automatic stop » position.*
    To do this :
    - Connect up the battery (negative terminal).
    - Switch on the ignition for about 5 seconds and then switch it off again.
    - Disconnect the battery (negative terminal).
14. *Fit the crank (8) on the motor spindle and in alignment with the connecting rod (3).*
    Tighten the nut (7) to 4.5 to 5 mΛN (0.45 to 0.5 m.kg) (toothed washer).
15. Fit the ventilation air intake plate and its seal.
16. Fit the bonnet.
17. Connect the cable to the negative terminal of the battery.
18. Check the operation of the windscreen wiper.

8780

II. REMOVING AND FITTING A WINDSCREEN WIPER MECHANISM.

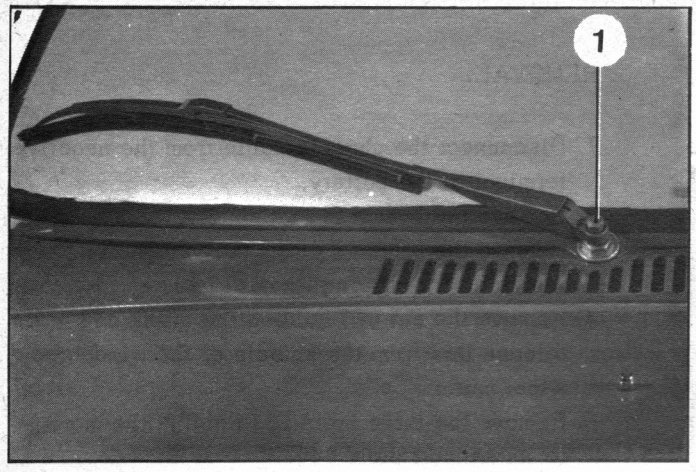

8447

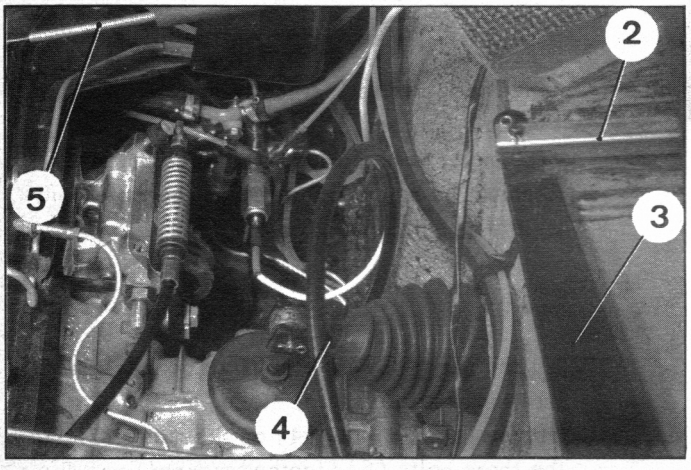

8868

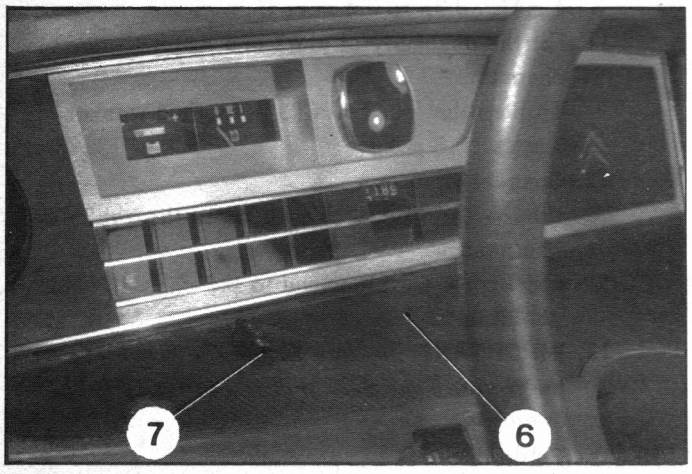

8869



REMOVAL.

1. Disconnect the cable from the negative terminal of the battery.
2. Remove the bonnet lid.
3. Remove the ventilation air intake plate and its seal.
4. Remove the nut holding the crank and free this from the windscreen wiper motor spindle.
5. Remove the nuts (1) holding the wiper blade holders and free from their tapered splined shafts.
6. Disconnect :
   - the choke cable from the carburettor,
   - the operating cable (5) from the heater flap,
   - the emergency brake handle (2) from the operating lever (3),
   - the gear lever (4) from the selector fork operating lever,
   - the speedometer cable from the speedometer.
7. **Remove the instrument panel :**
   a) Remove the cover (6), push it forward in order to remove it from the back.
   Disconnect the leads from the switch or switches (7) (according to model).
   b) Remove the two bolts (8) and (9).
   Remove the panel from the dashboard : begin by pulling downwards on the right-hand and then on the left-hand side (press lightly at « a » on the dashboard, to facilitate the operation).
   c) Uncouple the connector or connectors (according to model) of the different leads on the panel.
   d) Remove the instrument panel.
8. **Remove the dashboard :**
   a) Remove the emergency brake handle.
   b) Remove the knobs controlling the heater and de-mister (pull them out).
   c) Disconnect all the electrical plugs.
   d) Remove the steering wheel.
   e) Remove the seven bolts holding the dashboard : at « b », « c », « d », « e », « f » and « g » and the bolt (10).
   f) Remove the dashboard.

8871

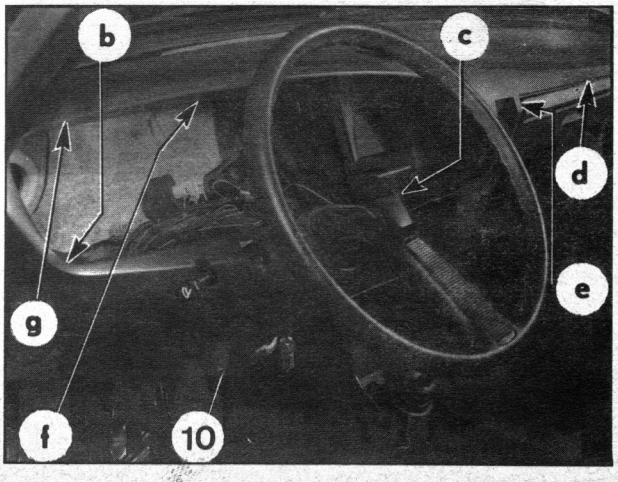

8881

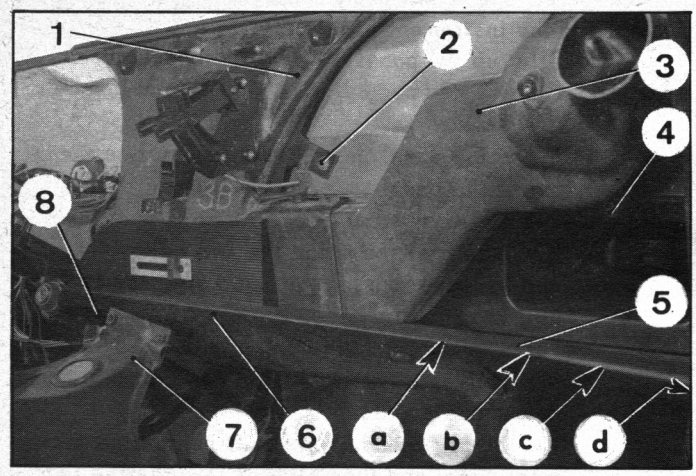

8882

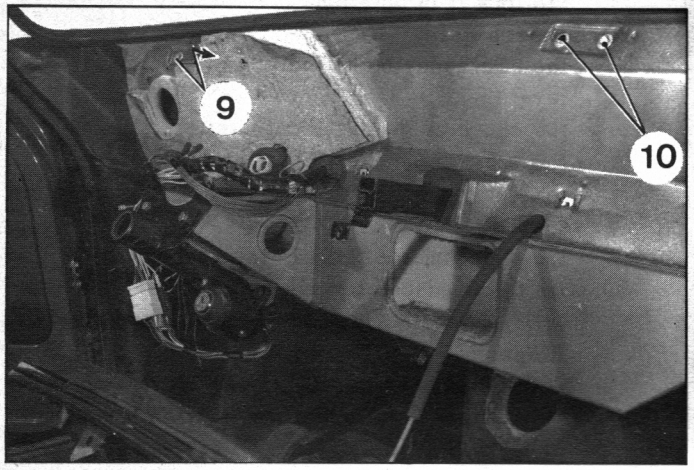

8886

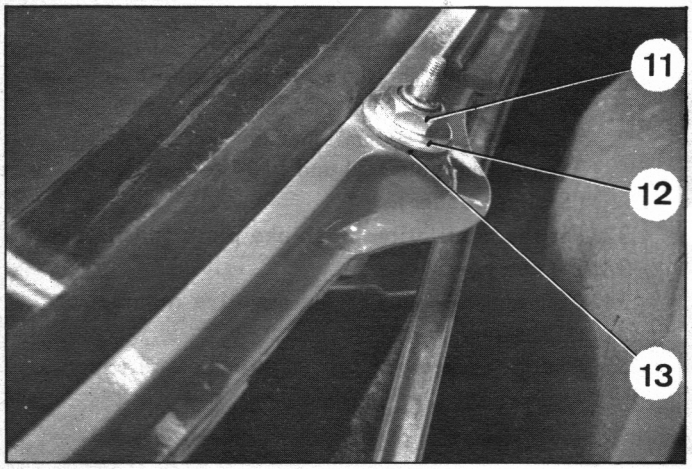

8871

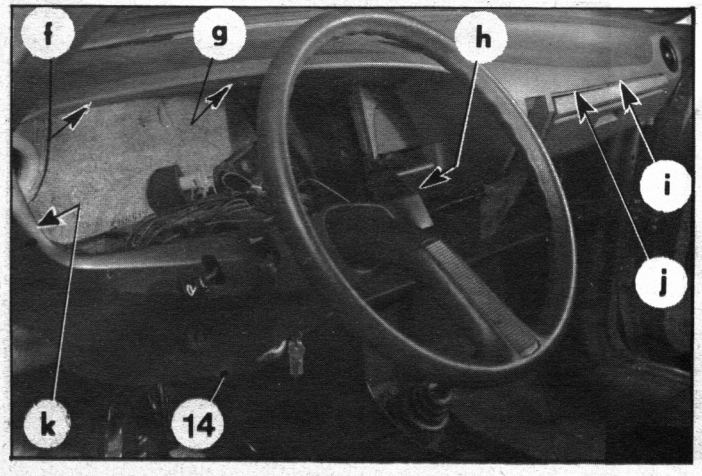

9. Remove the shelf (5) by removing the six bolts : at «a», «b», «c», «d» and the bolts (6) and (8).

10. Remove the two bolts (4) and free the duct (3).

11. Remove the bolts holding the console (7) and pull it a little way to the rear.

12. Remove the four bolts (2) holding the pipe (1) and free it.

13. Remove the bolts (9) and (10) holding the windscreen wiper bearings on the dashboard.

14. Remove the nut (11) from each spindle, the cap washer (12) and the seal (13).

15. Remove the mechanism from the dashboard.

FITTING.

16. Fit the mechanism together with the crank of the windscreen wiper motor.

17. With the bearings placed on the dashboard plate : to each spindle fit the seal (13), the cap washer (12) and the nut (11). Temporarily tighten this by hand.

18. Fit the bolts (9) and (10) holding the bearings to the dashboard, without tightening (toothed washer).

19. Tighten the nuts (11) on the cap washer to 9 mAN (0.9 m.kg).

20. Tighten the bolts (9) and (10) of the bearings to 3 to 3,5 mAN (0.3 tp 0.35 m.kg).

21. Fit the pipe (1). Tighten the four bolts (2) (toothed washer).

22. Fit the duct (3). Tighten the two bolts (4) (toothed washer).

23. Fit the shelf (5). Tighten the six bolts at « a », « b », « c », « d », (6) and (8) (toothed washer).

24. Fit the console and fix it in position.

25. Fit the dashboard.
Fit and tighten the bolts at « f », « g », « h », « i », « j », « k » and (14).
Connect the electrical harness to the different switches.

26. Fit the steering wheel.

27. Fit the emergency brake handle and the control knobs for the heater and de-mister.

8869

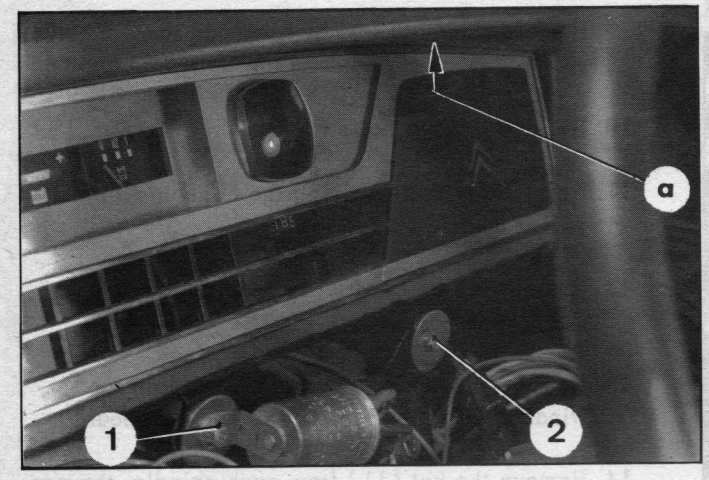

8868

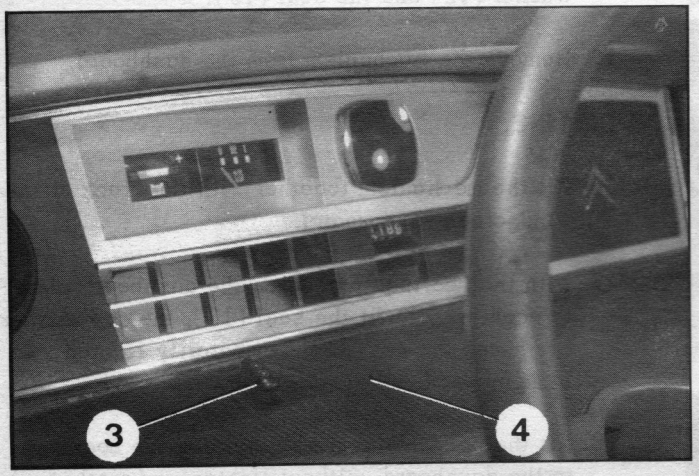

8447

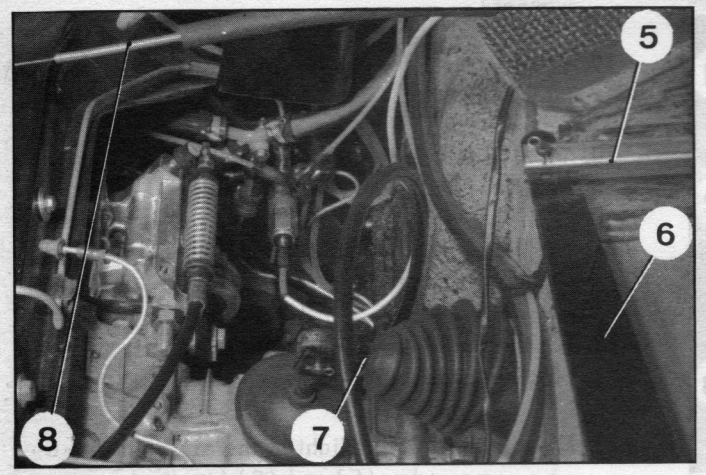

8780

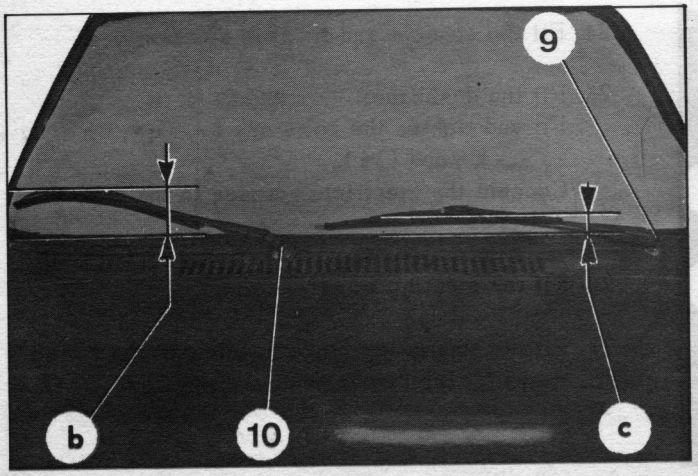

28. Fit the instrument panel :

a) Offer up the panel, plug in the connector or connectors (according to model) and connect the leads.

b) Place the panel in its housing : incline the top of the panel towards the front of the vehicle to insert it under the cowl at « a ». Fix it in position using the two bolts (1) and (2), interposing the bracket of the flasher unit (see figure).

c) Offer up the fairing (4). Connect the leads to the switch or switches (3) (according to model or options fitted).

Fit the fairing (4) : insert it behind the instrument panel and then slide it towards the rear to lock it in position.

29. Connect up :

- the emergency brake rod (5) to the operating lever (6),
- the choke cable to the carburettor,
- the operating cable (8) to the heater flap,
- the gear lever (7) to the selector fork operating lever,
- the speedometer cable to the speedometer.

30. With the windscreen wiper motor *in the « automatic stop » position* (see page 1, same operation paragraph 13) :

Fit the crank (12) to the spindle of the windscreen wiper motor and *align it with the connecting rod (13).*

Tighten the nut (11) to 4.5 to 5 mAN (0.45 to 0.5 m.kg) (toothed washer).

31. Fit the windscreen wiper blades.

Position them as shown in the figure below so that :

b = 60 ± 10 mm and c = 35 ± 10 mm

Tighten the nuts (9) and (10) to 9 mAN (0.9 m.kg) (Spring washer).

32. Fit the ventilation air intake plate and its seal.

33. Fit the bonnet.

34. Connect the cable to the negative terminal of the battery.

35. Check the operation of the windscreen wipers.

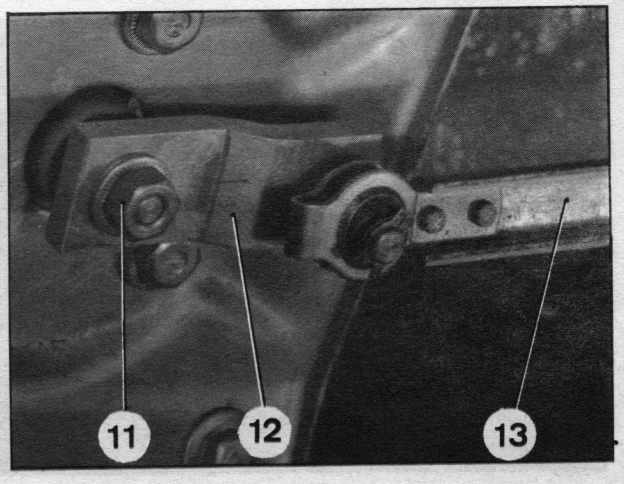

8874

LIST OF SPECIAL TOOLS MENTIONED IN THE FIRST SECTION OF THE MANUAL 810-2

DESCRIPTION	NUMBER Methods - Repairs	REFERENCE of tool on sale
Crossmember fot lifting vehicle		2510-T
(2) ENGINE		
Valve spring compressor		1652-T or 1652-T bis
Key for filter cartridge		1683-T
Tool for fitting seal to distributor drive		1695-T
Tool for fitting a camshaft seal		1697-T
Key for removing and fitting an engine with converter		1790-T
Stand for engine on work bench		2508-T
Sling for hoisting engine-geabox assembly		2511-T
Ring for fitting piston rings Engine 1015 cc		3010-T
Ring for fitting piston rings Engine 1220 cc		4007-T
Segment for adjusting centrifugal advance		3093-T
Key for tightening cylinder head nuts (for nuts 12 mm across flats)		3094-T
Key for tightening cylinder head nuts (for nuts 13 mm across flats)		4006-T.D + 4006-T.F
Key for carburettor (11 mm across flats)		3096-T
Tool for holding a camshaft wheel	MR. 630-11/26	
Extension series K. 210 (3/4" square) modified for removing fan nut	MR. 630-17/1	
Rocker shaft extractor	MR. 630-25/8	
Mandrel for fitting gudgeon pin		1699-T
Rod for setting distributor	MR. 630-51/70	
Union for checking engine oil pressure		3099-T
Shim for fitting oil pump drive		4001-T
Tool for holding flywheel		3064-T.E
(3) (4) CLUTCH - GEARBOX		
Key for nuts holding gearbox to engine		1791-T
Bracket for holding converter on gearbox		3186-T
Mandrel for extracting a pin or control lever from selector fork shafts	MR. 630-31/84 a	
Mandrel for fitting a pin or control lever to selector fork shafts	MR. 630-31/84 b	
Mandrel for centering clutch disc	MR. 630-31/85	
Shims for clutch drive contacts : - « minimum » shim : thickness 1.4 mm - « maximum » shim : diameter 1.5 mm		3112-T
(5) DRIVE SHAFTS		
14 mm ball joint key (length = 700 mm)		2418-T
Tool for fitting bellows	MR. 630-64/55	

LIST OF SPECIAL TOOLS MENTIONED IN THE FIRST SECTION OF THE MANUAL 810-2

DESCRIPTION	NUMBER Methods - Repairs	REFERENCE of tool on sale
(7) (8) FRONT AND REAR SUSPENSION UNITS		
Ball joint extractor		1892-T
Front hub extractor		1893-T
Unit for adjusting stress on front anti-roll bar bearings		2067-T
Rear suspension arm extractor with nut		2068-T
Unit for fitting rear suspension arms		2069-T
Extractor for rear suspension arm bearings		2070-T
Mandrel and sockets for fitting rear suspension arm bearings		2071-T
Key for rear hub plug		3304-T
Key for front hub bearing nut		3320-T
Assembly for removing and fitting the front or rear hub nut		3321-T
Mandrel for fitting the front or rear hub bearing	MR. 630-31/96	
Mandrel for fitting the front hub seal	MR. 630-31/97	
Tool for holding the front or rear hub	MR. 630-64/40	
Tool for removing and fitting the support tube of the rear suspension arm		2072-T
(11) BRAKES		
Key for adjusting parking brakes		2115-T

MR 630_11/26

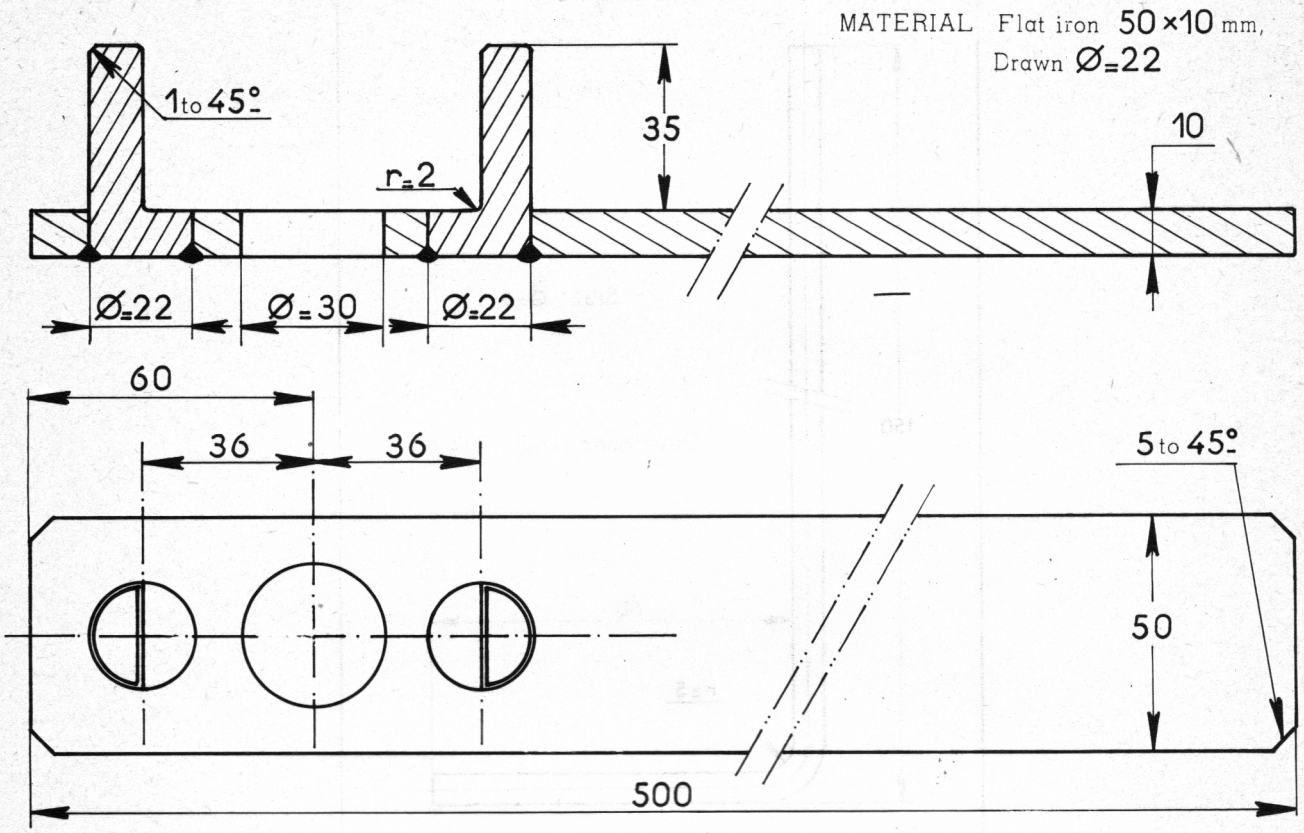

MR 630-17/1

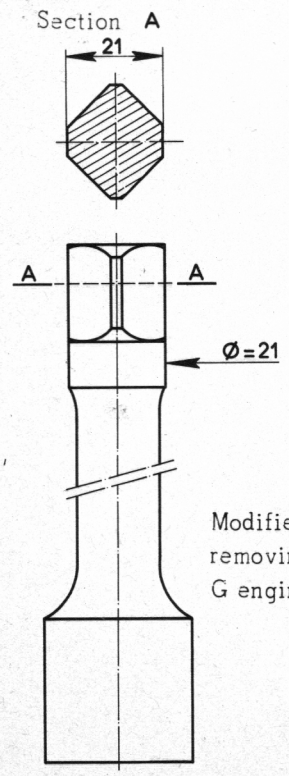

3/4" extension, truck series FACOM K 210

Modified for removing fan from G engine

MR 630_25/8

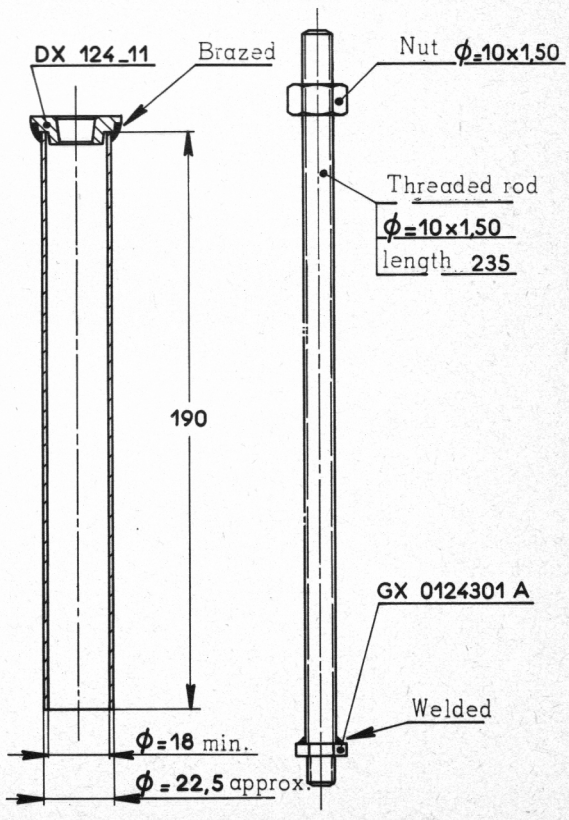

MR 630-51/70

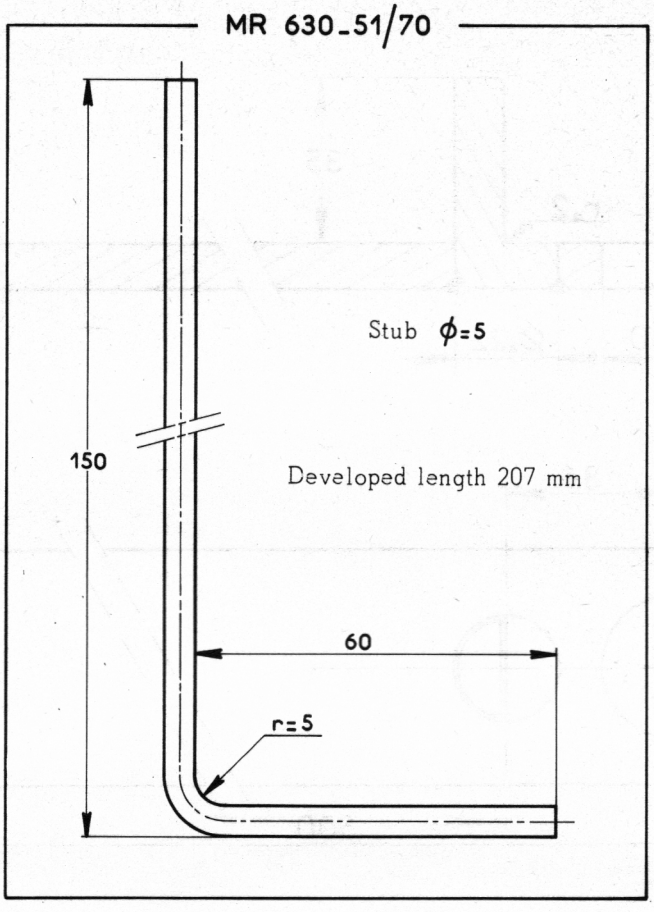

MR 630_31/84

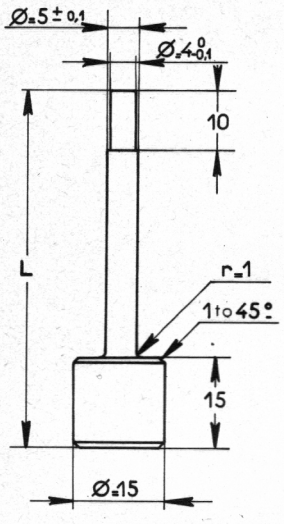

1 Part. A; length 59 mm
1 Part B; length 37.5 mm

MATERIAL : semi-hard treated steel

MR 630_31/85

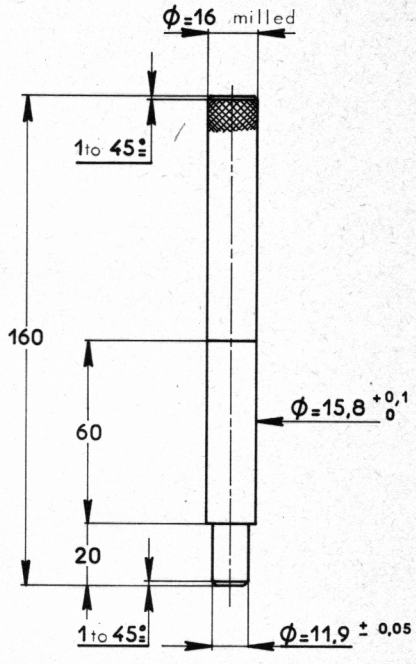

Semi-hard steel

MR 630 - 64/55

MATERIAL

Tube 15 × 21 mm

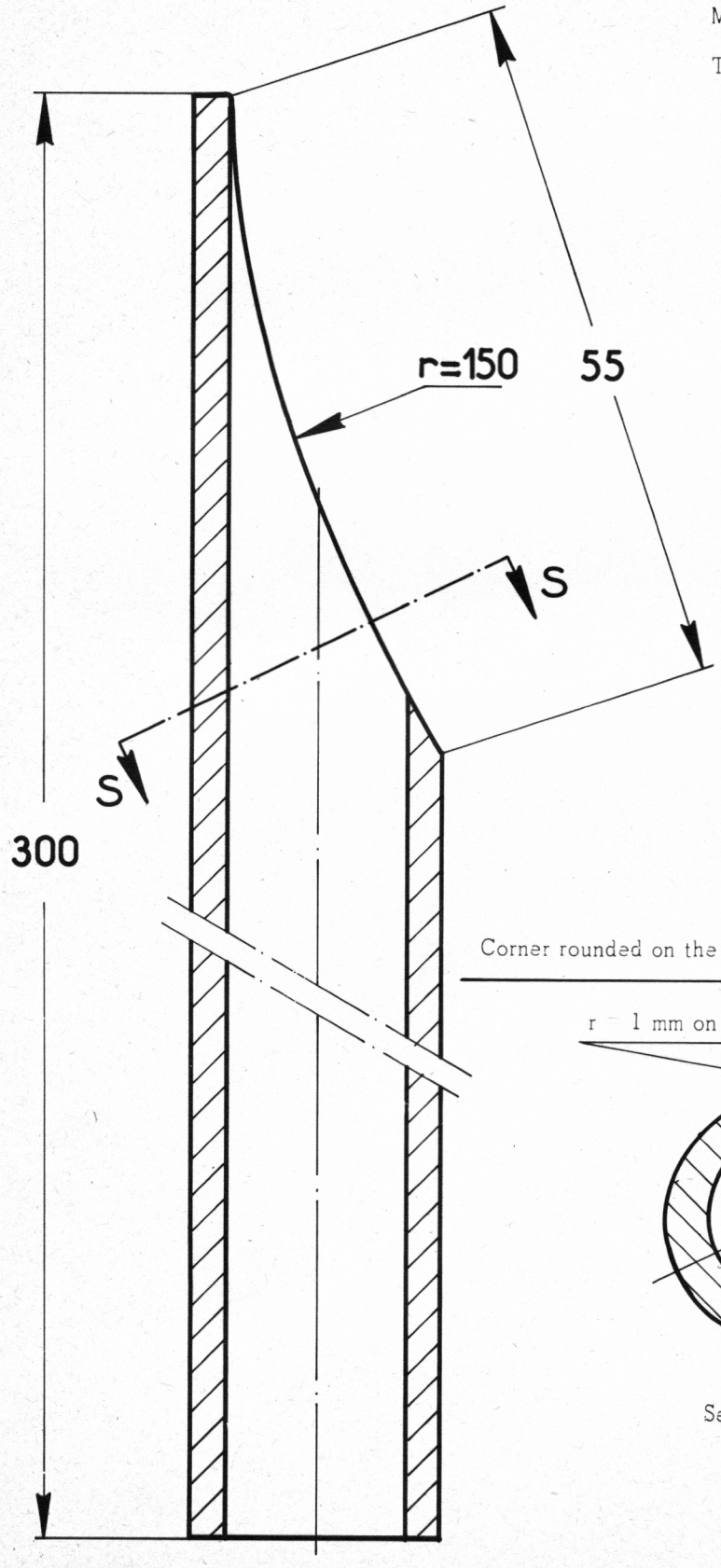

Corner rounded on the circumference

r = 1 mm on the circumference

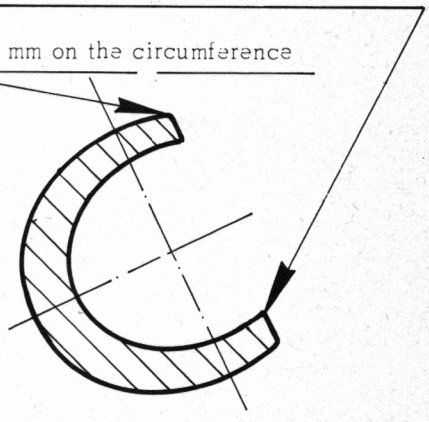

Section . S

MR 630_31/96

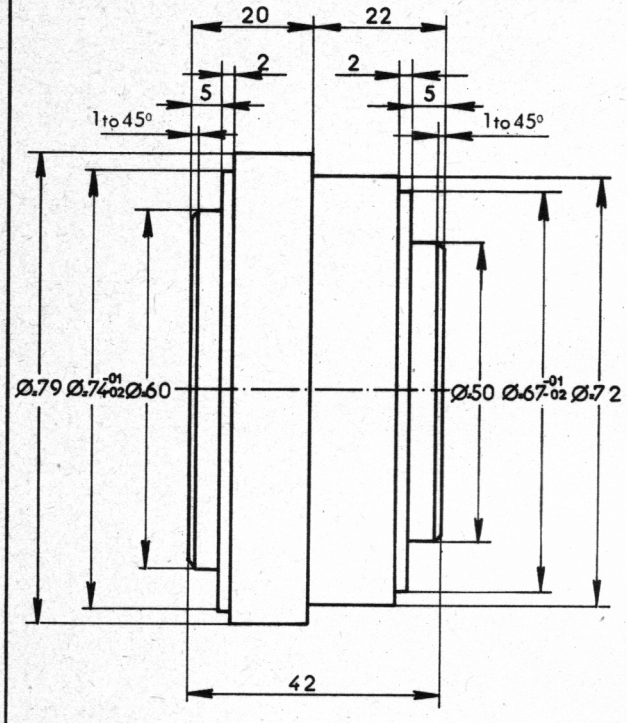

MATERIAL : semi-hard steel

MR 630_31/97

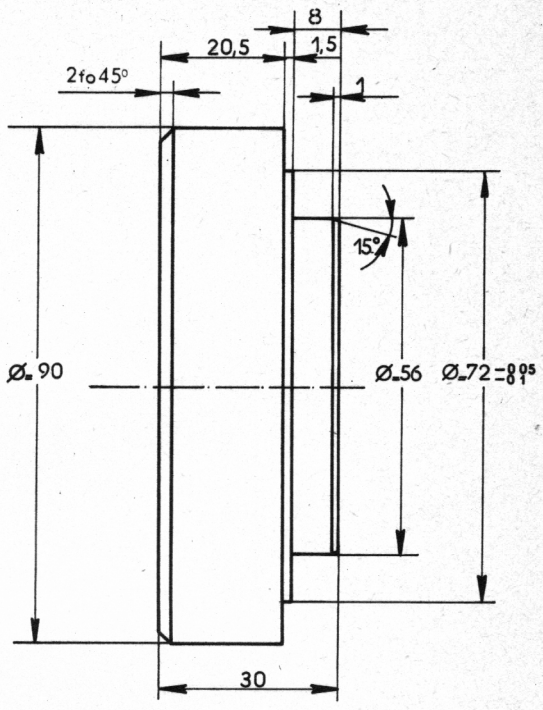

MATERIAL : semi-hard steel

Manual 810-2

MR.630_64/40

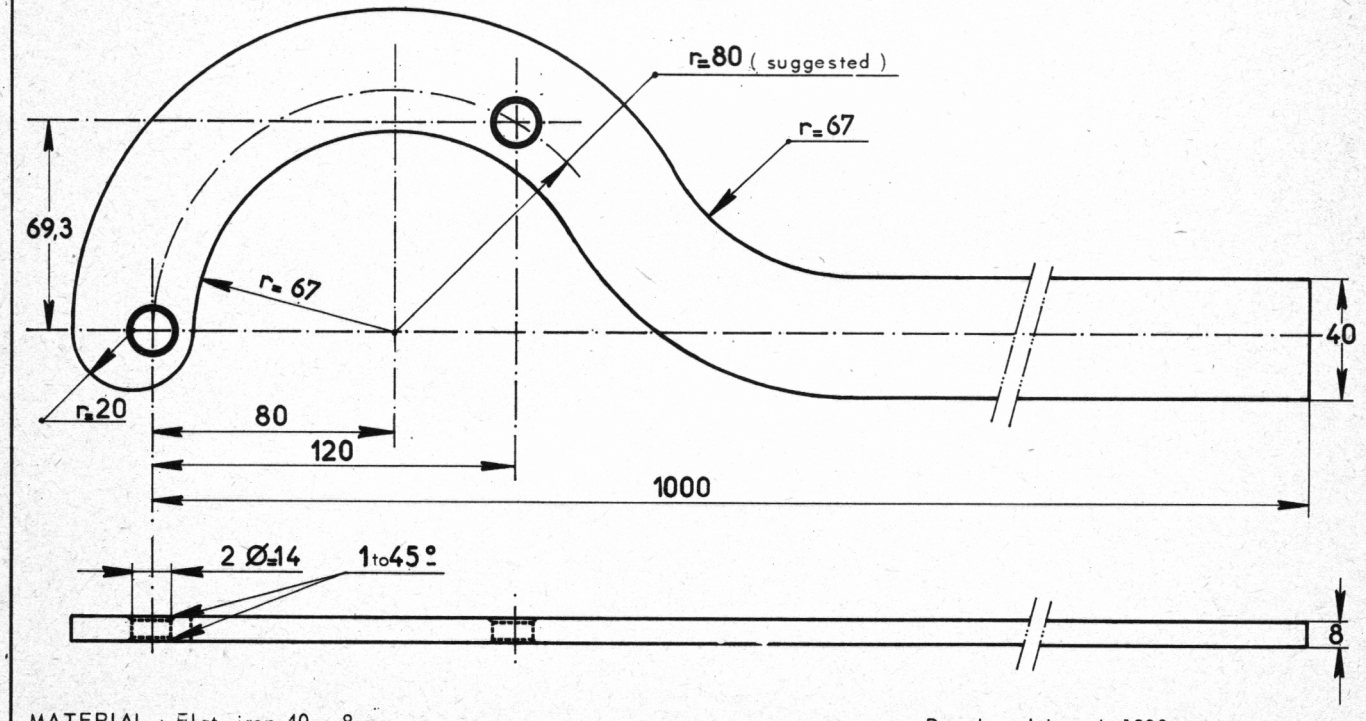

MATERIAL : Flat iron 40 . 8 mm

Developed length 1200 mm

MANUAL N° 810-2

THIRD SECTION

ELECTRICAL SYSTEM

Manual 810-2

I. STARTER MOTOR TYPE DUCELLIER 6208 A or 6208 B

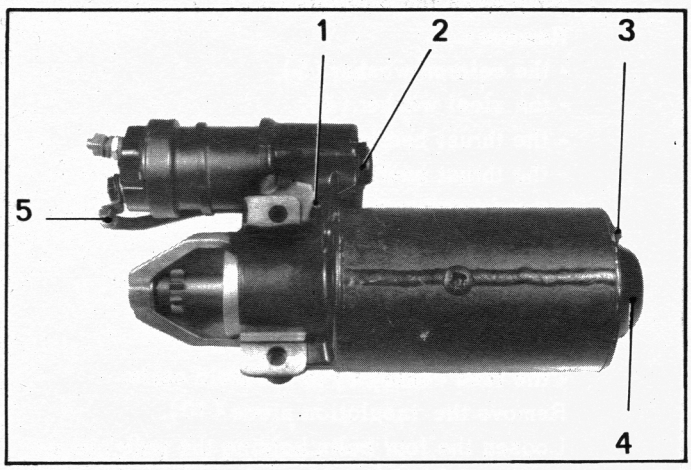

DISMANTLING.

1. Disconnect the field coils supply lead (5).

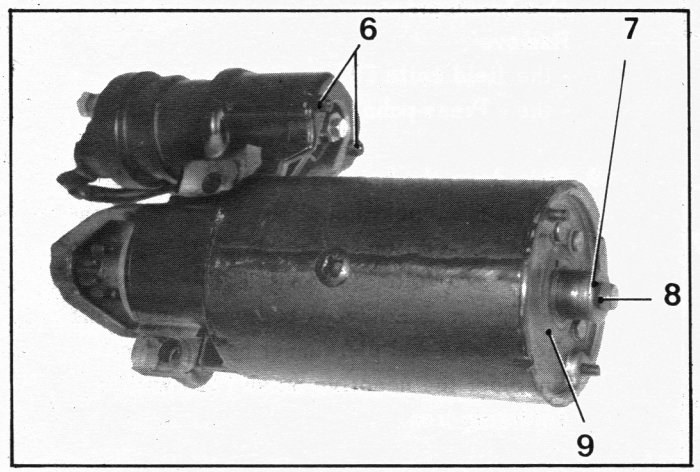

2. Remove :
   - the nuts (3) holding the bearing end plate,
   - the rear cover (4),
   - the plastic plug (2).

3. Drive out the fork hingepin (1).

4. Hold the drive gear and remove the bolt (8) and its steel washer (7).

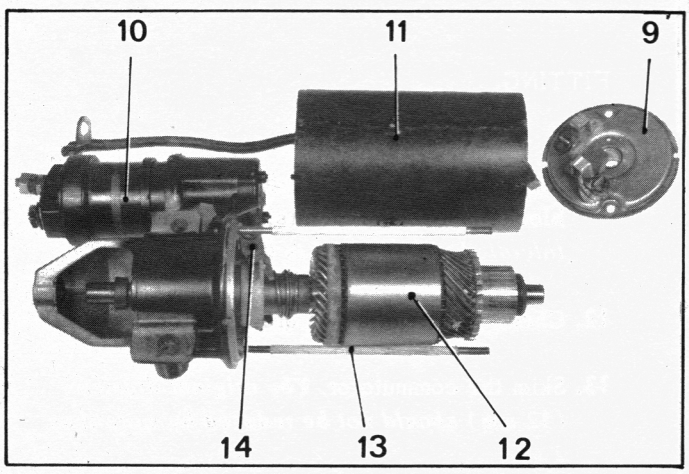

5. Remove :
   - the bearing end plate (9) and release the positive brush and its guide.
   - the yoke (11) from the two assembly rods (13),
   - the solenoid (10) after removing the two nuts (6),
   - the fork (14),
   - the armature (12).

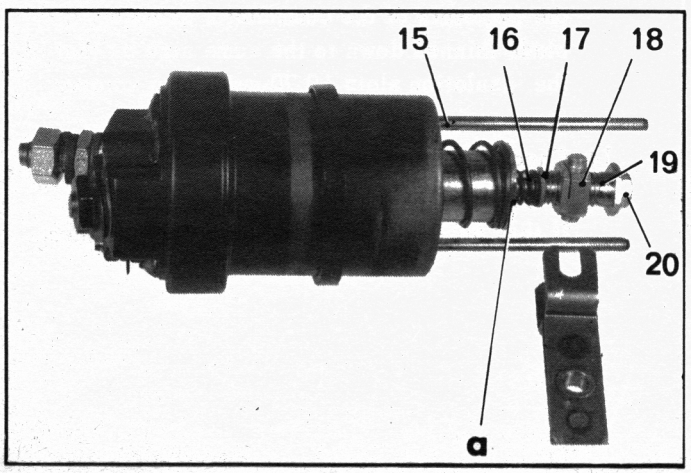

6. **Strip down the solenoid :**

   Remove the two rods (15), the bolt (20) while holding the solenoid core by the two flats « a ».

   Remove :
   - the spring (16) and its washer (17),
   - the adjustment sleeve (19) and its nut (18).

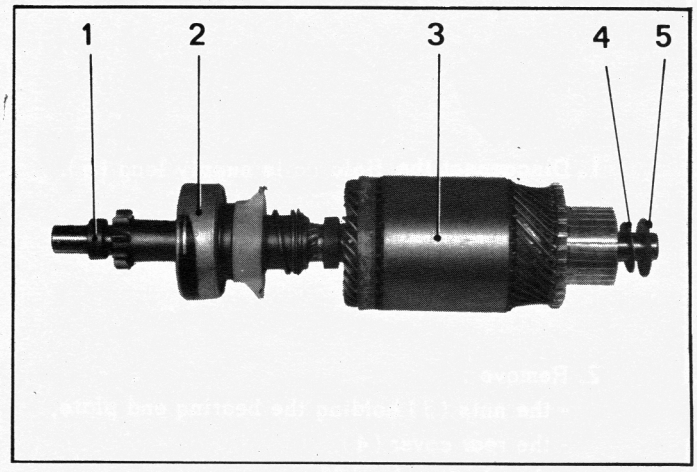

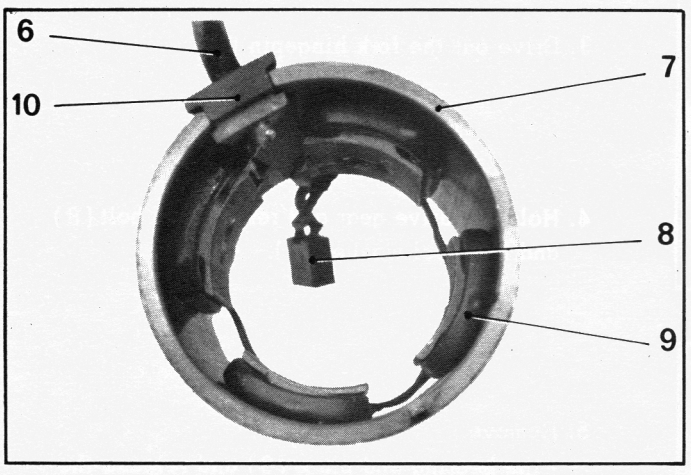

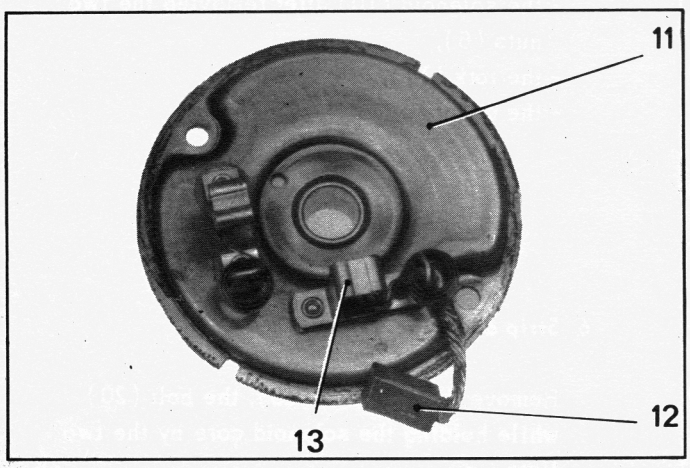

7. Strip down the armature (3) :
Remove :
- the celoron washer (5),
- the steel washer (4),
- the thrust bearing snap-ring (1),
- the thrust bearing (1),
- the driving gear (2).

8. Strip down the yoke (7) :
Unsolder (with a soldering iron) :
- the positive brush (8),
- the feed cable (6) to the field coils.

Remove the insulation piece (10).
Loosen the four bolts holding the pole pieces. Use a short screwdriver held in place by means of a bench press.
Remove :
- the field coils (9)
- the « Press-pahn » insulating material.

9. Strip down the bearing end plate (11) :
Check the insulation of the positive brush-holder in relation to the end plate using a 110 or 120 volts test lamp. If the lamp lights up, the brush-holder is badly insulated and the bearing end plate must be replaced.
Unsolder the negative brush (12) with a soldering iron.

10. Clean the parts.

FITTING.

11. Inspect the armature shaft in two « V » blocks or between points. *The maximum tolerated out of round is 0.15 mm.*

12. Check the armature on growl tester.

13. Skim the commutator. *The original diameter (32 mm) should not be reduced by more than 2 mm.*
After skimming, undercut the insulators between the segments of the commutator using a saw-blade thinned down to the same size as that of the insulation slots (0.70 mm), or a scraper.

14. Check the brushes for wear and ensure that they slide freely.
If they are less than 7 mm long, replace them.

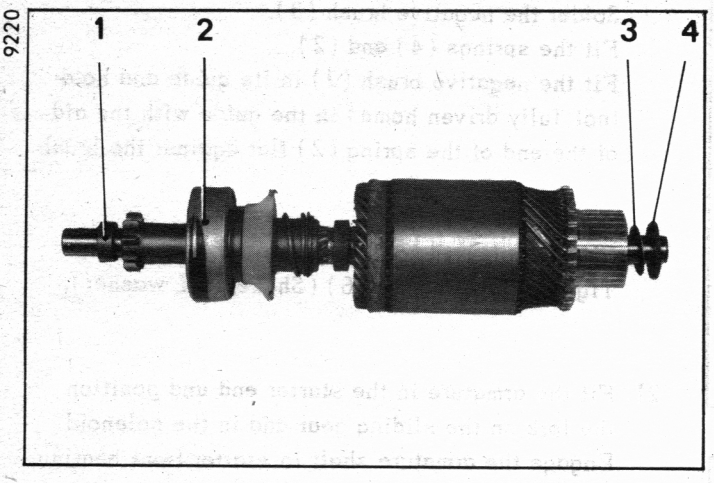

15. Check the solenoid :

a) Check the resistance of the primary winding using an ohmmeter connected between the solenoid supply terminal (flat strip) and the terminal marked « DEM ». *This resistance should be on the order of 0.24* Ω.

b) Check the resistance of the secondary winding using an ohmmeter connected between the solenoid supply terminal (flat strip) and the solenoid body. *This resistance sould be 1.08* Ω.

If these conditions are not satisfied, replace the solenoid.

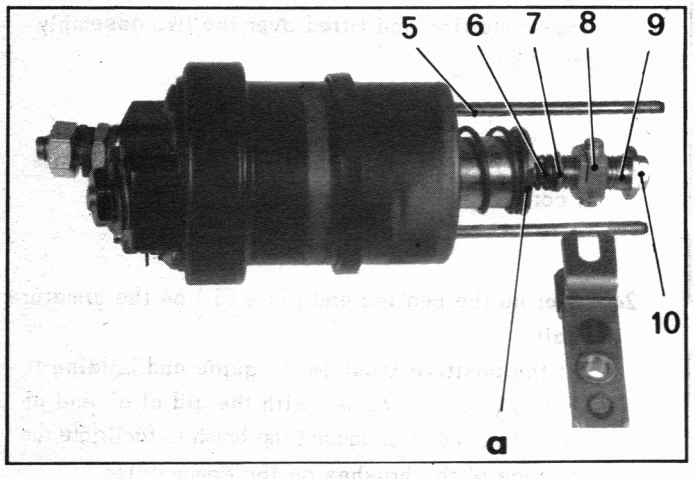

16. Prepare the armature :

Fit the steel washer (3) and then the celoron washer (4) after oiling them.

Oil the splines (use very thin oil) and fit :

- the drive gear (2),
- the thrust bearing (1) and its stop-ring.

17. Prepare the solenoid :

NOTE : The bolt(10) should be replaced at each dismantling.

a) Fit on the bolt (10) :
   - the adjusting sleeve (9) and preset it halfway along its travel in the nut (8),
   - the celoron washer (7),
   - the spring (6).

b) Now screw the bolt (10) completely into the solenoid core holding the latter with the two flats « a ».

c) Fit the two rods (5).

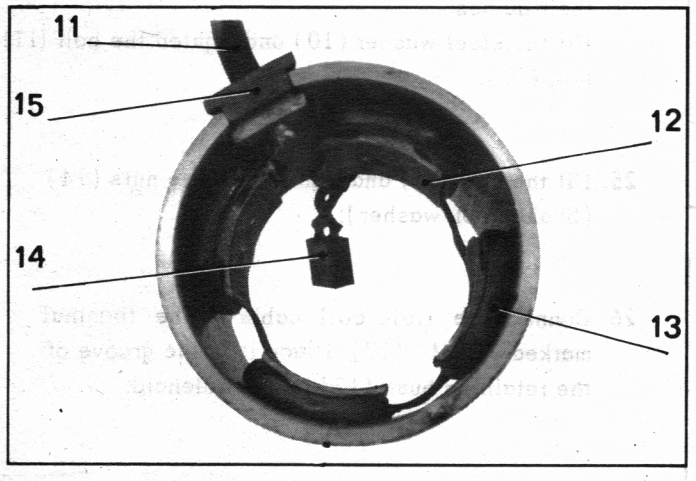

18. Prepare the yoke :

Fit the winding (13) into the yoke and position the pole pieces (12). Hold these in place with the aid of the four holding screws.

Fit the « Press-pahn » insulation under two windings and at the level of the feed cable connections (11) to the windings and the positive brush (14) to prevent a short circuit.

Position the pole faces horizontally and tighten the securing screws with a short screw driver held in place by a bench press.

Fit the insulation piece(15) and the feed cable (11) supplying the field coils.

Solder the cable (11) and the positive brush (14).

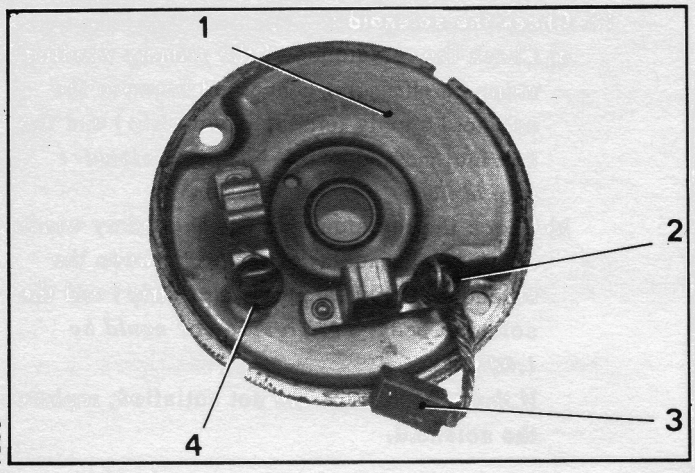

9223

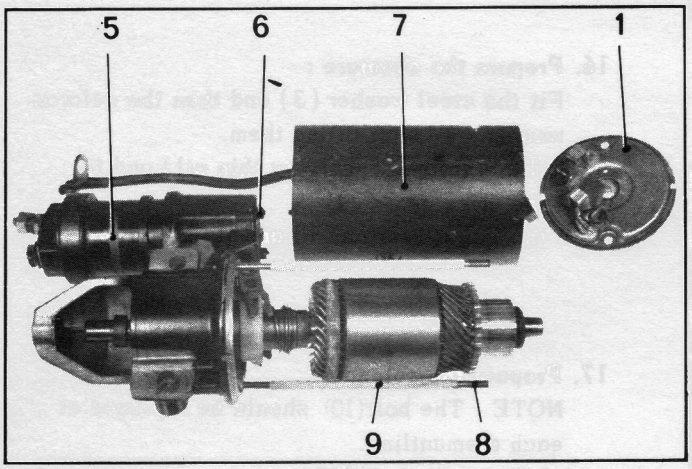

9219

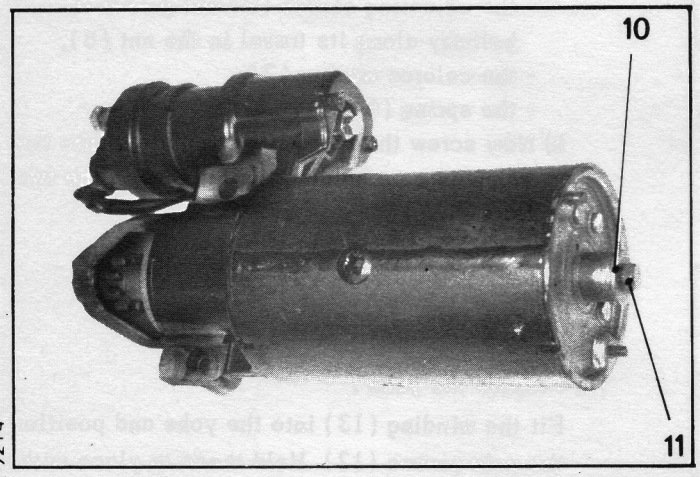

9214

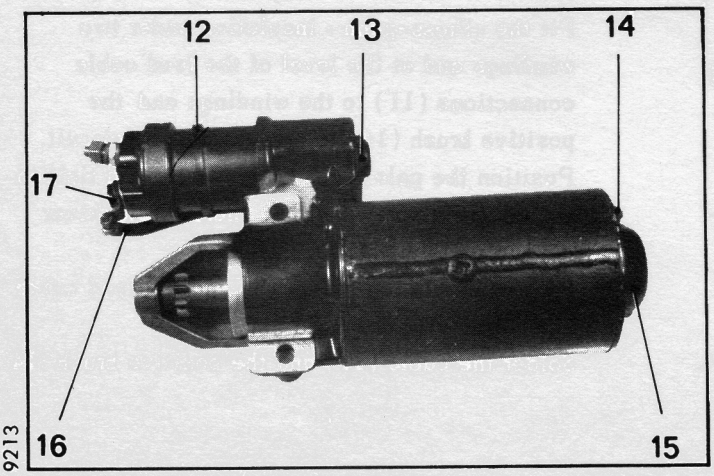

9213

19. Prepare the bearing end plate :
Solder the negative brush (3).
Fit the springs (4) and (2).
Fit the negative brush (3) in its guide and hold (not fully driven home) in the guide with the aid of the end of the spring (2) flat against the brush.

20. Fit the solenoid (5) on the starter driving end.
Tighten the two nuts (6) (Shakeproof washer).

21. Fit the armature in the starter end and position the fork on the sliding gear and in the solenoid.
Engage the armature shaft in starter front bearing.
Fit the split pin into the fork hinge hole.

22. Ensure that the insulating sleeves (9) are in good condition and fitted over the two assembly rods (8).

23. Fit the yoke (7) over the two rods and orientate it correctly.

24. Offer up the bearing end plate (1) on the armature shaft.
Fit the positive brush in its guide and holding it (not fully driven home) with the aid of an end of the spring (4) flat against the brush to facilitate the passage of the brushes on the commutator.
Bring the end plate into contact with the yoke after releasing the brushes.
Fit the springs on the centre of the brushes in their guides.
Fit the steel washer (10) and tighten the bolt (11).
bolt (11).

25. Fit the cap (15) and tighten the two nuts (14) (Shakeproof washer).

26. Connect the field coil cable to the terminal marked « DEM » (17). Place it in the groove of the retaining bush (12) on the solenoid.

27. Adjust the travel of the starter drive.

28. Fit the plastic plug (13).

II. STARTER MOTOR TYPE PARIS-RHONE D8 . E103

10172

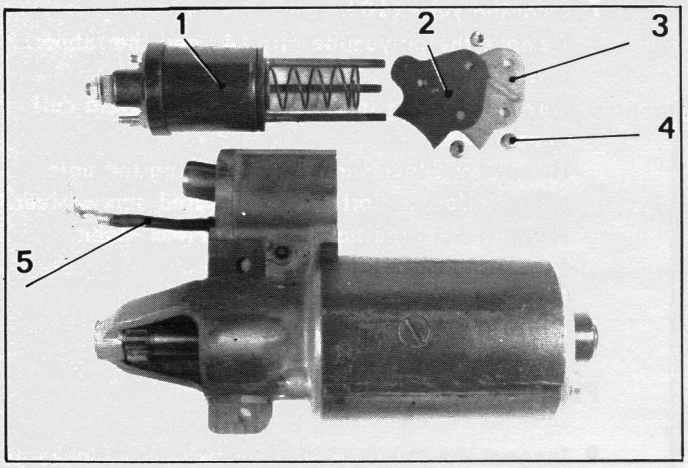

10174

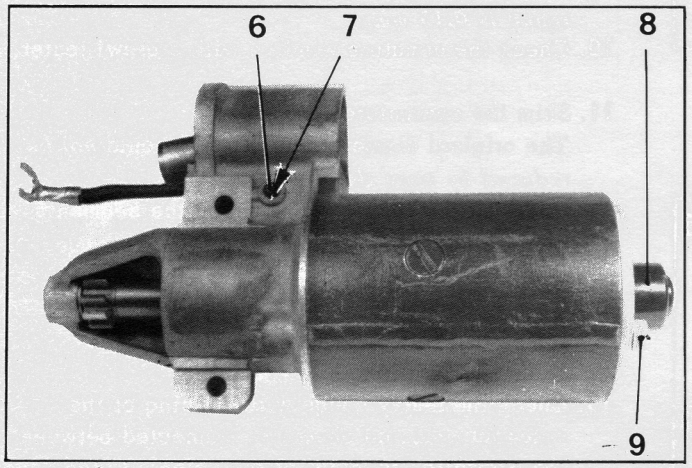

10175

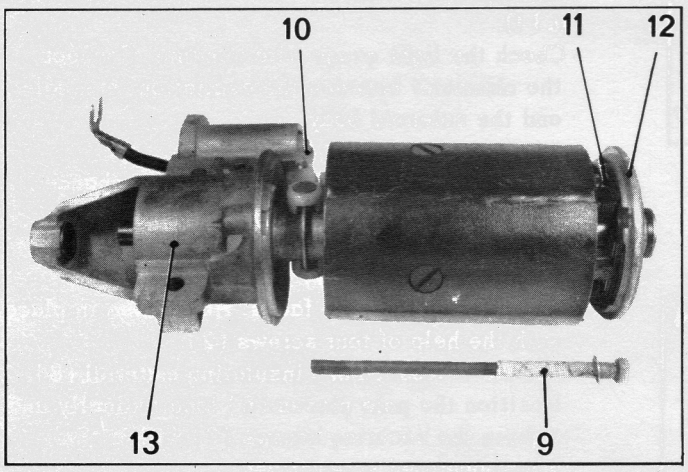

DISMANTLING.

1. Remove the solenoid :
   Disconnect the field coil cable (5).
   Remove the three nuts (4) and release :
   - the clamp plate (3),
   - the fibre seal (2),
   - the solenoid (1).

2. Pull off the plastic cap (8).

3. Drive out the hinge pin (6) of the operating lever and its support (7).

4. Remove the two assembly bolts (9).
   Partly separate the end plate, commutator end (12), from the yoke and lift the positive brush (11) from its guide.
   Remove :
   - the starter bearing, driving end (13),
   - the operating lever (10),
   - the end plate (12) commutator end, armature and starter drive assembly,
   - the starter drive (14).

5. Remove the end plate, commutator end, (12) from the armature (18).
   To do this, remove the bolt (16), the thrust washer (15), the friction washer (17).
   Release the end plate (12), the bakelite coated washer (20), the steel washer (19), the flexible washer (23) and the steel washer (24).

6. Strip the end plate, commutator end (12) :
   Unsolder the negative brush (21) :
   Clean the end plate and check the positive brush-holder insulation (22) using an ohmmeter or a 110 or 220 volts test lamp. If the lamp lights up, the positive brush-holder is badly insulated, and the end plate (12) must be replaced.

10178

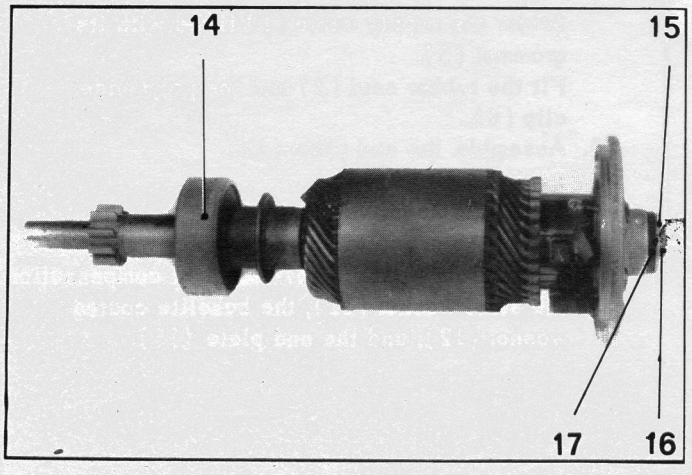

10179

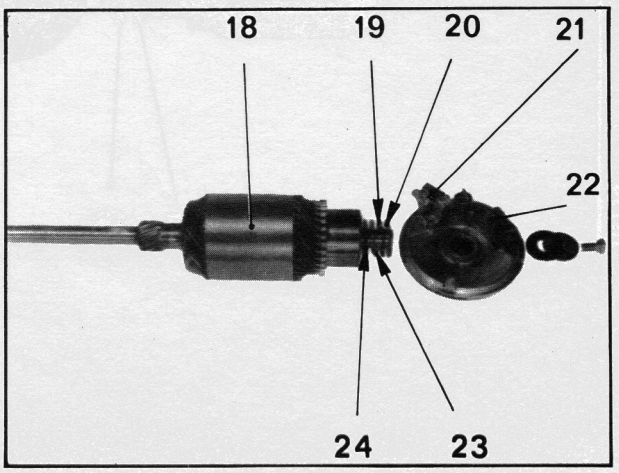

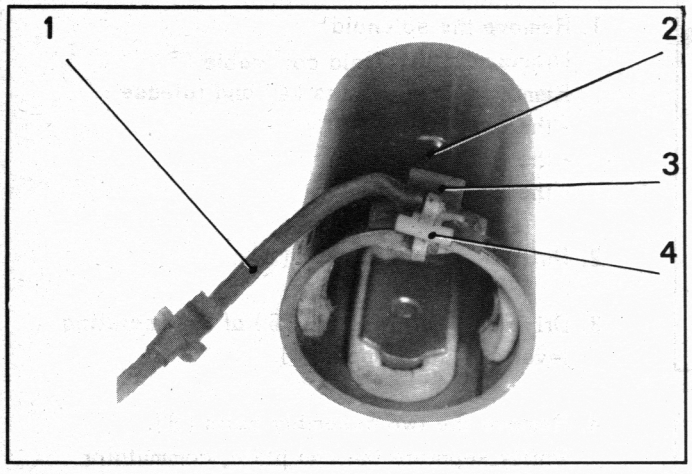

1C177

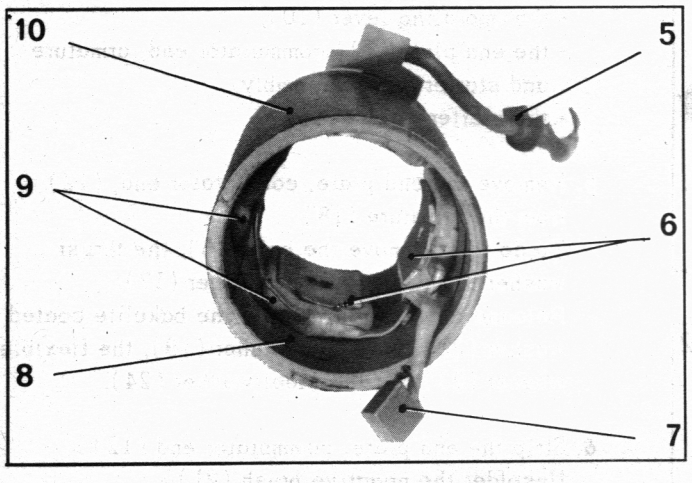

10176

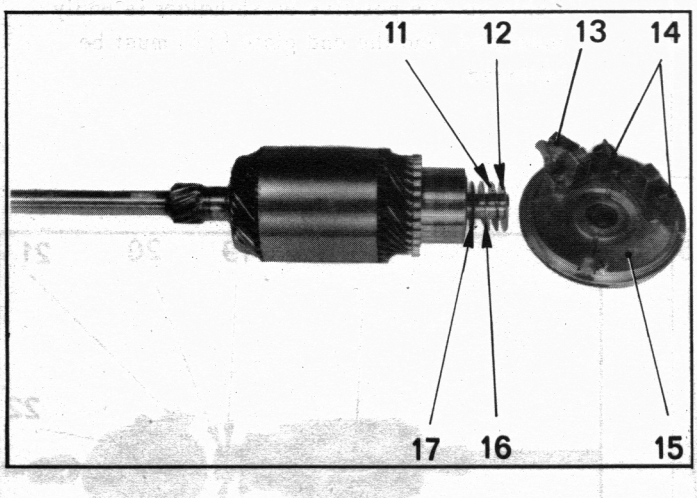

10179

7. Strip the yoke (10).
Remove the polyamide clip (4) and the rubber seal (3).
Use a soldering iron to unsolder the field coil supply lead.
Remove the four screws (2) holding the pole pieces. Use a short wheel-operated screwdriver.
Remove the windings and the «Press -pahn » insulating material (8).
Unsolder the positive brush (7).
8. Clean the parts.

FITTING.

9. Inspect the armature shaft in two « V » blocks or between points. *The maximum tolerated out of round is 0,15 mm.*
10. Check the armature winding with a growl tester.

11. Skim the commutator.
The original diameter (36.5 mm) should *not be reduced by more than 1,5 mm.*
Undercut the insulators between the segments using a saw blade thinned down to the same width as that of the slots, or a scraper.
12. Check brushes for wear :
Nominal length = 14 mm.
Minimum worn length = 7 mm.
13. Check the heavy gauge wire winding of the solenoid using an ohmmeter connected between the excitation terminal of the solenoid (tag) and the opposite terminal. *The resistance must be 0,3 Ω.*
Check the light gauge wire winding. Connect the ohmmeter between the excitation terminal and the solenoid body.
The resistance must be 1 Ω.
If these conditions are not satisfied, change the solenoid.
14. Prepare the yoke :
Fit the field coils (9) in the yoke (10) and offer up the pole faces. Hold these in place with the help of four screws (2).
Fit the «Press -pahn » insulating material (8).
Position the pole pieces (6) longitudinally and tighten the securing screws (2) with a short wheel-operated screwdriver.
Solder the lead to the positive brush (7).
Solder the supply cable (1) fitted with its grommet (5).
Fit the rubber seal (3) and the polyamide clip (4).
15. Assemble the end plate (15).
Fit the springs (14).
Solder the negative brush (13).
16. Fit on the armature shaft the steel washer (17), the flexible washer (16) (end-float compensation) the steel washer (11), the bakelite coated washer (12), and the end plate (15).

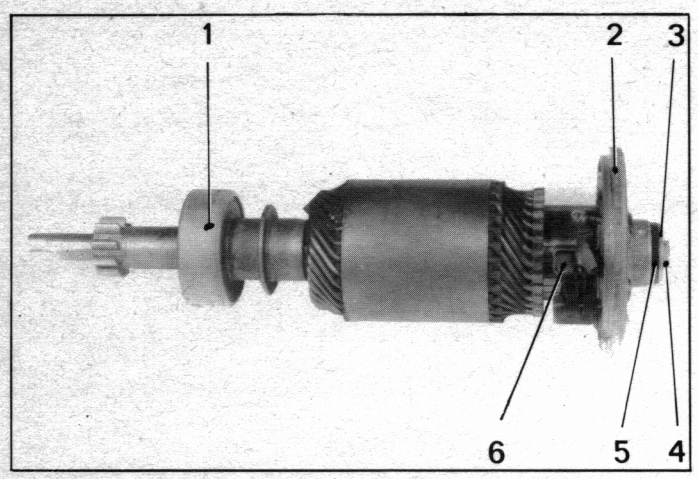

17. Secure the end plate (2) on the end of the armature shaft.
Fit the friction washer (5) and the thrust washer (3). Tighten the bolt (4).
Fit the negative brush in its guide and bring the spring into contact with the brush.
Fit the plastic cap (17).

18. Oil the armature splines with « ANTAR RT 96 » grease and fit the starter drive (1).

19. Fit the armature into the yoke.
Fit the end plate (2).
Insert the positive brush into its guide and fit the spring.

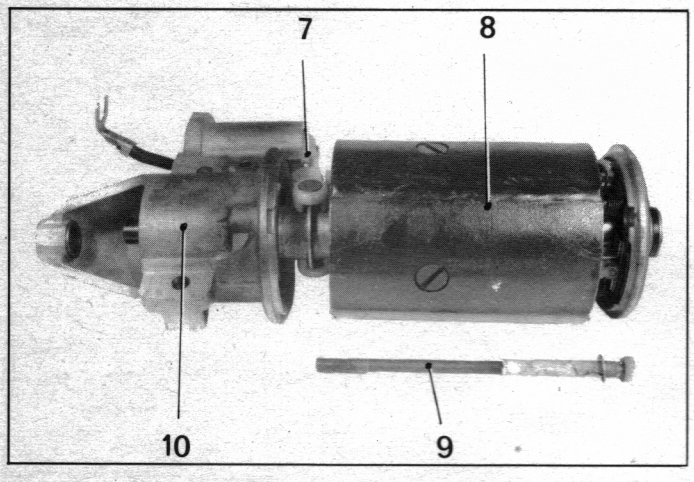

20. Offer up the starter drive bearing (10) with the operating lever (7).
Position the latter on the starter drive (1).

21. Press the starter drive bearing (10) and the end plate (2) against the yoke (8).
Fit the assembly rods (9). (The rod with insulating tape (see illustration), placed between the two brush supports).
Tighten them to 8 to 11 mAN (0.8 to 1.1 m.kg).

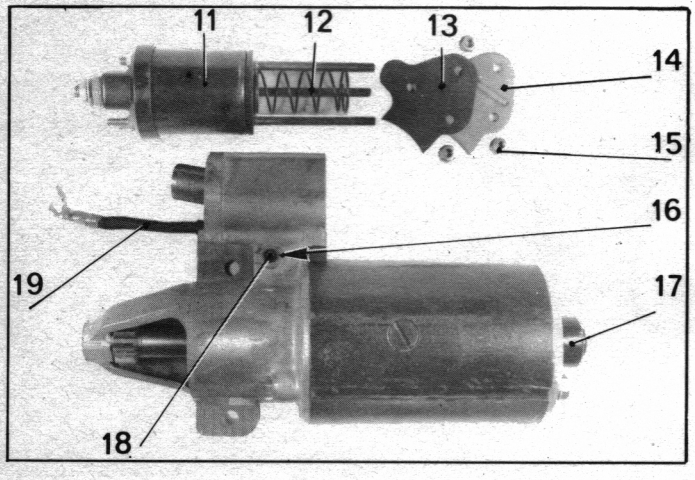

22. Fit the support (16) for the operating lever hinge pin and the pin (18).

23. Fit the solenoid (11) equipped with its spring (12) and orientate it correctly.
Fit the fibre seal (13) and the clamp plate (14).
Tighten the nuts (15).
Connect the field coil supply cable (19).

24. Check and adjust the starter drive :

LIST OF SPECIAL TOOLS MENTIONED IN THE THIRD SECTION OF THE MANUAL 810-2

DESCRIPTION	REFERENCE of tool on sale
(2) CARBURATION	
Kit for checking fuel pump pressure	4005-T
(3) IGNITION	
Gratuated scale for setting distributor	3093-T

MANUAL N° 810 - 2

FOURTH SECTION

BODYWORK

Manual 810-2

FOURTH SECTION

LIST OF OPERATIONS

IN THE FOURTH SECTION OF THE MANUAL N° 810-2

Operations where the number is preceded by the letter « G » are common to all types of vehicles of the « GS » family.
Operations where the number is preceded by the letters « GE » or « GF » are specific to the five-or three-door versions of the « GS » Estate respectively.
Operations where the number is preceded by the letter « Gea » are specific to vehicles fitted with a Torque Converter.

Operations Number	DESCRIPTION
	BODYWORK
G. 800-00	Body preparation - Sealing with sealing compound - Soundproofing
G. 800-0	Checking the body
	BODY PANEL WORK
G. 961-1 a	Replacement of a windscreen
GFv 961-4	Work on the side windows - Replacing a side window
G. 961-7	Work on the rear window - Replacement of the rear window
GE.961-7	Work on the rear tailgate - Replacement of a « bonded » tailgate window - Replacement of a « set-in » tailgate window

SEALING WITH SEALING COMPOUND

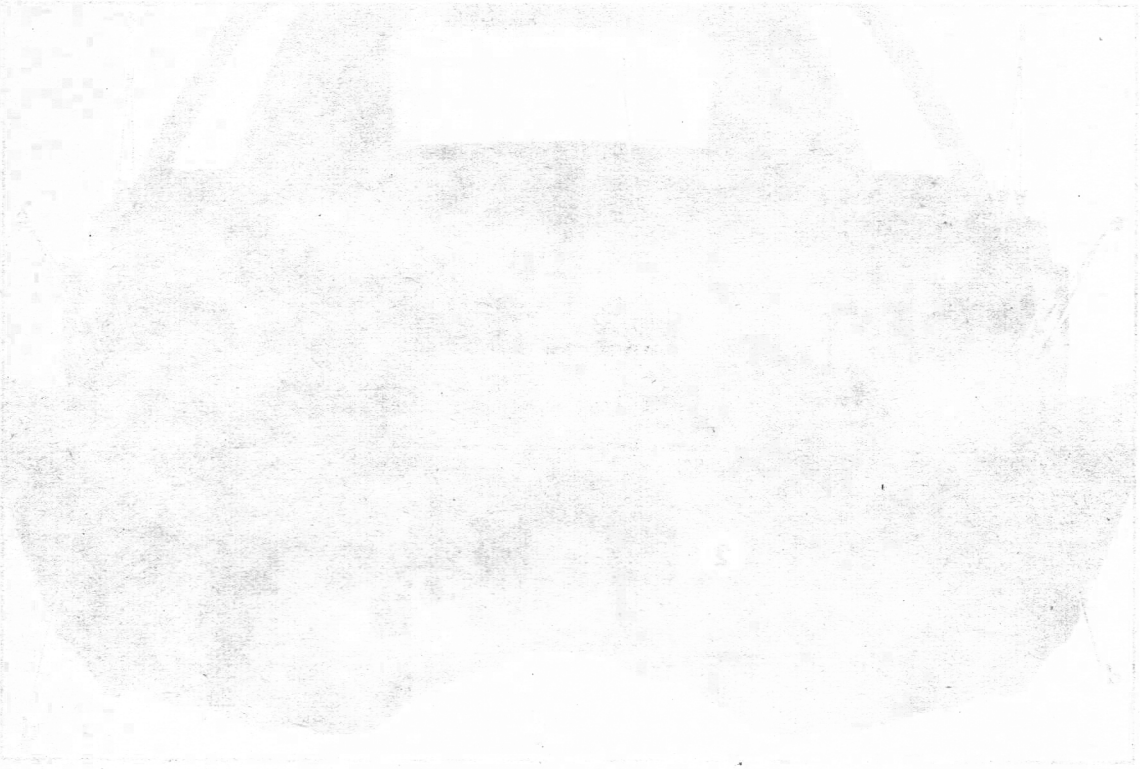

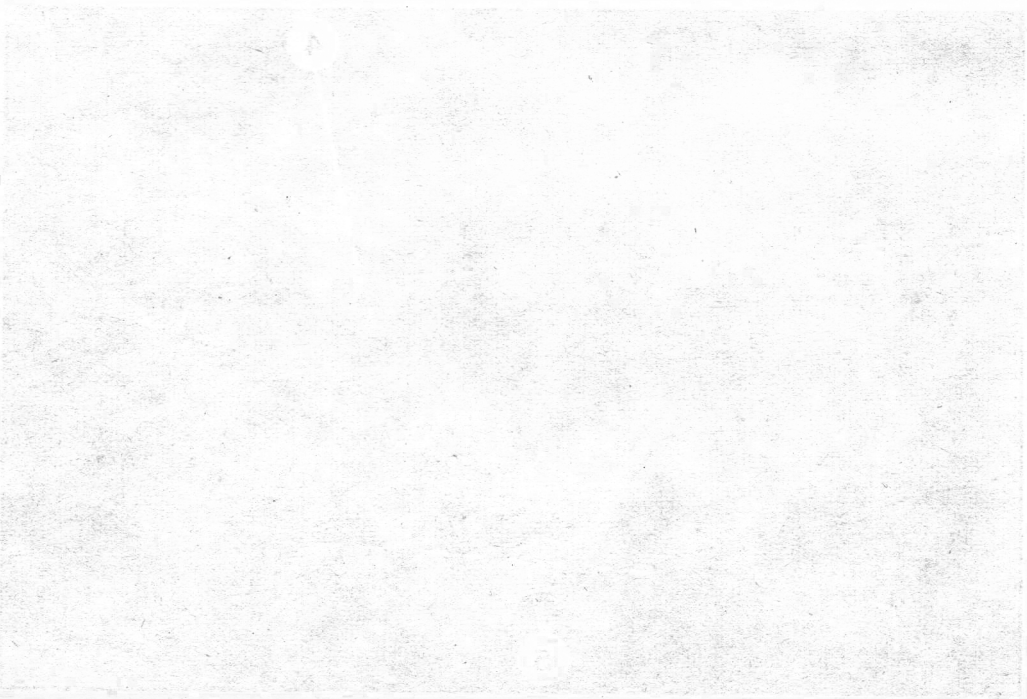

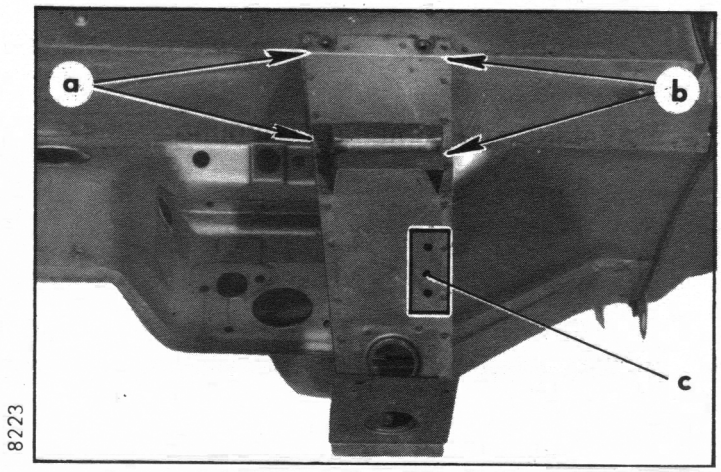
a
b
c
8223

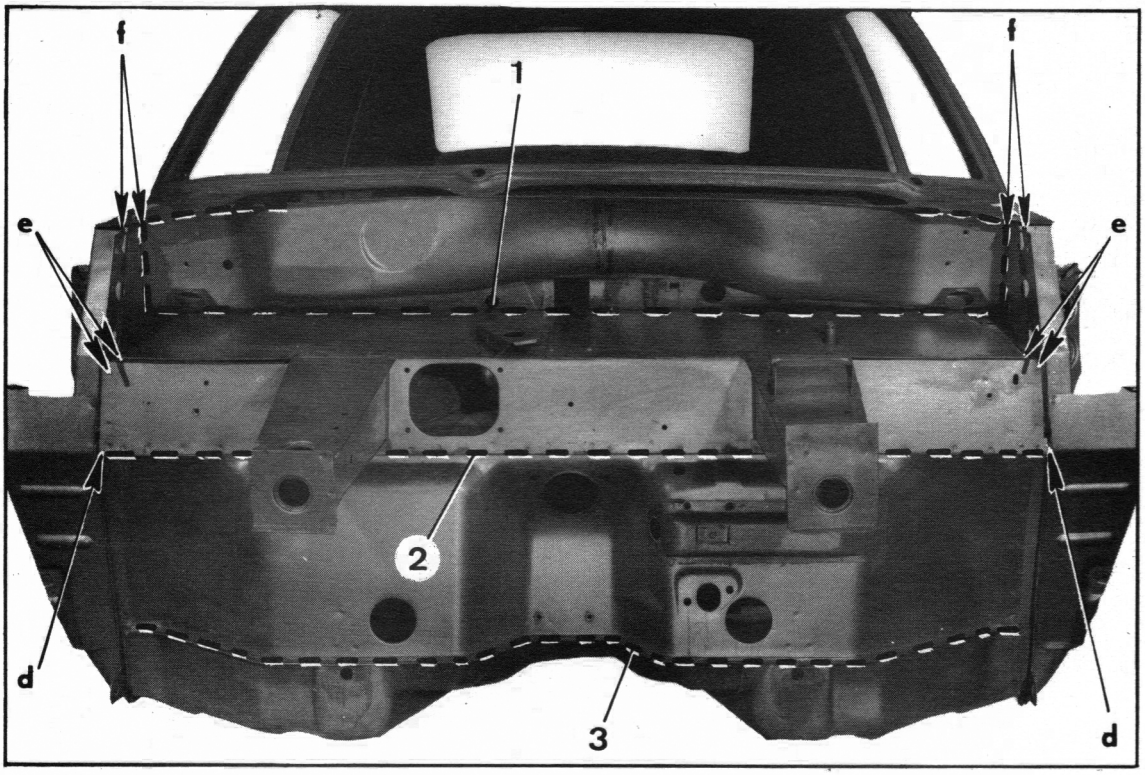
f
f
1
e
e
2
d
3
d
9942

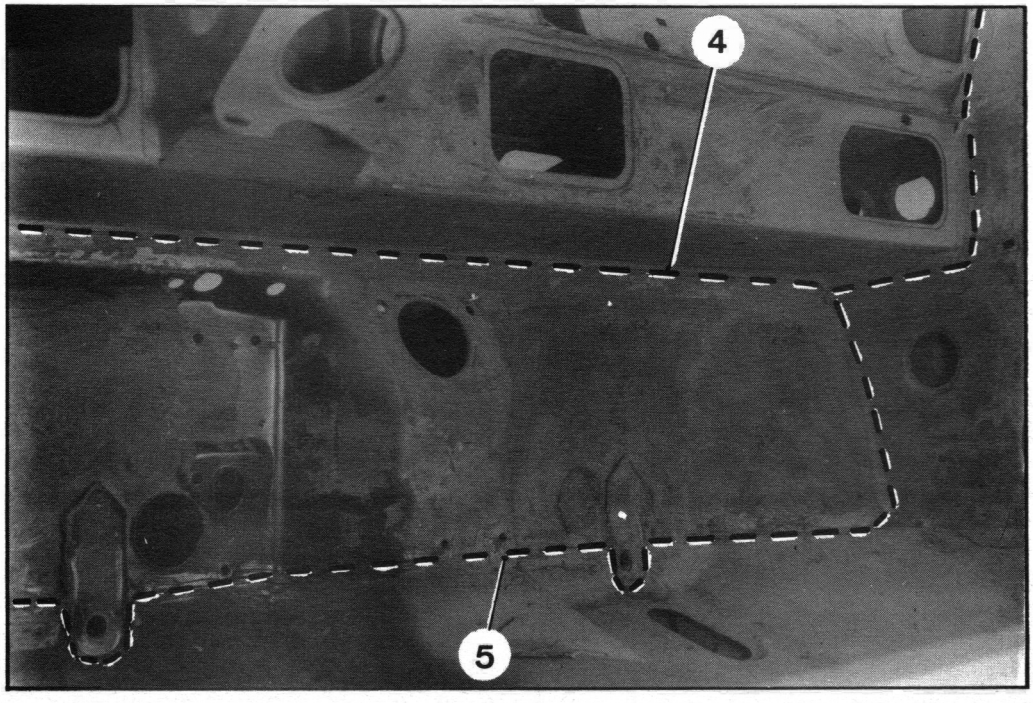
4
5
8224

8251

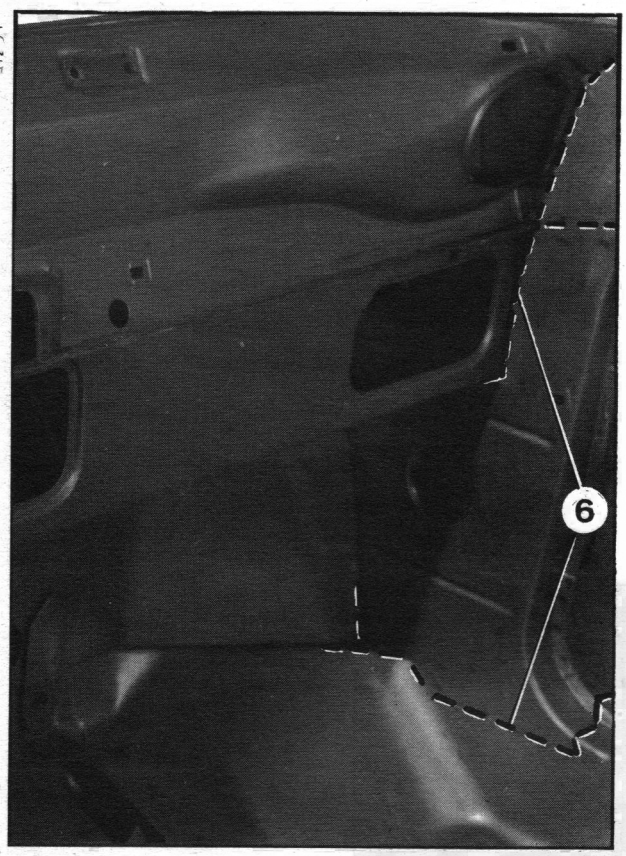

8216

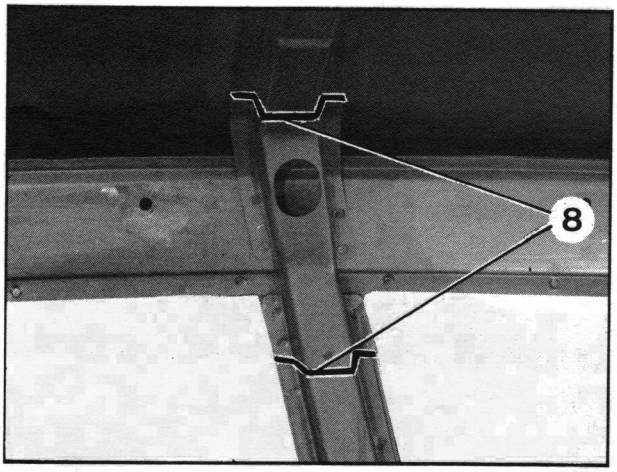

Seal the seams and points as indicated below :

FRONT

- **Extensions :**

  On the left-hand side only : Blanck the holes at « c » (adhesive tape 80 × 25 mm).

  On each side : Join of plates at « a », « b » and « c ».

- **Line 1** : Junction of dashboard/ intake assembly with extension assembly.
  On each side : Junction of plates at « f ».

- **Line 2** : Junction of extension assembly with the lower body panel.

  On each side : Junction of the plates at « d ».

- **Line 3** : Junction of the lower body panel with the central chassis.

- **Line 4** : Junction of the lower body panel with the extension plate.

- **Line 5** : Junction of the lower body panel with the central chassis.

- **Line 6** : Junction of the front body panel with the side panel *on each side.*

- **Line 7** : Junction of the front pillar with the hinge support panel *on each side.*

BODY

- **Line 8** : Junction of the centre pillar with the roof crossmember on the *inside and on each side.*

8220

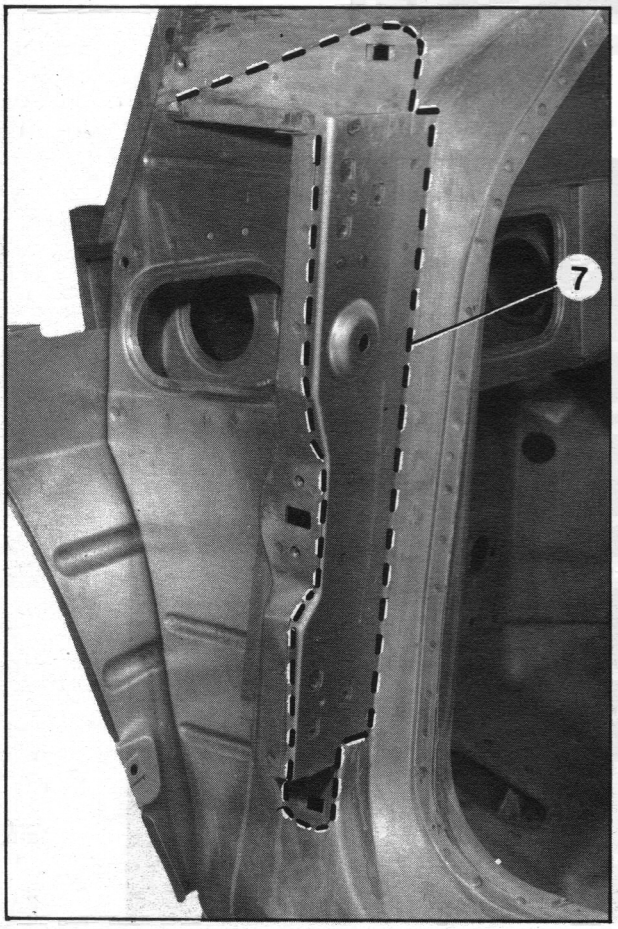

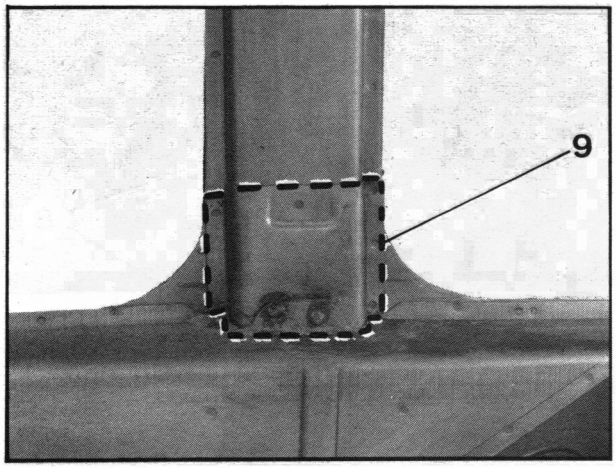
9
8217

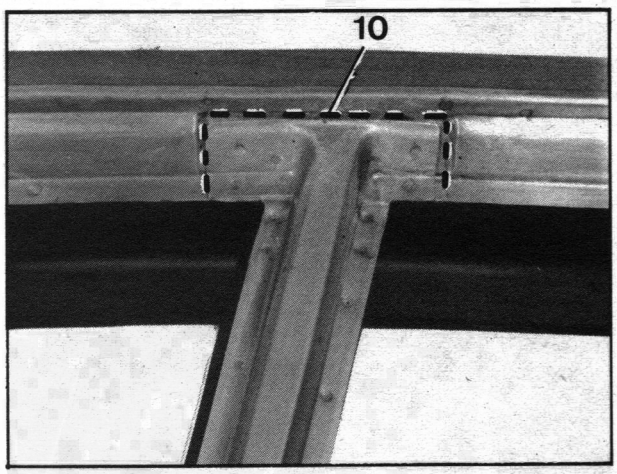
10
8218

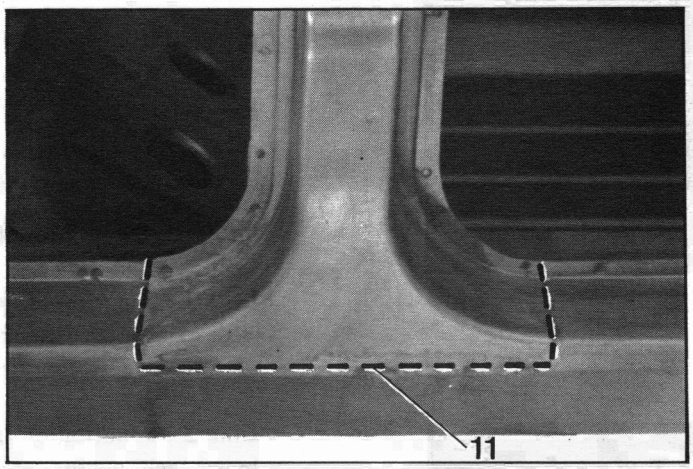
11
8219

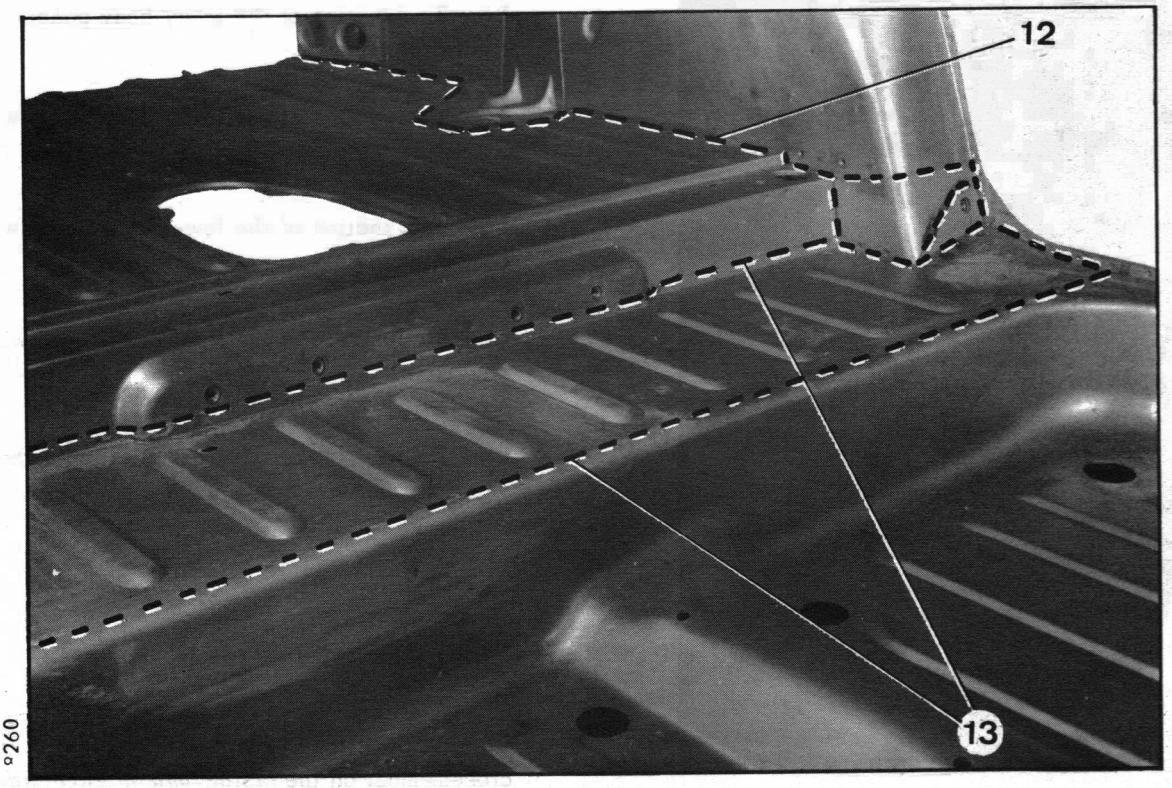
12
13
9260

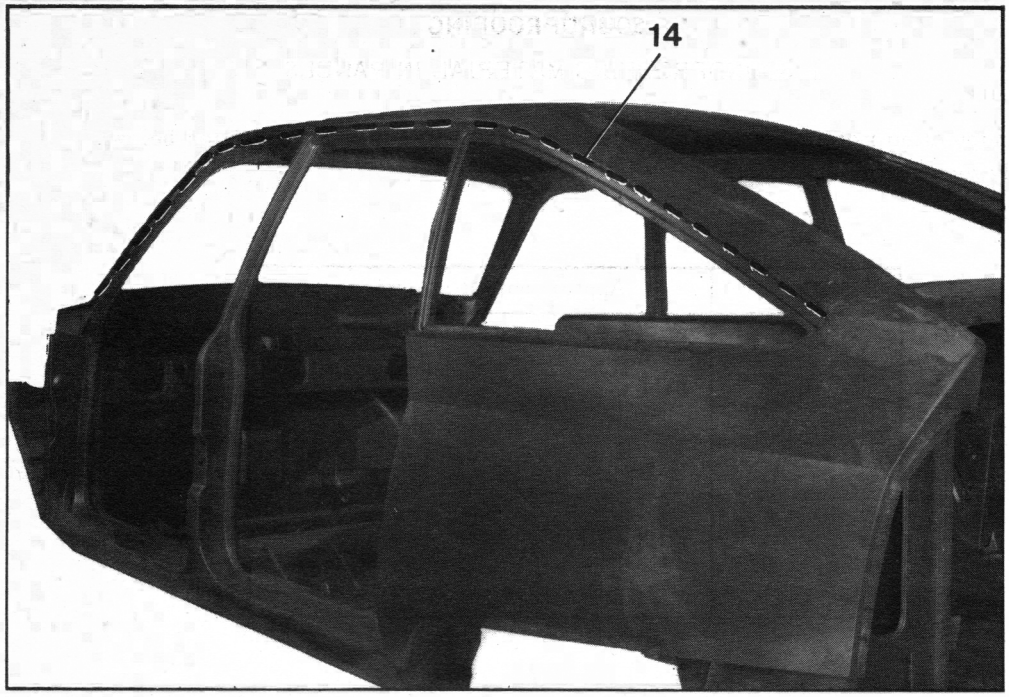

8209

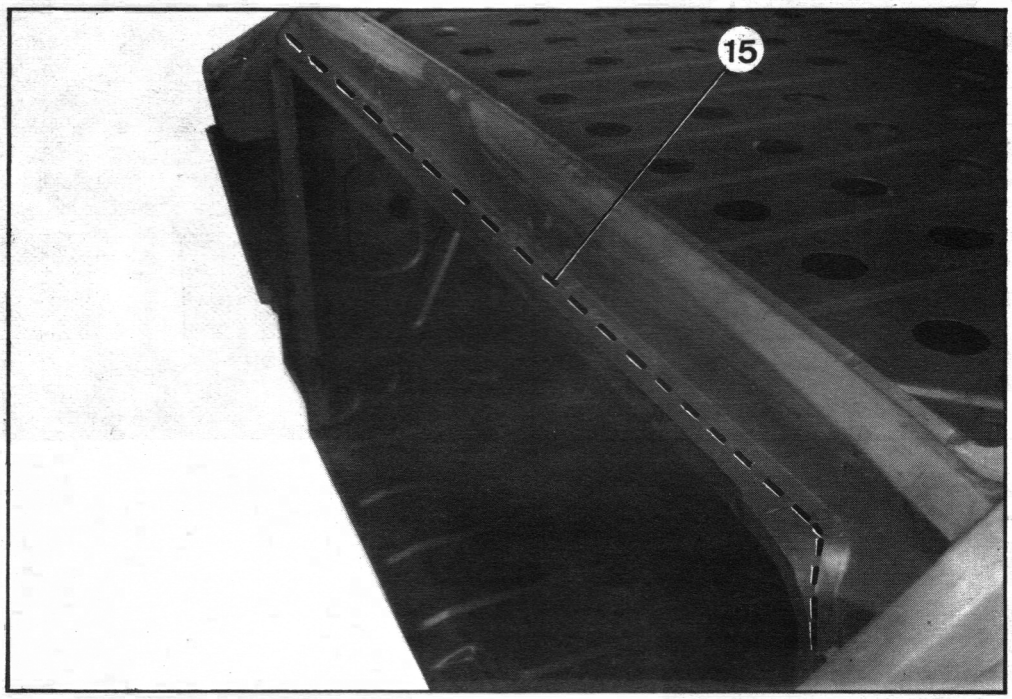

8256

- **Line 9** : Junction of the central pillar with the underbody, *inside and on each side.*

- **Line 10** : Junction of the central pillar with the cantrail of the roof, *on the inside and on each side.*

- **Line 11** : Junction of the central pillar with the underbody, *on the inside and at each side.*

- **Line 12** : Junction of the wheel arch with the boot floor, *on each side.*

- **Line 13** : Junction of the boot bottom with the underseat crossmember.

- **Line 14** : Junction of the guttering rail with the roof panel, *on each side.*

- **Line 15** : Junction of the rear parcel shelf with the lower roof crossmember.

SOUNDPROOFING

I. SOUNDPROOFING MATERIAL IN PANELS

Fit soundproofing material in panels in the zones indicated in the illustration below.
Use only recommended products.

Mark	Approximate dimensions
a	200 × 550 mm openings not
b	200 × 570 mm included
c	450 × 450 mm
d	450 × 450 mm
e	360 × 450 mm
f	360 × 450 mm
g	80 × 80 mm
h	80 × 80 mm
i	80 × 80 mm

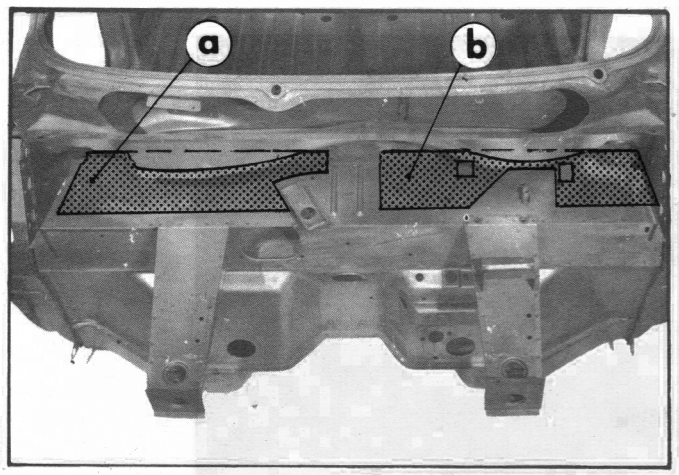

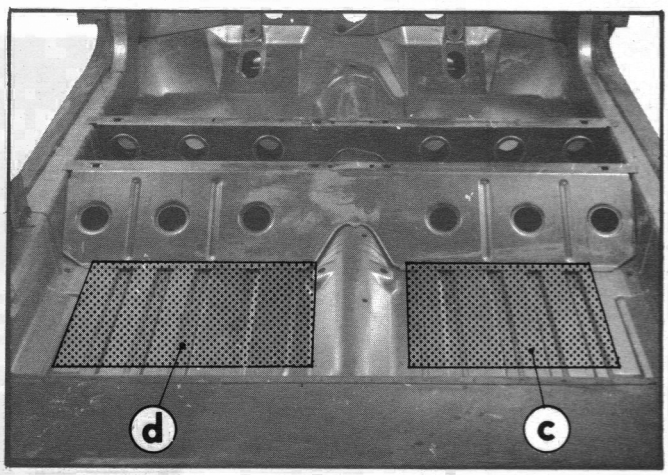

3223

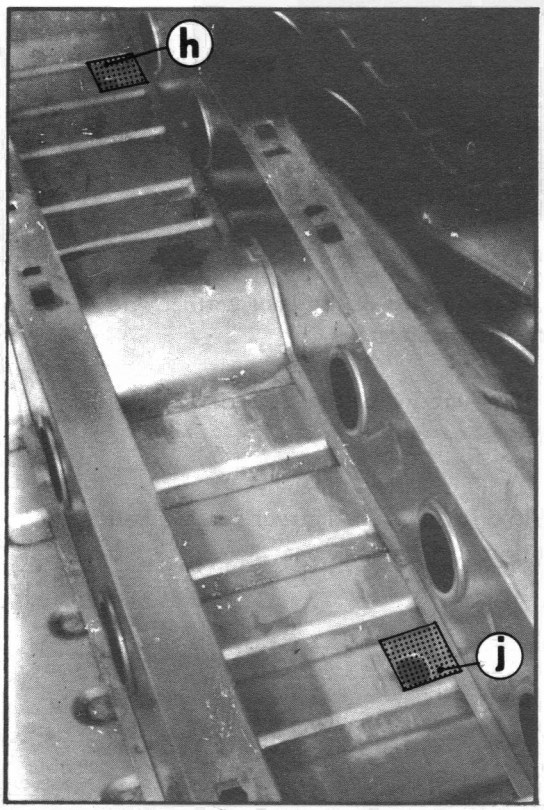

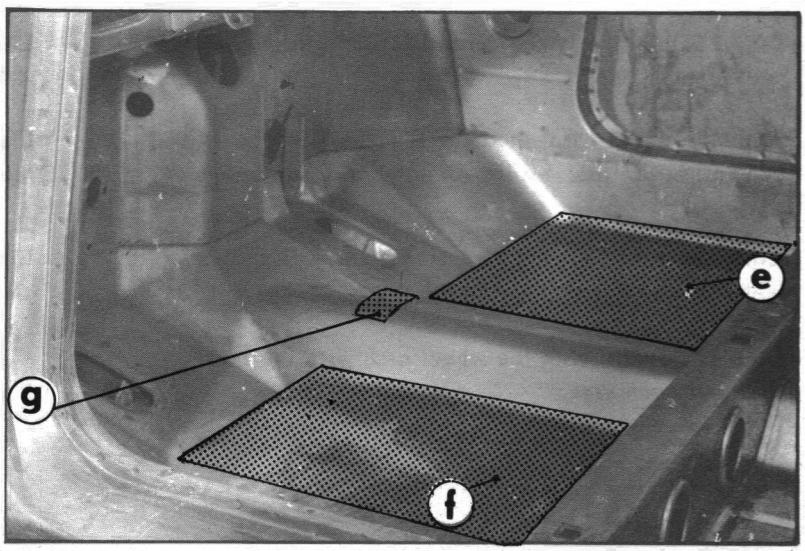

8310

II. SEMI-LIQUID, SOUNDPROOF AND PROTECTIVE COATING

For this operation, use only recommended products.

8222

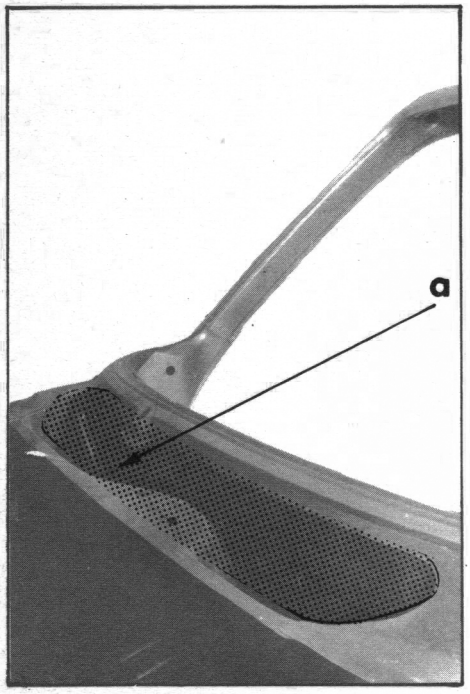

10651

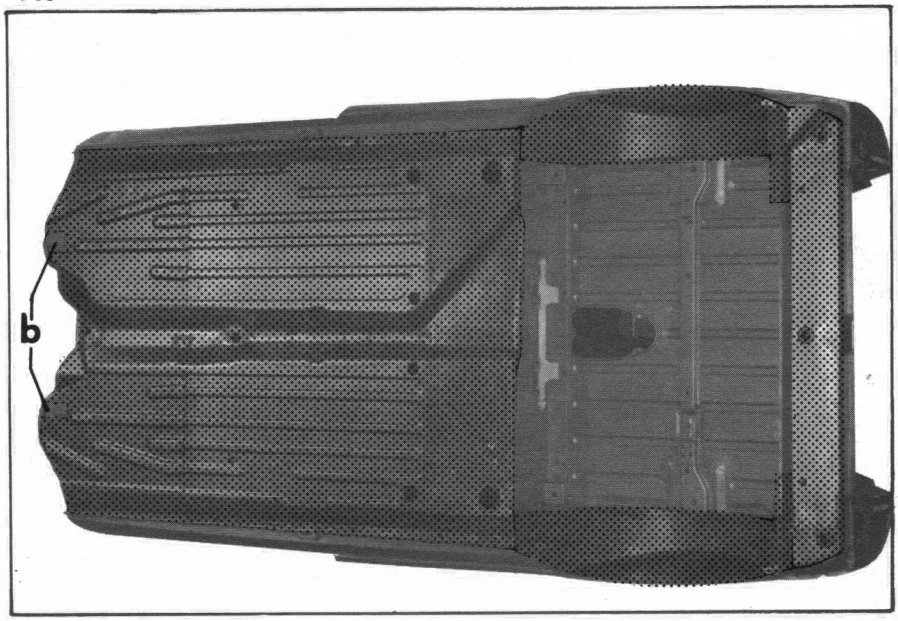

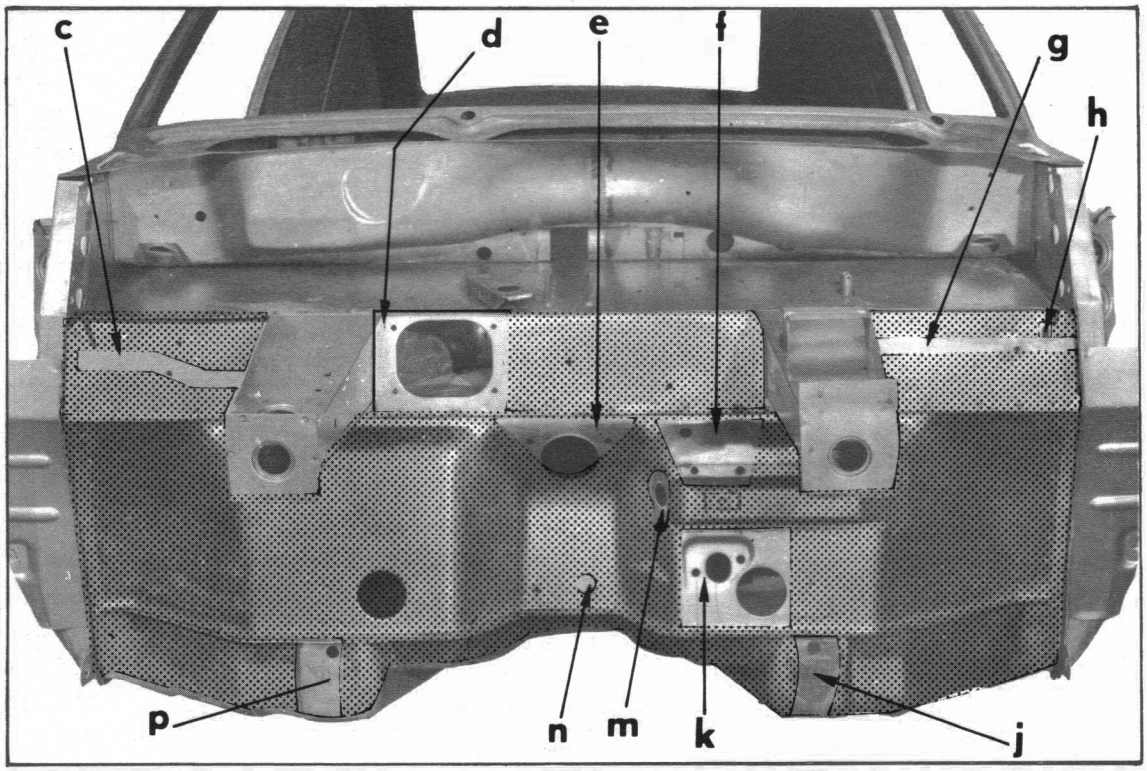

Apply the soundproofing products on the shaded zones shown in the above illustration.

Figure 1 : The scuttle
Before application mask the area where the windscreen wiper motor fits at « a ».

Figure 2 : The underbody, the rear wheel arches and the rear crossmember
Before application, mask the areas « b » where the lower mountings of the front suspension unit fit.

Figure 3 : Front body panel
Before application, mask :

- the wheel arch mountings at « c » and « g »,
- the fan mounting at « d »,
- the gear lever opening at « e »,
- the foot pedal mounting at « f »,
- the opening for the bonnet control at « h »,
- the suspension unit mountings at « j » and « p »,
- the brake control valve mounting at « k »,
- the accelerator linkage opening at « m »,
- the access hole at « n ».

CHECKING A VEHICLE WITH ACCIDENT DAMAGE

When checking a vehicle with accident damage, the checks must be carried out in the following order :
- Visual check : finding the possible creases, distorsions, splits or twists on the body unit.
- Checking the geometry of the axles using an optical alignment device (without removing the mechanical components)
- Checking the front and rear axle units and the geometry of the body unit (removing the mechanical components)
- Checking the stripped body shell on the jig and possible straightening.

I. VISUAL CHECK

To facilitate finding the distorsions, they have been classed in area of impact in ascending order depending on the force of the impact.

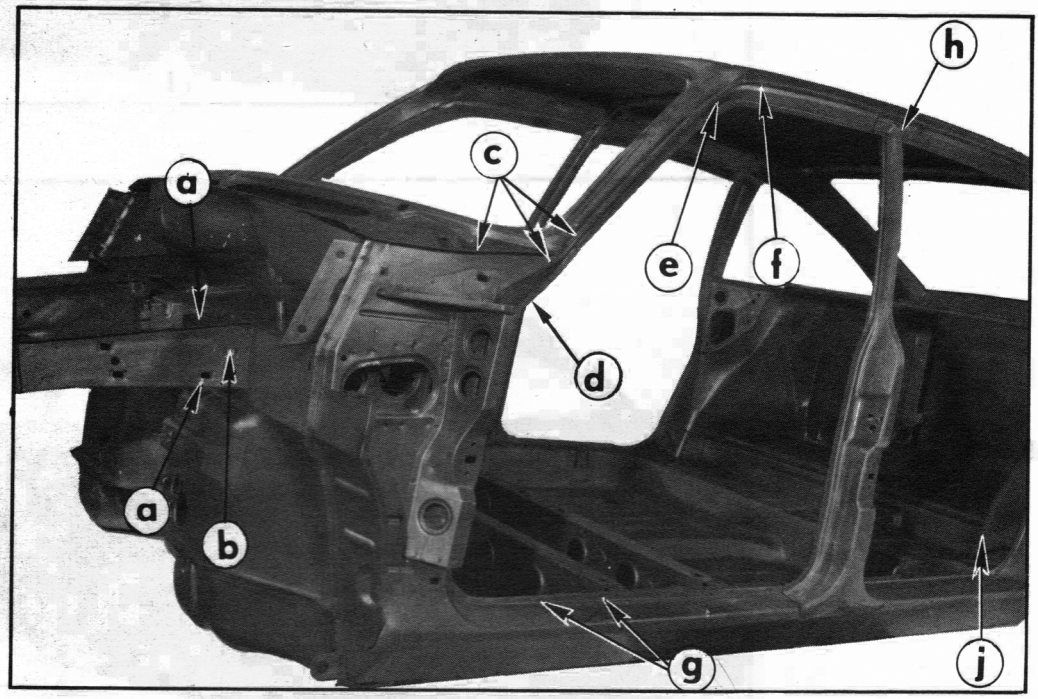

A - FRONTAL IMPACT

The distorsions below are generally found on both sides of the body unit.

1. **Front extensions** : distorsions at « a » on the upper and lower faces, always accompanied by side distorsions at « b » near the scuttle.

2. **Lower windscreen crossmember** : indention at joint « c » with windscreen frame.

3. **Joint between windscreen frame pillar and front door pillar** : Longitudinal indentations in the form of small creases at « d » on the side panel, level with the upper corner of the door.

4. **Roof sidemember** :
Abnormal space between the upper part of the door, the windscreen pillar, and the sidemember. Creases at « e » and « f ».

5. **Body sidemember** : distorsions at « g » between the joint with front door pillar and first crossmember under seats.

6. **Centre door pillar** : in the event of a strong impact, it may be separated from the roof crossmember at « h ».

7. **Heel board** : following a very severe impact, creases may appear at « j » on the heel board, situated under the rear seat.

IMPACT FRONT 3/4

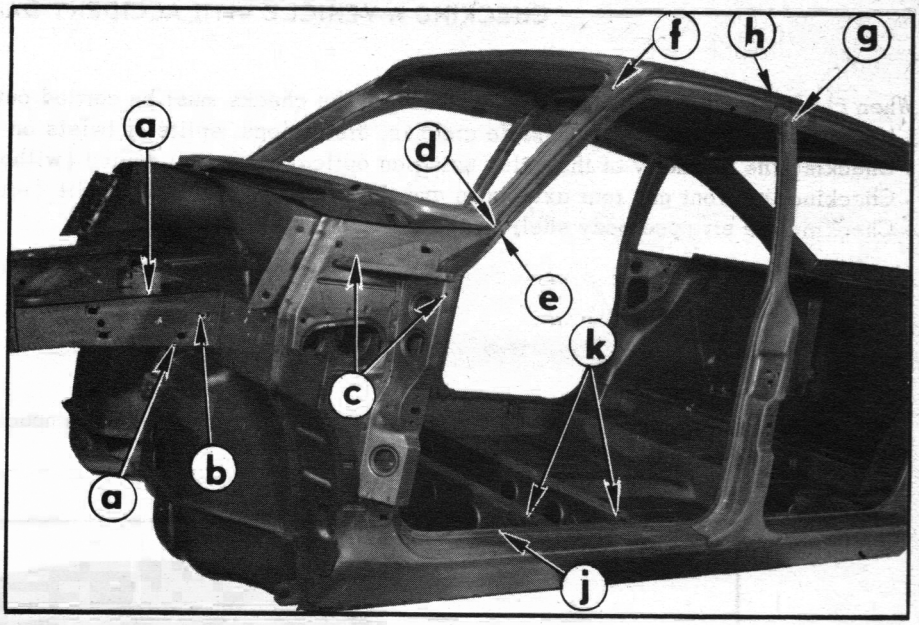

SIDE IMPACT

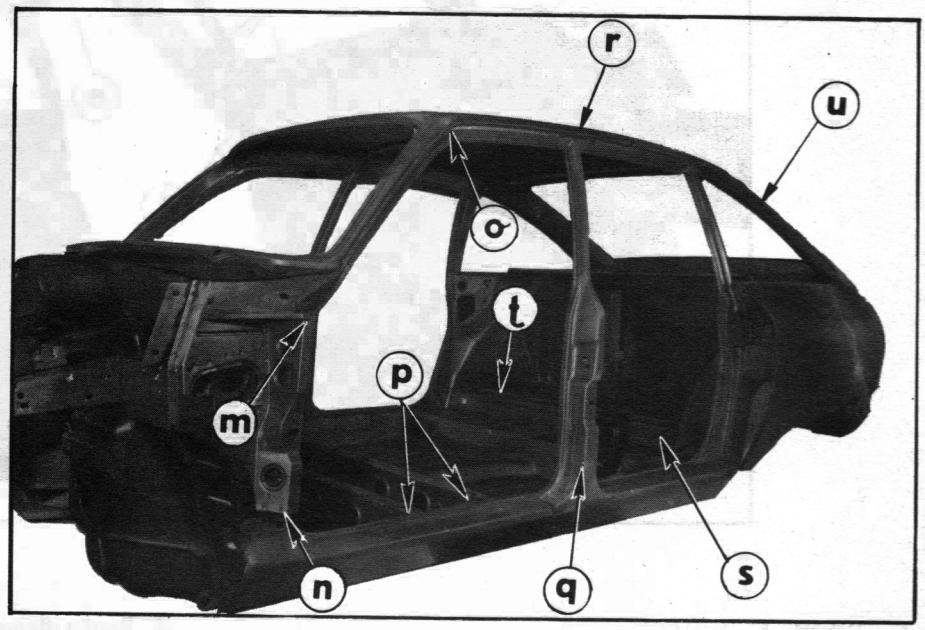

IMPACT REAR 3/4
AND REAR

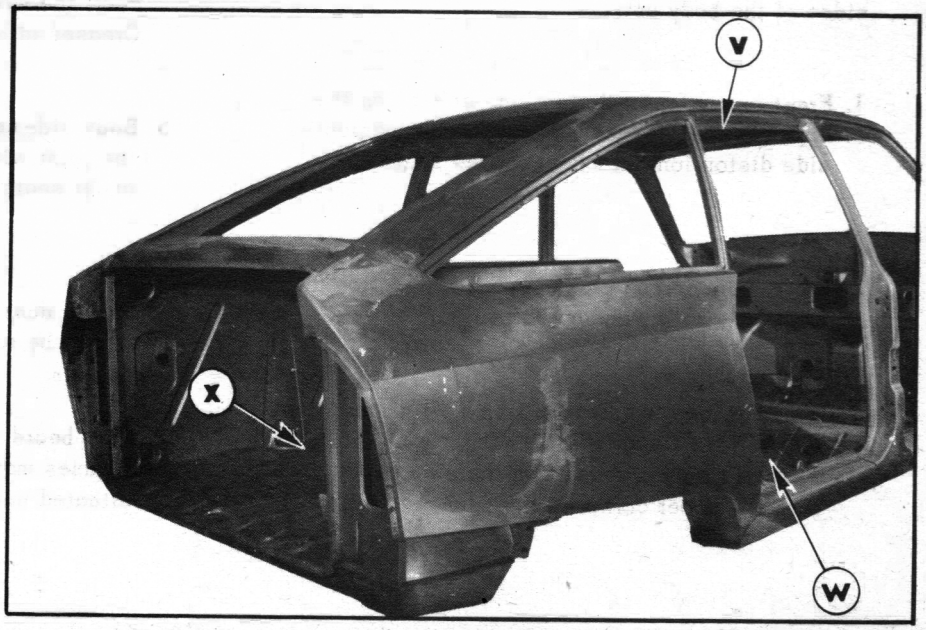

B - IMPACT, FRONT 3/4

1. **Front extensions** : Distorsions at « a » on the upper and lower faces, always accompanied by side distorsions at « b » near the scuttle.
2. **Hinge support and front pillar** : Indentation and pushing back of front pillar at « c » : the door is no longer in line with the side panel.
3. **Lower windscreen crossmember** : Indentation at « d » of front pillar upper part. This produces a distorsion of the lower crossmember and the windscreen frame itself. Splitting on the outer face of the frame, at the bottom, at « e ».
4. **Roof sidemember and windscreen frame pillar** : Presence of indentations at « f » of the solder filling linking the windscreen frame to the roof. Abnormal space between front door upper part and roof sidemember.
5. **Joint between roof and central door pillar** : Distorsion of roof at « g » with dent and fracture of roof edge at « h ». This can sometimes loosen the central pillar.
6. **Body sidemember** : Large creases at « j » on the sidemember and at « k » on the crossmember beneath the seats.

C - SIDE IMPACT

1. **Front door pillar and body sidemember** : Indentation at « m » on front pillar and at « n » on sidemember, with creases on the roof at « o » and the crossmembers beneath the seats at « p ».
2. **Centre pillar and body sidemember** : Indentation at « g » on the pillar and the sidemember with creases on the crossmembers beneath the seats at « p », loosening the central door pillar from the roof sidemember and with creases at « r » on the roof in the region of the joint with the centre pillar.
3. **Rear door pillar and rear wing** : Indentation on rear pillar, wings and wheel arch, with folds on the heel board at « s », on the rear floor at « t » and inner wheel arch. Splitting of the side panel and the roof at « u » above the rear quarter light opening.

D - IMPACT 3/4 REAR OR REAR

1. **Joint between roof sidemember and rear pillar** : Creases at « v » about 10 cm (4") in front of rear pillar.
2. **Joint between body sidemember and heel board** : Creases at « w ».
3. **Rear floor** : Creases at « x » between securing points of rear axle unit.
4. **Various components** : Local distorsions on side panel, rear crossmember, wheel arch, rear lamp plate, lower crossmember for rear window frame, etc...

E - CONCLUSION

If a visual inspection reveals obvious indentations or creases at the places indicated above, **a body jig must of necessity be used.**

On the other hand, if there is some doubt as to the extent of the indentations or creases, it is then essential to check the geometry of the axles, then the front and rear axle units.

II. CHECKING THE GEOMETRY OF THE AXLES

Refer to : Operation G. 410-0 for the front axle

Operation G. 420-0 for the rear axle.

III. CHECKING FRONT AND REAR AXLE UNITS

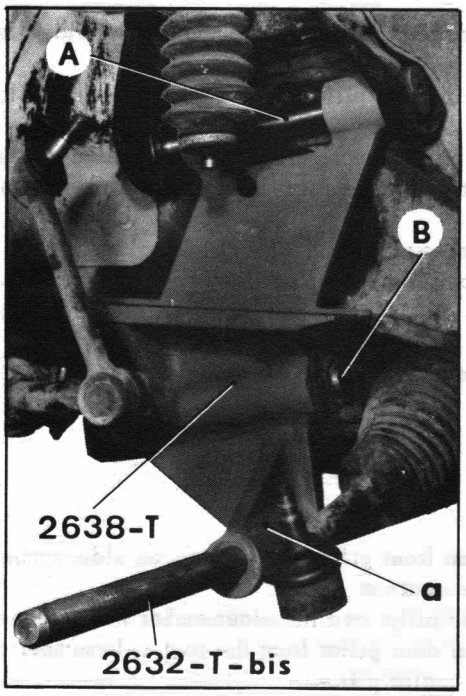

1. Checking the front axle unit :

a) Put vehicle on stands and on a flat horizontal surface, remove from each side :
- the upper and lower axle arms,
- the drive shaft.

b) On each side, offer up tool 2638-T at the securing points of the axle arms.
Fix it, using :
- an upper threaded spindle A : the knurled nut must be positioned towards the rear of the vehicle,
- a lower spindle B : **it must be free in its bore** and the head must be positioned towards the rear of the vehicle.

c) Introduce rod 2632-T bis into the lower bores « a » of the tools : **it must be able to turn and slide smoothly.**
If this is not so, the axle unit is buckled and must be replaced. However, as it is possible that the body itself is buckled, the body must be checked on a jig before fitting a new axle unit, this necessitates removing all the mechanical units (in this case, the checks in § 2 to 4 are not required).
IMPORTANT : In no circumstances must the axle unit be straightened.

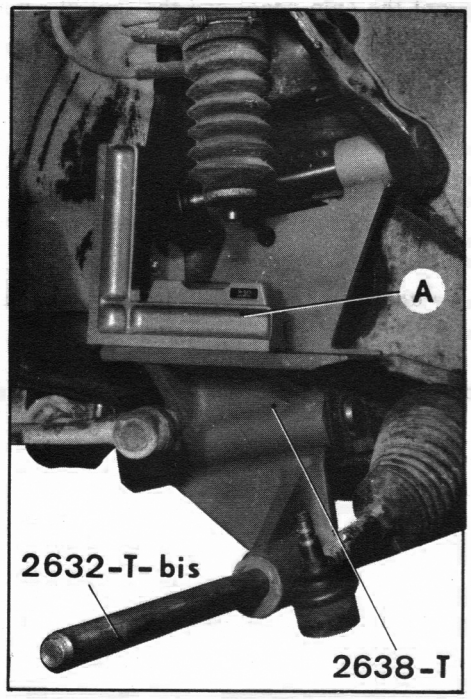

2. Checking rear axle unit :

a) Put vehicle on stands and on flat horizontal surface, remove from each side :
- the axle arm,
- the forward suspension buffer.

b) On each side, position tool 2637-T on the axle arm shaft.

c) Position spirit level C on the foot of one of the tools 2638-T positioned at the front : adjust the bubble to « zero »

d) Position the spirit level C on the foot of each of the tools 2637-T positioned at the rear : using screw (1), adjust the position of each of them so that the spirit level bubble is at « zero ».

e) Introduce rod 2632-T bis in the lower bores « b » of tool 2637-T bis : **it must be able to turn and slide smoothly.**
If this is not so, the axle unit is buckled and must be replaced : in addition this will allow checks to be made to determine whether or not the body itself is buckled.

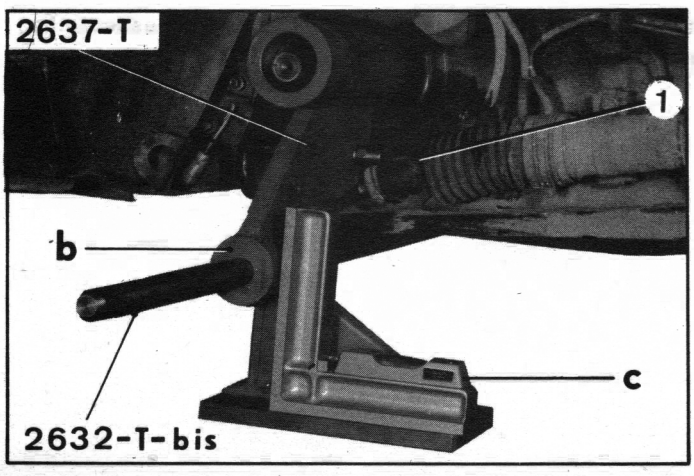

IMPORTANT : *In no circumstances must the axle unit be straightened.*

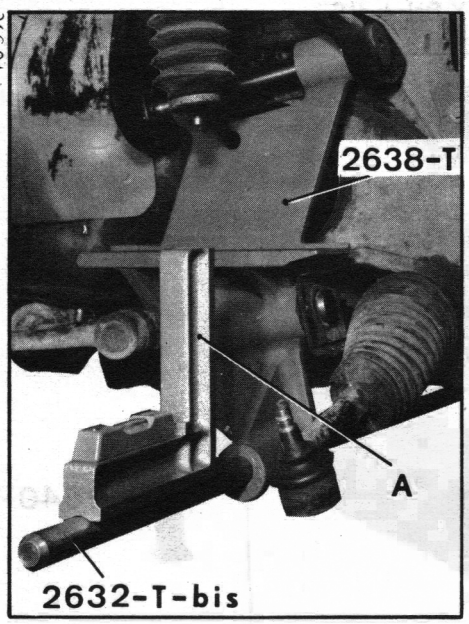

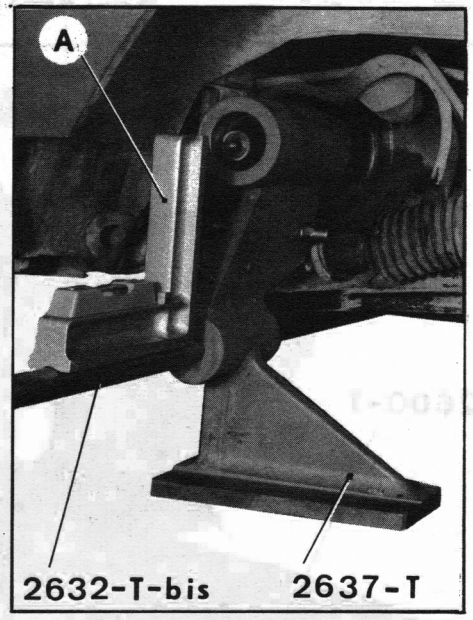

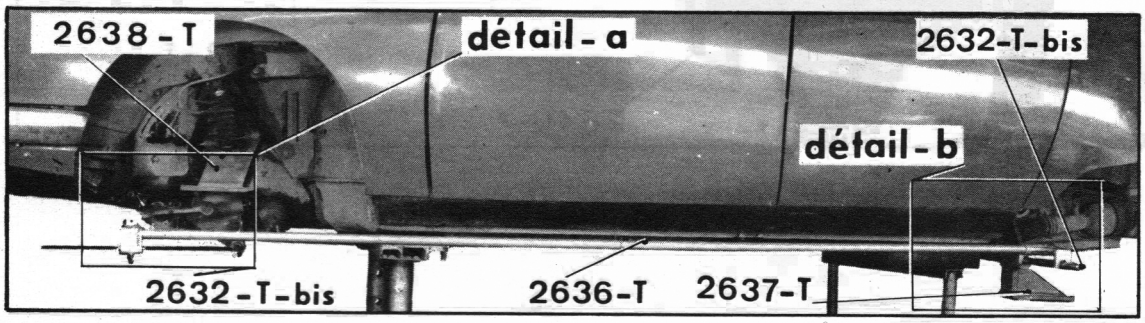

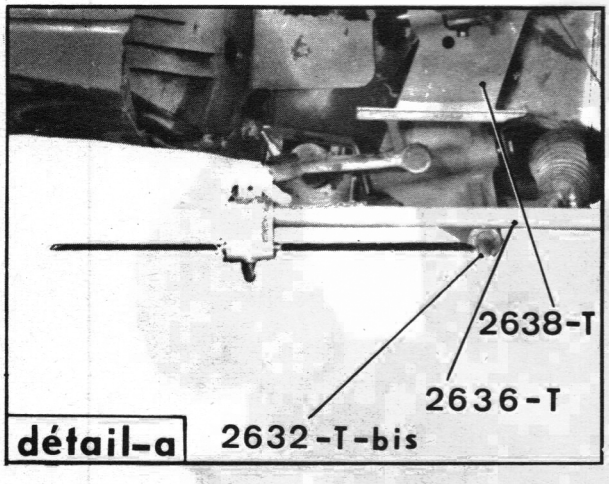

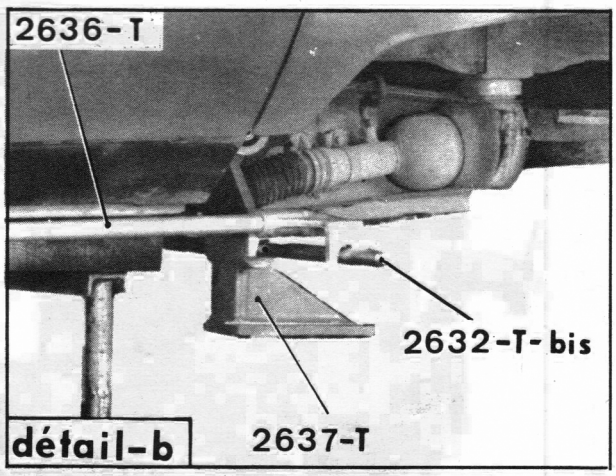

3. Checking for « twists » on the body :

NOTE : This check is to be carried out when checks on the axle unit have not revealed anything unusual.

a) Position the adjustable spirit level A on each of the rods 2632-T bis at the front and rear in succession.

b) Check that the two rods are horizontal to within 0.25 % (e.g. with a 300 mm long spirit level the difference measured with feeler gauges must not exceed 0.75 mm).

4. Check that the axles are parallel :

Offer up gauge rod 2636-T successively on each side of the vehicle.

Position the foot of this gauge on one of the bars 2632-T bis and bring the adjustable end into contact with the bar at the other end of the car. Choose the side where the distance between the two bars is greater, and adjust the end-piece. Compare it with the other side : with the help of feeler gauges, take note of *the difference, which must not exceed 4 mm.*

NOTE : If the results of the last two checks are not correct, you must remove the front and rear axle units in order to be able to carry out the checks on the body jig.

IV - CHECKING A BODY ON A JIG

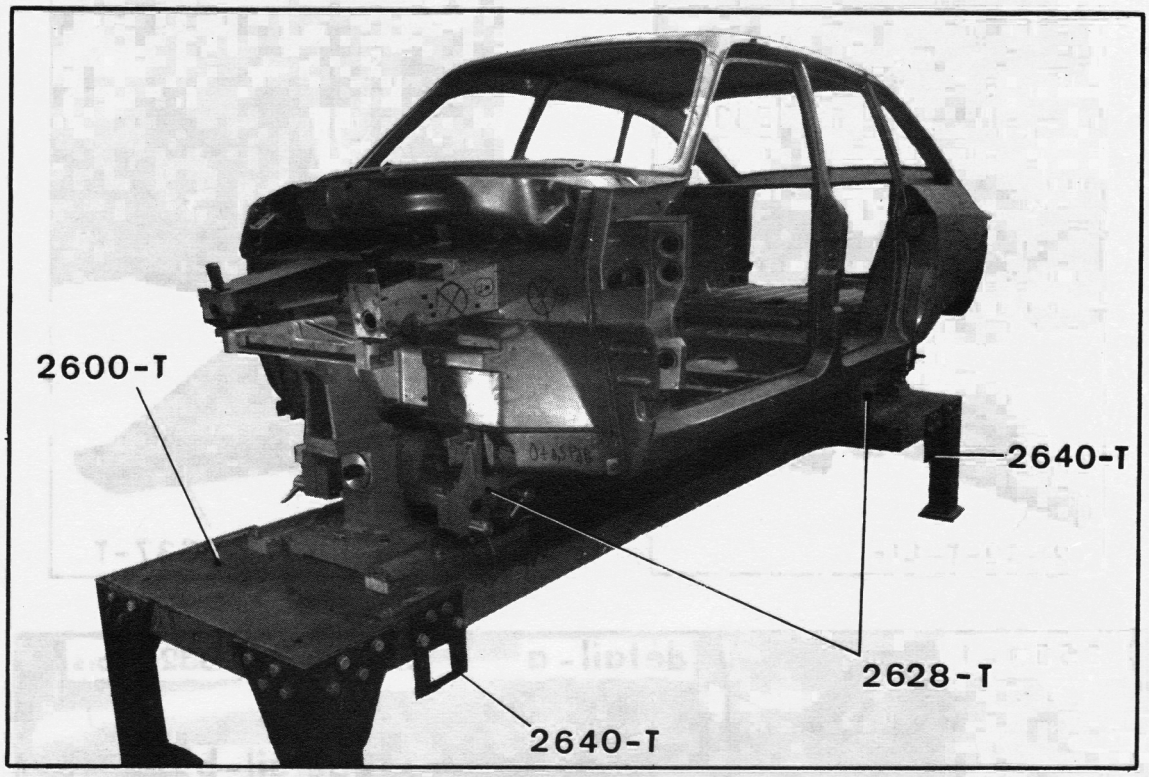

FENWICK : « GS » EQUIPMENT : 2828-T
ON JIG : 2600-T

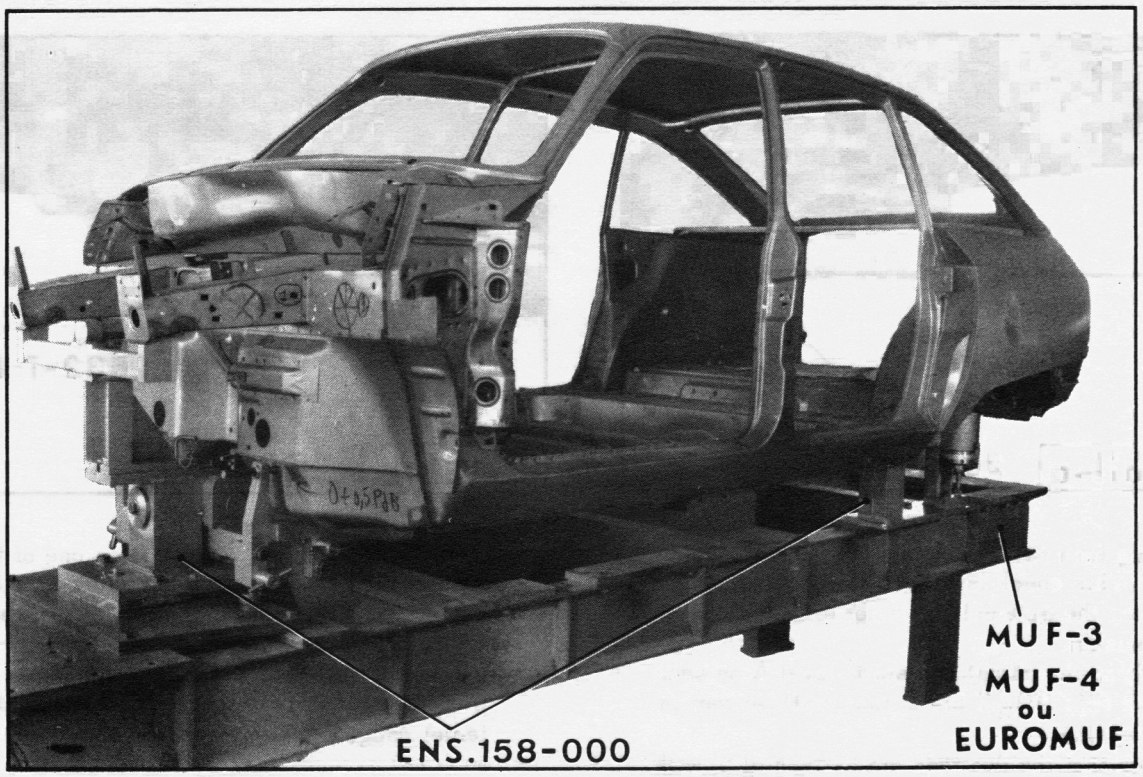

CELETTE : « GS » EQUIPMENT : ENS. 158-000
ON JIG : MUF, 3 MUF 4 or
EUROMUF

FENWICK EQUIPMENT

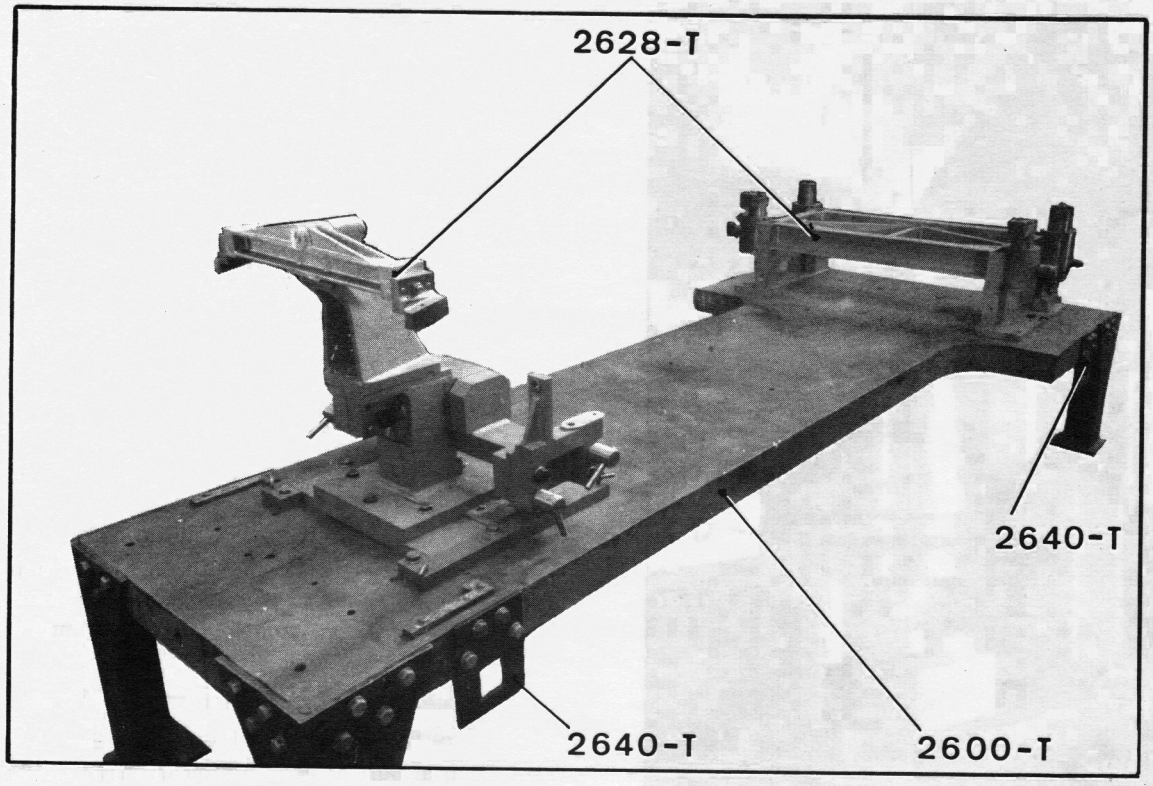

CELETTE EQUIPMENT

10 047

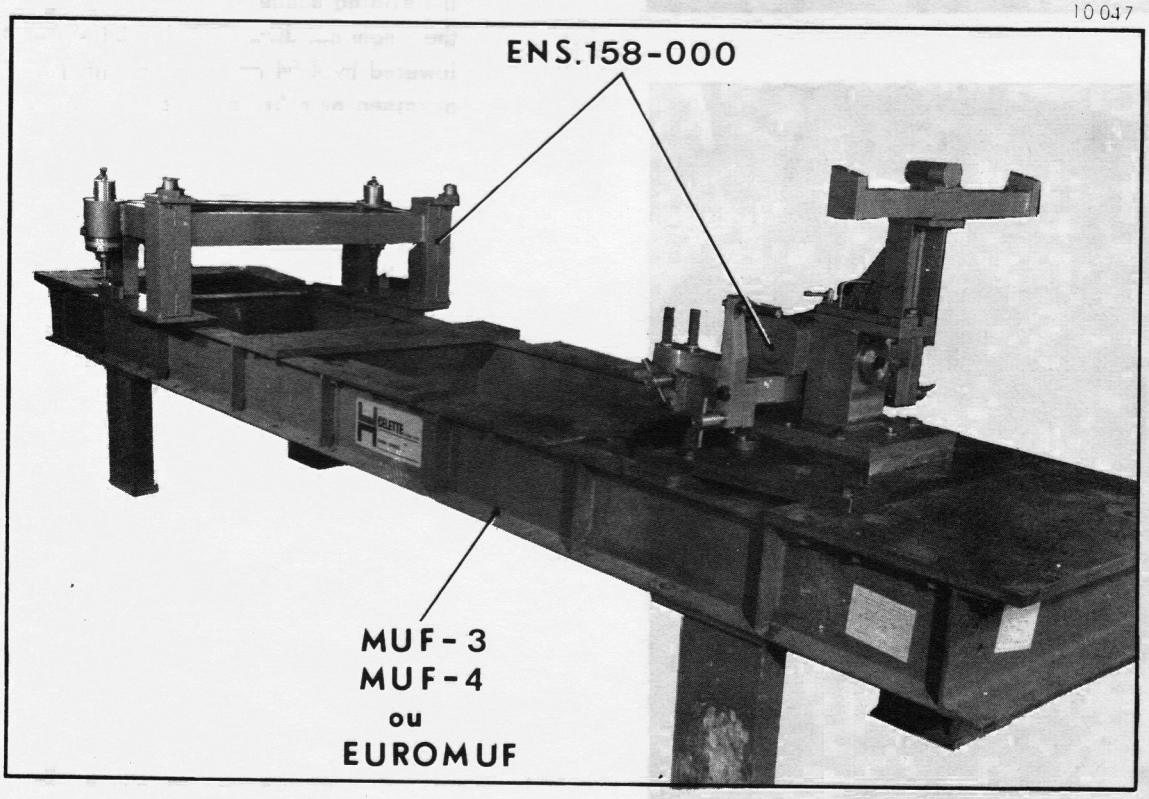

DESCRIPTION

Both sets of equipment are made up of two assemblies (front and rear).
Their construction is such that jacks may be used to straighten the body while it is on the jig.

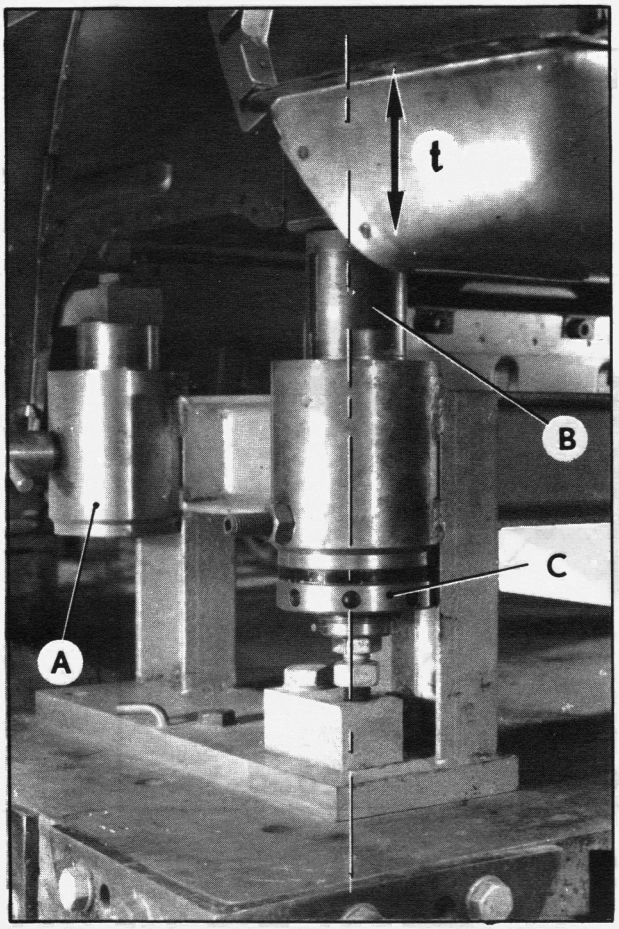

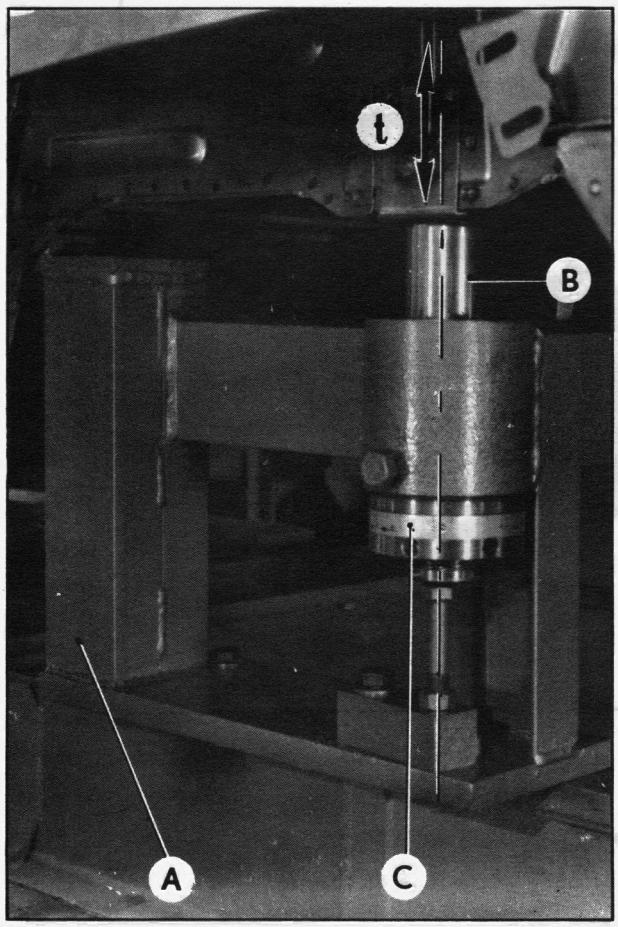

1. Rear assembly :

The body is held in position at four points which are the securing points for the rear axle unit :

- the two front points (bobbins or supports A) are fixed.
- the two rear points (pistons B) can move on a vertical centreline : a sliding gauge C, an integral part of each piston B, allows the position of the rear securing points to be checked within the limits of a permissible tolerance « t ». When the sliding gauge C is at « zero », piston B is at the « nominal dimension » : the piston may be lowered by 4.64 mm (sliding gauge at « - 4.64 ») or raised by 8.64 mm (sliding gauge at « + 8.64 »).

FENWICK

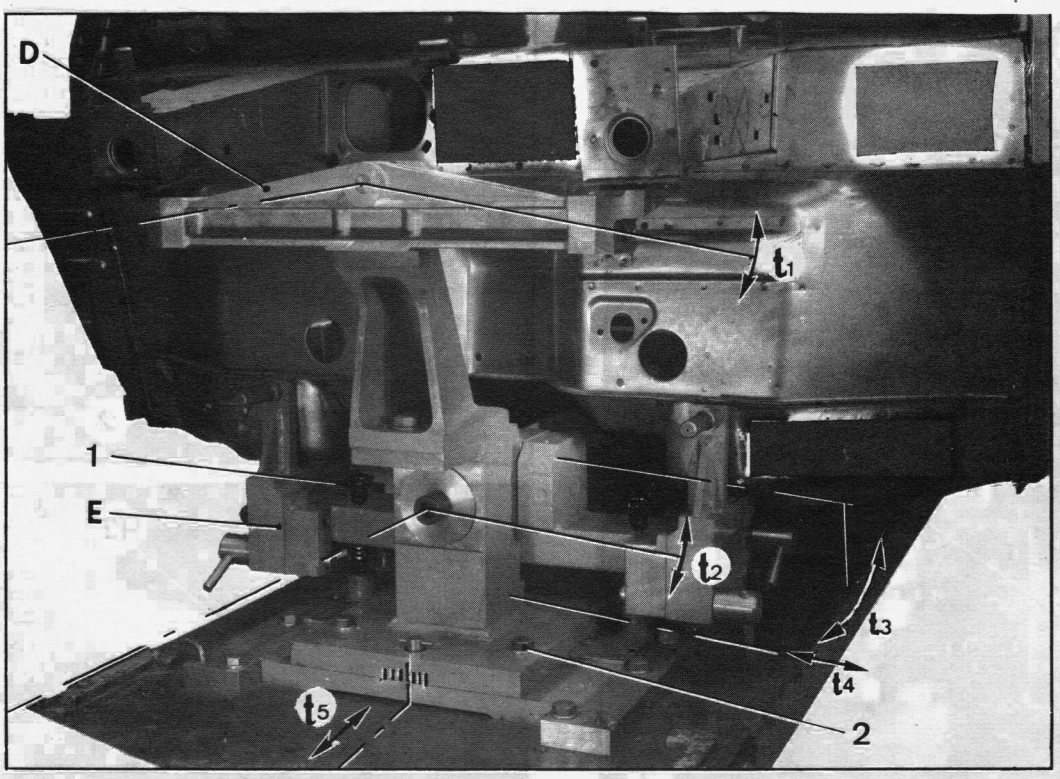

CELETTE

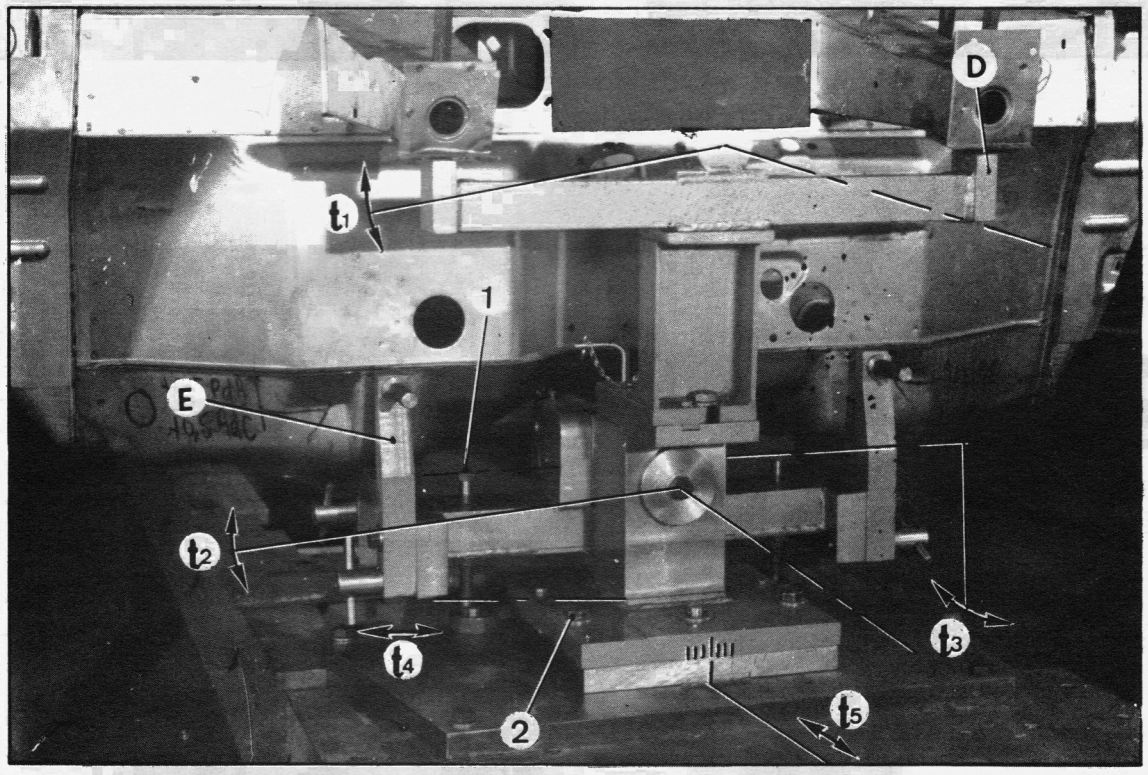

2. Front assembly : The body is located at eight points, which are the securing points of the front axle unit.

This assembly is movable with regard to the body jig and provides for :

- a fore-and-aft tolerance « t5 »,
- a sideways tolerance «t4»,

when the two screws (2) have been slackened.

Two supports on this assembly are movable, which allows in addition :

- for the upper securing points : - tolerance «t1» (transverse rocking of extension support D),
- for the lower securing points : - tolerance «t2» (transverse rocking of lower support E) when the two screws (2) have been entirely slackened)
  - tolerance «t3» (longitudinal rotation of lower support E).

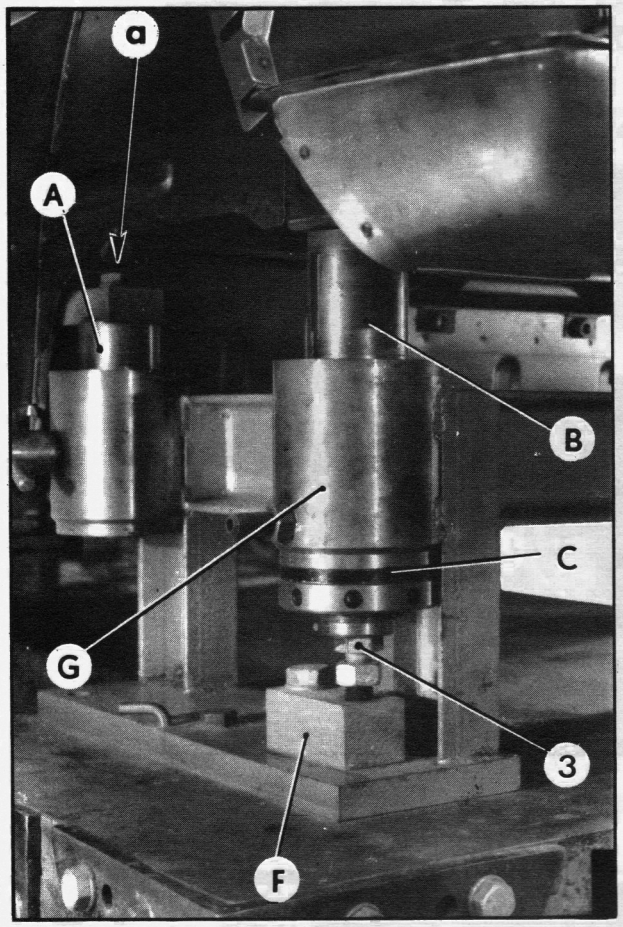

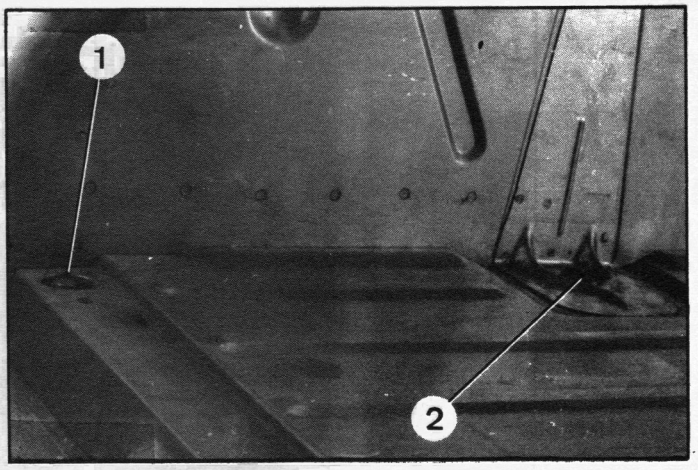

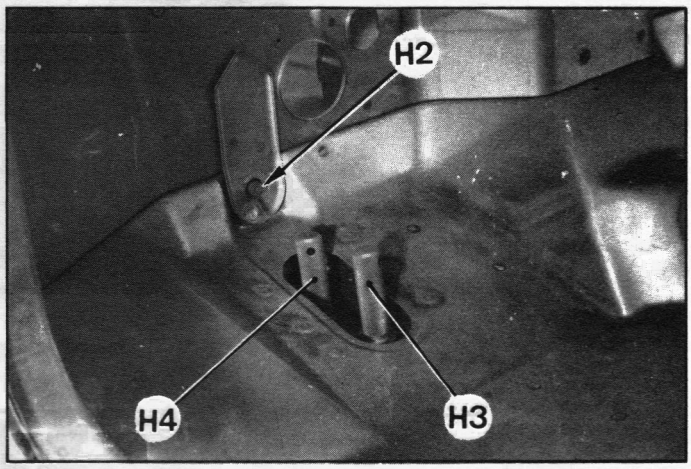

9804

FENWICK

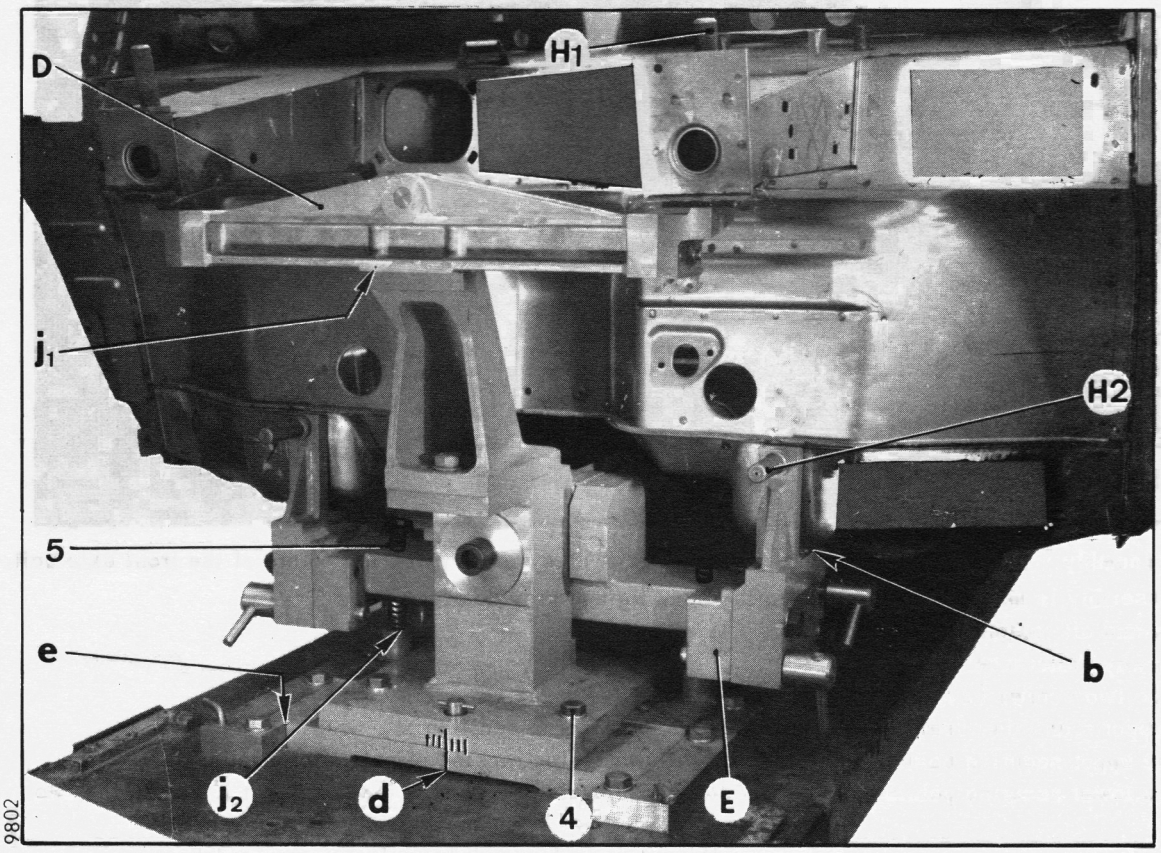

9802

FIRST CASE : Slightly damaged body

1. Check rear securing points :

a) Lower pistons B of rear assembly as far as possible by operating the screws (3).

b) Offer up the body horizontally above the jig :
- Let it rest on the two front bobbins A (or supports) of the rear assembly.
- Engage the body at « a » on the centring dowels of the bobbins. **Do not fit the securing screws.**

c) Rest the body on the front assembly of the jig.

d) On each side of the rear assembly completely slacken sliding-gauge C.

e) *Check :*
- *that the body is in contact with each of the supports of the front assembly at « b ».*
- *that when operating the screw (3), each piston B can be brought INTO CONTACT with the intermediate crossmember : take care not to raise the body at « a ».*
- *that the sliding-gauges C can be tightened until they make contact with cylinders G.*
- *that the difference between the two distances shown by the sliding-gauges C is not greater than 4 mm.*

IF ONE OF THESE CONDITIONS IS NOT FULFILLED, THE BODY IS BUCKLED.

NOTE : Examples of possible readings on the sliding-gauges.
- If one of the gauges shows « - 2 », the other must not have a reading greater than « + 2 ».
- If one of the gauges shows « + 4 » the other must not have a reading less than « 0 », nor greater than « + 8 ».

2. Check the front securing points :

a) Slacken the two stop screws (4).
Slacken the two screws (5) to bring them to the stop in the high position (maximal tolerance «t2 »).

b) On each side, position in order, rods H4, H3, H2 and H1.
NOTE : This rod must be able to be engaged or screwed in *by hand.*

c) Tighten again the two stop screws (4).

d) *Check :*
- *that ALL the H rods can be removed BY HAND*
- *that the clearance read at « j2» (on the right or on the left) is not more than FIVE TIMES the value read at « j1» on the same side.*

IF ONE OF THESE CONDITIONS IS NOT FULFILLED, THE BODY IS BUCKLED.

NOTE : **Never jack a body while it is held in position on support D of the extensions.**

SECOND CASE : Body damaged at the front

1. Fix the body on the rear assembly

a) Lower pistons B of rear assembly as far as possible by operating the screws (3).

b) Offer up the body horizontally above the jig :
- Let it rest on the two front bobbins A (or supports) of the rear assembly.
- Engage the body at « a » on the centring dowel pins of the bobbins.

c) Rest the body on the front assembly of the body jig.

d) Raise pistons B (screws (3)) to the «nominal distance »(sliding gauge at «zero»).

e) Fit the two screws at (1) and the two at (2).

2. Place the front assembly at the «nominal distance» :

a) Remove the support D from the extensions. If necessary, remove one of the «brackets» of support E from the side on which the force is to be exerted.
Slacken the two stop screws (4).
NOTE : **Never «jack » a body while it is held in position on support D of the extensions.**

b) Locate the front assembly in the « middle » position of all the permissible clearances :
- *Side clearance « t4»:* the «zero» of the sliding-gauge at « d » must be in line with the fixed mark.
- *Longitudinal clearance « t5» :* on FENWICK body jig : position a 2 mm thick shim at each side at « e » on CELETTE body jig : the corresponding sliding-gauge must be in the «zero» position.
- *Rocking tolerance « t2» of lower support E :*
Slacken fully the two screws at (5).
Position a 2.7 mm thick shim at «j2» under one of the screws (5) and tighten the other in such a way to take up the remaining rocking clearance.
Withdraw the 2 mm thick shim and tighten this screw to take up the remaining rocking clearance of support E.
Tighten the two screws (4).

3. Straighten the body : « Jack » it until you can insert *in order* rods H4, H3 and H2 corresponding to the bracket which is still in position.
NOTE : The rods must be able to be inserted *by hand.*

4. Fix the bracket which has been removed.
Follow the instructions in paragraph 3 above.

5. Fit the support D for the extensions.
Check the extensions using rods H1.
Proceed as indicated in § 2d for the first case.

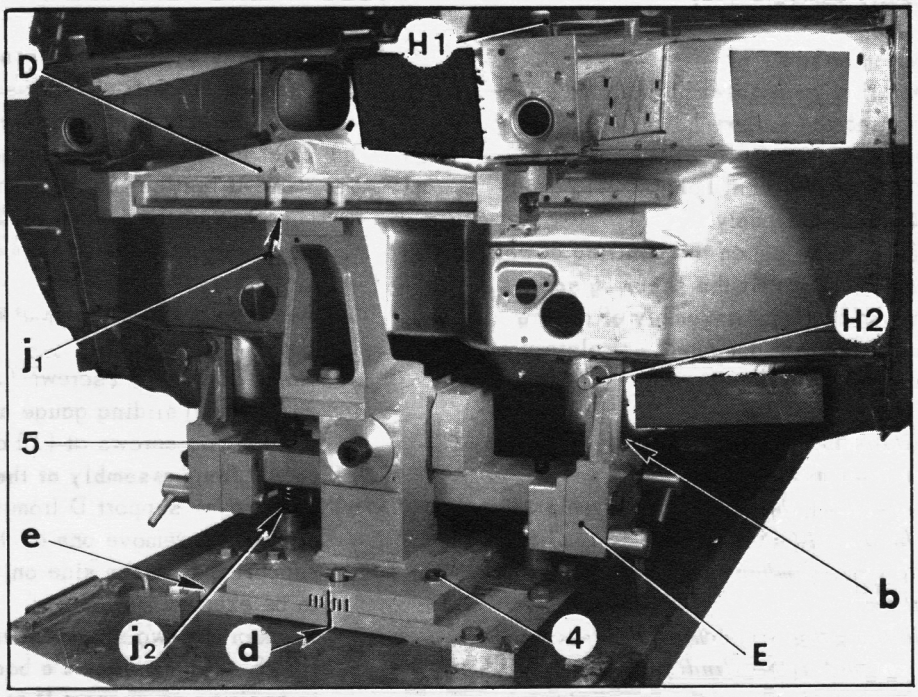

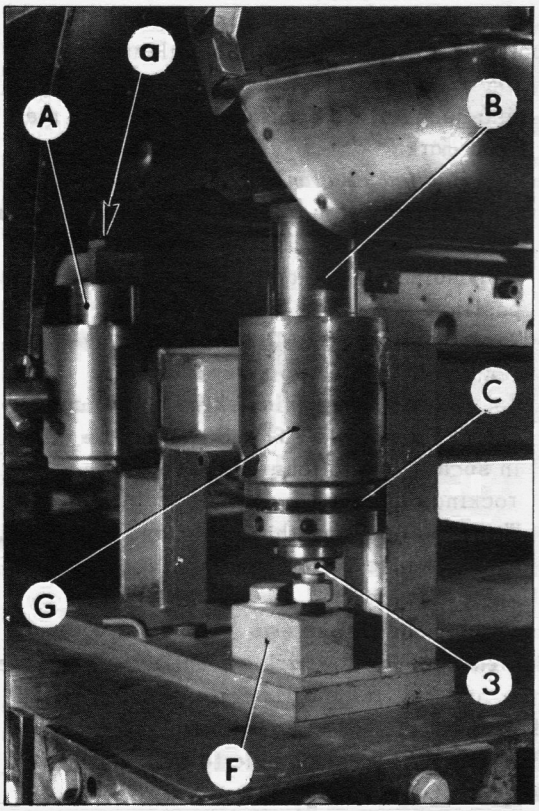

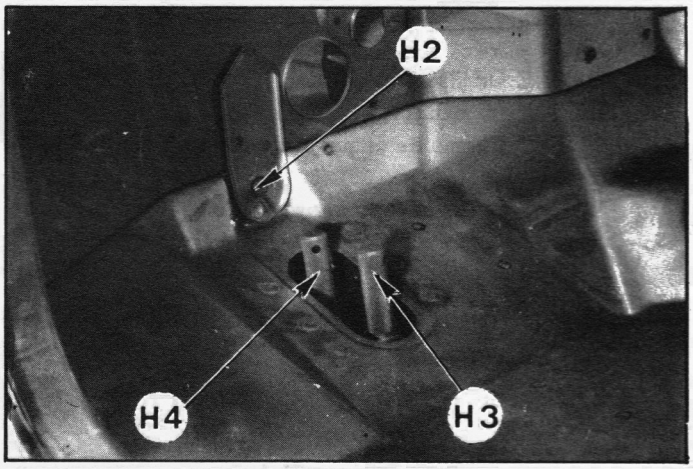

THIRD CASE : Body damaged at the rear :

1. **Position the front assembly at the « nominal distance » :**
   Proceed as indicated in § 2 b of the second case.

2. **Hold the body on the lower support of the front assembly with rods.**

On each side, position rods H4, H3 and H2 in order.
NOTE : These rods must be able to be inserted by hand.
Check the extensions using rods H1, proceeding as indicated in § 2 d for the first case.
Withdraw the rods after the check.

3. **Free the rear securing points :**
   Pivot shims F, and lower pistons B as far as possible.

4. **Straighten the body :** « Jack » it until you can check the rear securing points as indicated in § 1 on the first case.

V - CHECKING THE DIMENSIONS OF A BODY

The basic diagram below is only a guide.

In no circumstances can it be used as a reference when re-assembling a body.

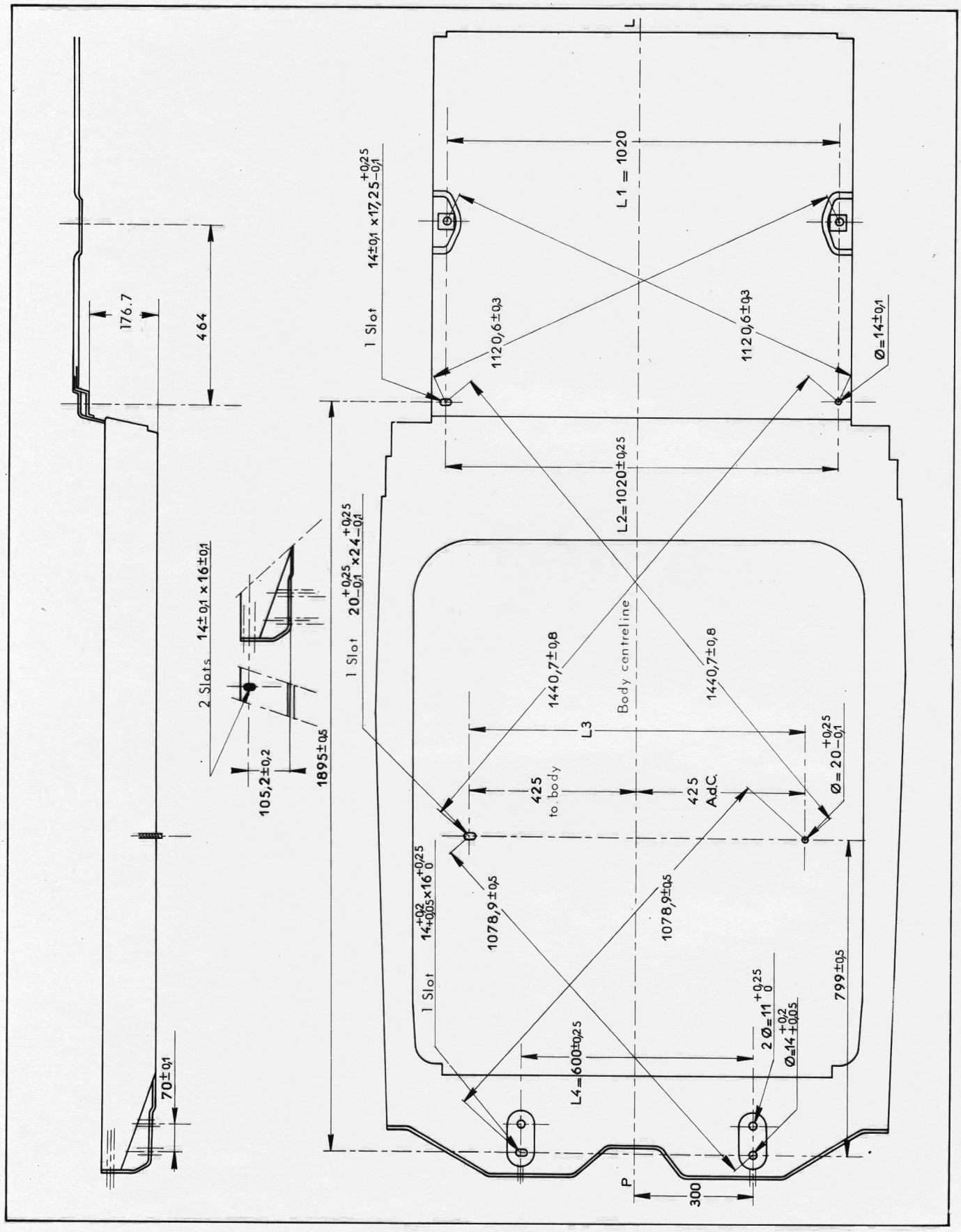

REPLACING A TRIPLEX WINDSCREEN

NOTE : Whenever work is carried out on a windscreen , under no circumstances must metal tools such as, (screw-drivers, hooks etc...) be used, as these would scratch the glass and damage the rubber sealing strip and trimmings. Use the tapered down end of a piece of hard wood to replace these tools.

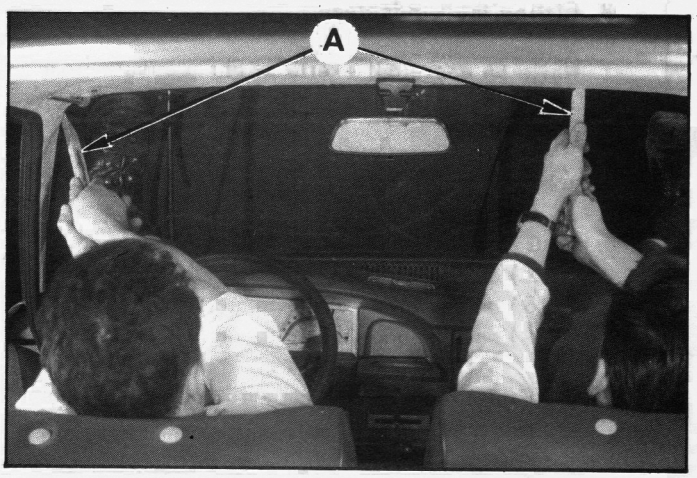

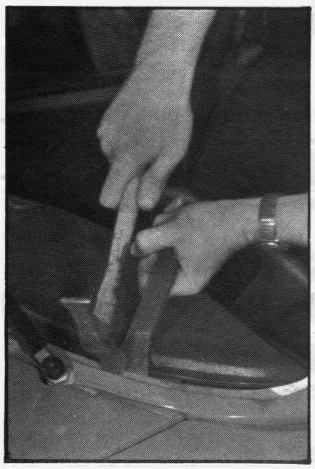

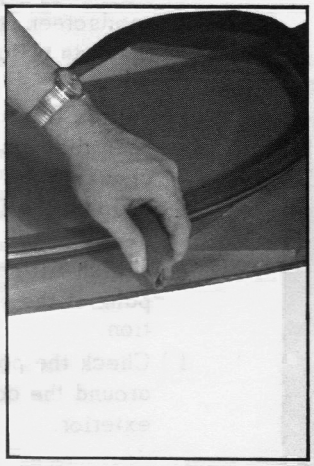

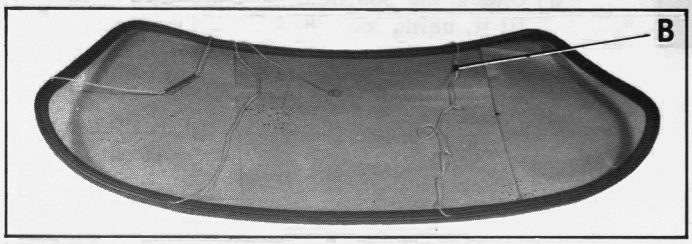

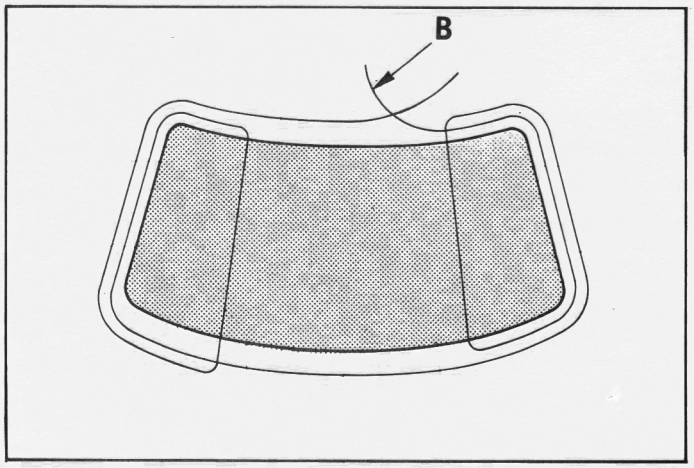

REMOVAL

1. Raise the windscreen wiper blades

2. Removing the windscreen glass and its rubber sealing strip :

With the help of an assistant, sit in the vehicle, and place one foot on the windscreen and apply slight pressure. Assist the disengagement of the sealing using the tapered down end A of the piece of wood, starting at the two upper angles Continue to disengage it along the upper part of the windscreen.
Disengage the windscreen from its frame with the rubber sealing strip and its setting strip.

PREPARATION

3. Checking the windscreen frame :

If necessary, straighten out any deformations of the windscreen frame, file down any spot welds. Carefully stick down the roof trimmings. Check the curve around the windscreen frame (use the glass as a guide). Rectify the frame if necessary.

4. Checking the windscreen glass :

a) The contour must not have any rough edges if this is so, rub down with sandpaper 260 and water, proceed by small quick strokes, perpendicular to these, by hollowing and rounding off the edges. Wash with water, and rub down carefully.

b) Look for any visibility defects.

5. Fitting the rubber sealing strip on the glass :

Smear the sealing channels with liquid soap, fit it on the glass, place the abuting joint on the lower part of the windscreen, and in the centre-line of the vehicle.
Fit the rubber sealing setting strip using tool 3814-T with its abuting joint on the upper part of the windscreen, and in the centre-line of the vehicle.

6. Insert a piece of cord B 4 mm in diameter, in the groove of the rubber sealing, as shown in the diagram opposite.
NOTE : The double turn of the cord in the side pillars, allows, the glass when fitting to keep its complete flexibility, thus avoiding, due to its double turn, the use of a hook, in the case where the rubber sealing might have been badly positioned during the first turn of the cord

G. 96-2

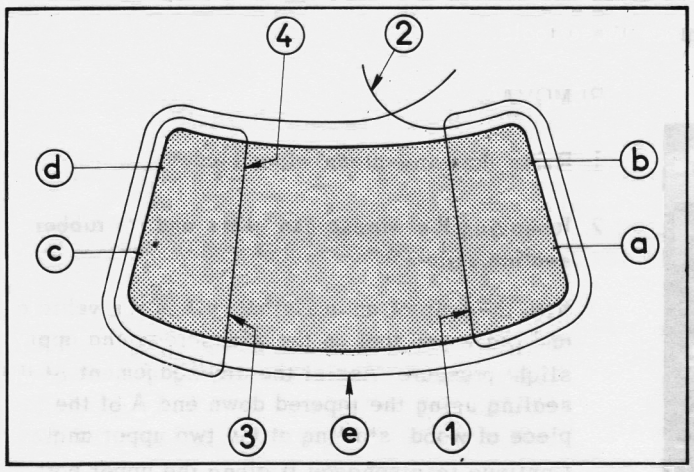

12 903

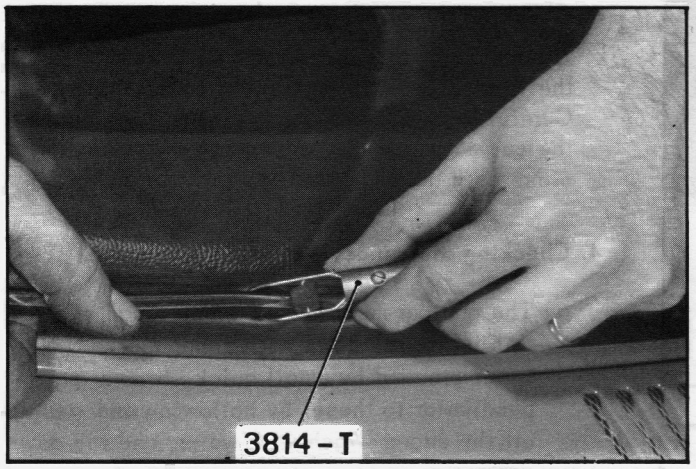

FITTING

7. Offer up the windscreen to the frame, check from interior, its centre-line position.

8. Fitting the windscreen :

While an assistant exerts slight pressure from the exterior towards the interior, disengage the cord.

a) Pull on the cord, parallel to the glass in the following manner :
1) on the loop (1) up to « a »
2) on the end (2) up to « b »
3) on the loop (3) up to « c »
4) on the loop (4) up to « d »

b) Finish each side from « a » to « b » and « c » to « d ».

c) Exert slight pressure at the centre of the windscreen, to allow it to fit properly in the side pillars.

d) Pull on the cord (the interior part having already been disengaged) go round the windscreen, checking the positioning of the rubber sealing strip on the frame at the lower area « e ».

e) Finish fitting by tapping on the sealing with the palm of the hand, to ensure its final fitting position.

f) Check the positioning of the rubber sealing around the contour of the frame interior and exterior.

g) Check the positioning of the setting strip, and fit it, using tool 3814-T, if necessary.

REPLACING A SIDE WINDOW

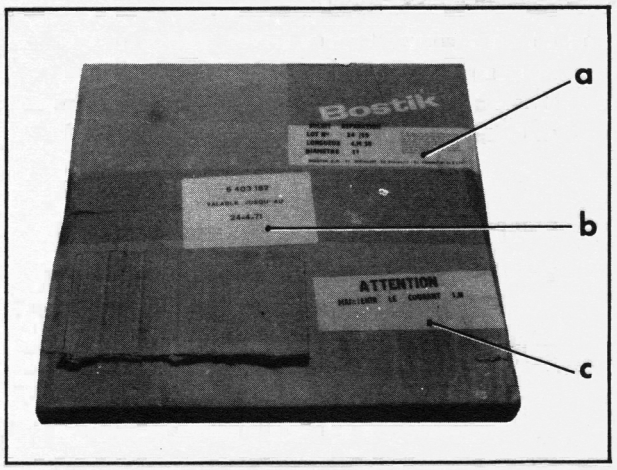

9417

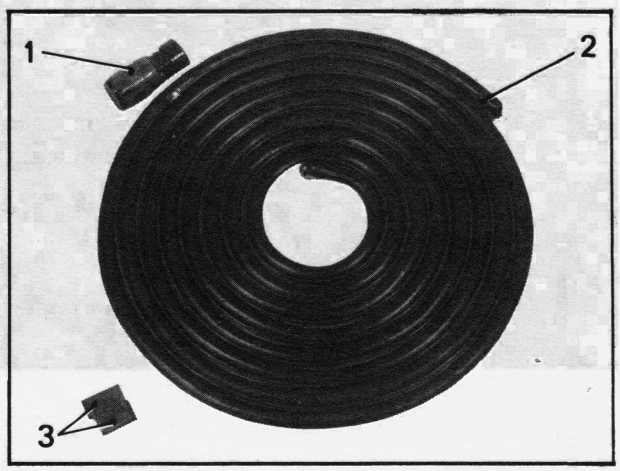

Manual 810-2

PRODUCT USED

The product used for bonding a side window is an extruded neoprene strip containing a vulcanizing agent and built-in electrical resistor.
Vulcanization is achieved by passing an electrical current (see chapter MATERIAL USED paragraph b).
This product, manufactured by BOSTIK Company, is called SOLBIT.
It is available in two grades :

a) One, for manufacturing purposes, has a shelf life of only five weeks at ambient temperature, or for an unlimited period below 0° C.

b) The other, for repair purposes, has a shelf life or six months at ambient temperature.
The repair strip is sold by the Replacement Parts Department in cardboard cartons.
The three labels on the boxes indicate respectively :
Label « a » : the physical properties of the product (length, diameter, production date, etc..).
Label « b » : the Replacement Parts number and the date after which it must not be used.
Label « c » : vulcanizing time to be observed during fitting (one hour).
Inside the box there is :
- A SOLBIT strip (2) - A bottle (1) of primary liquid - 2 rubber blocks (3) - A strand of piano wire about 0.60 meter long - An instruction sheet.

EQUIPMENT USED.

a) **Standard tools :**
- Philips screwdriver
- A hammer
- A dolly
- A roll of adhesive paper
- Three lengths of piano wire (diameter 0.6 mm-length = 500 mm).

b) **Special tools :**
- A set of three straps 3822-T
- Two handles 3905-T
- A transformer delivering 27 V ± 1.5 V from voltages of 220 or 380 V ± 20 V.
- Two electric leads (cross-section = 4 mm2 length = 2.5 mm) (connection between transformer output and the SOLBIT strip).

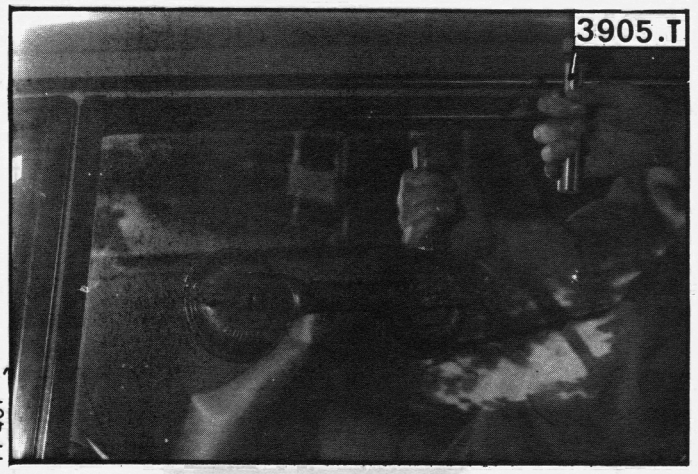

11 461

REMOVAL

1. Clean the outside face of the glass with alcohol and position the handling suction cups.

2. **Remove the side window :**

a) Using a cranked screwdriver perforate the SOLBIT strip to allow insertion of a piano wire (dia. = 6 mm, length = 500 mm) between the window glass and the rabbet.

Fit the handles 3905-T on each end of this piano wire.

By alternately pulling and pushing, split the SOLBIT strip right round the periphery of the window.

NOTE :

The side window having been removed with its trim, use a spatula to raise the trim at each corner so that its base, embedded in the SOLBIT, will in no way interfere with the piano wire.

Carefully cut out the SOLBIT strip at the bottom of the glass to avoid damage to the side trim that covers the rabbet.

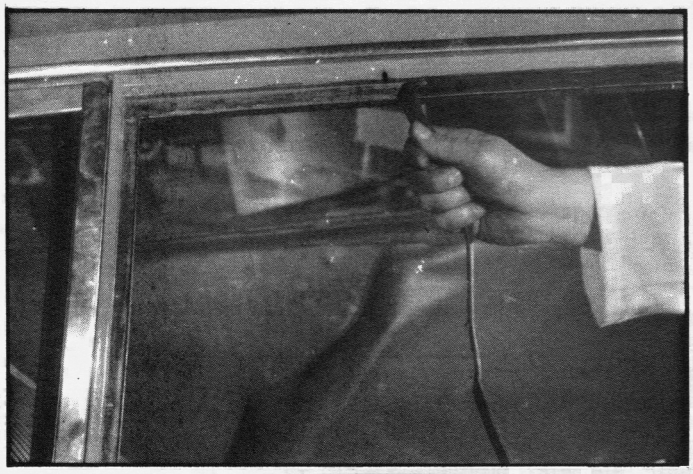

11 465

b) Remove the side glass with its trim.

PREPARATION

3. Remove the side window trimmings.

4. With a blade, remove the traces of SOLBIT adhering to :
- the glass,
- the rabbet,
- the trim.

NOTE : It is not necessary to completely strip the glass and the bottom of the rabbet, since the new SOLBIT adheres perfectly to the old. However it is best to avoid too much excess thickness (rub them down if necessary).

FITTING

5. Place the glass in its rabbet.
The clearance between the rabbet and the glass should not exceed 4 mm.
If necessary, once more drive out the bottom of the rabbet to obtain this condition.
Place the two rubber blocks at the bottom of the glass (stick them if necessary).

6. Carefully clean with alcohol :

- the rabbet,
- the periphery of the glass (inside face),
- the trim surround.

9510

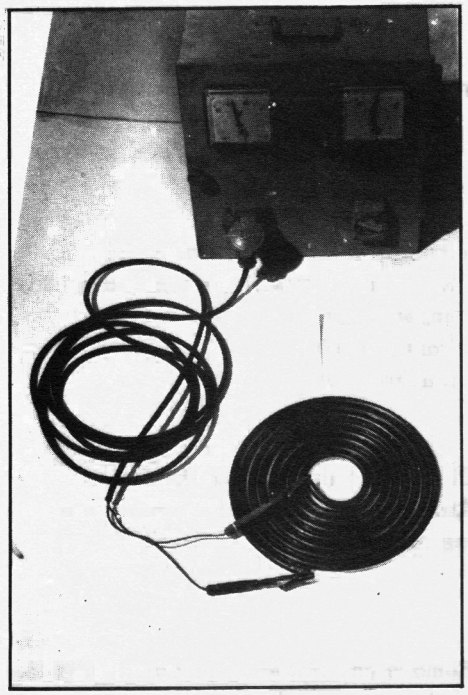

11 467

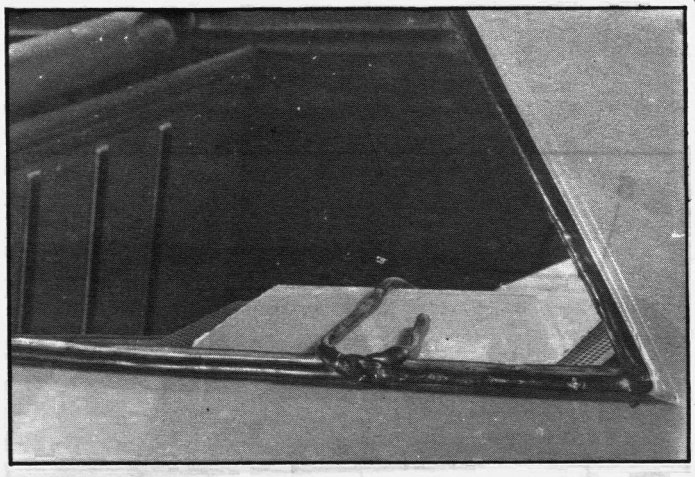

7. Using a thin paint brush, smear primary liquid on :
   - the rabbet,
   - the inner face of the glass along its entire periphery for a width of about 20 mm.

11 468

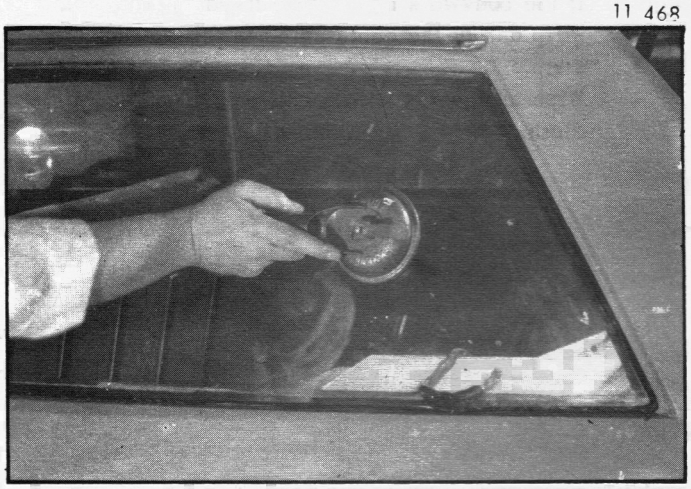

8. **Preheat the SOLBIT strip :**
   Connect up the ends of the resistor to the current source.
   Disconnect the resistor when the SOLBIT is soft and slightly sticky.
   (Continue surveillance - maximum time : three minutes).

9. **Fit the SOLBIT strip :**
   Fit the SOLBIT strip in the rabbet (Protect the inner boot trim from contact with the SOLBIT)
   Cross the ends of the SOLBIT strip at the rear bottom corner of the window opening.
   Hang the ends inside.
   Crush the joint, so as to avoid extra thickness of the SOLBIT strip.

11 469

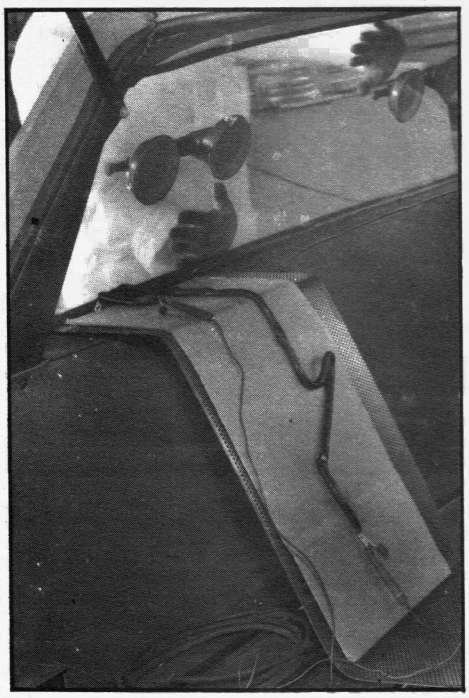

10. **Fit the glass :**
    Position the glass in its rabbet.
    It should rest on the two rubber blocks at the bottom.

11. **Heat the SOLBIT strip :**
    Connect the end of the SOLBIT strip to the current source.

12. Press all around the glass so that it takes up its final position and to allow the SOLBIT strip to flow in between the glass and the rabbet.
    Remove the rubber blocks fitted in paragraph 5.

IMPORTANT : **Let the SOLBIT strip heat for an hour. This time is essential for perfect vulcanization of the strip.**

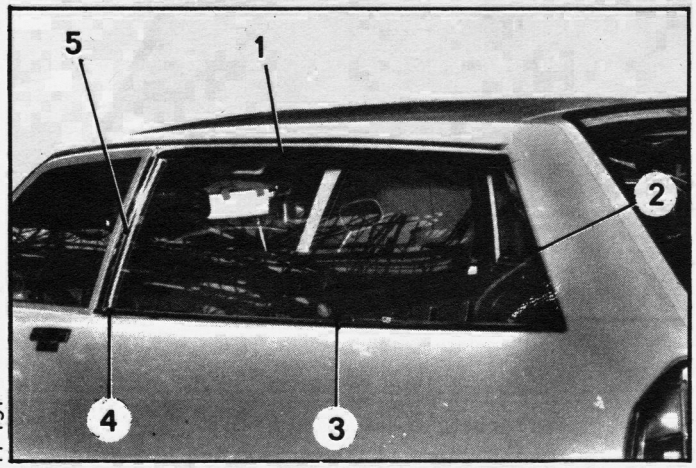

11 151

13. Fit the trim :

Proceed with the fitting while the SOLBIT strip is vulcanizing.

Fit the trim in the following order :
- lower trim (3) with its end-piece (4),
- upper trim (1),
- front trim (5),
- rear trim (2).

14. Disconnect the ends of the strip.
After cooling, press the ends of the strip against the rabbet.

15. Remove any traces of primary liquid from the glass using alcohol.
If the bodywork has been marked by the SOLBIT strip dab at the spots using the free ends of the strip.
Wipe afterwards with a soft petrol-impregnated cloth.

REPLACING A REAR WINDOW



REMOVAL

1. *Case of an electrically-heated window :* disconnect the supply leads.

2. Lie on the rear seat with feet flat against a corner of the glass near the rubber sealing. Push on the glass until it is completely free.

3. Remove the sealing compound and carefully clean the rabbet of the opening.

4. Remove the glass sealing rubber.

5. Remove the seal trim *(on certain CLUB vehicles).*

9539



FITTING

6. Prepare the opening :
Carefully clean the rabbet.
Spread the sealing compound over a length of about 5 cm at the bottom two corners of the opening.
In the case of an electrically-heated window :
spread the compound in the same way at the height of the supply leads.

7. Fit the rubber sealing on the rear window glass.

8. Fitting the seal trim *on certain CLUB vehicles) :*
Fit a small cord into the relevant groove of the rubber seal.
Fit the two parts of the trim while pulling on the cord.
Fit the seal cover.

9. Fit a small cord (dia. = 4 mm) smeared with soapy water, in the groove of the rubber. The ends of the cord must cross themselves in the middle of the lower portion of the glass.

10. Fit the glass in the opening with the ends of the cord towards the inside of the vehicle.

11. Press hard on the outside of the glass as close as possible to the rubber seal while an assistant inside the car draws on one of the cord ends (this serves to raise the inner lip of the rubber seal and allows the latter to be fitted on the rabbet). Continue to press all around the glass while removing the cord.

12. Complete fitting by tapping with a rubber mallet on the outside of the glass, all around it and as close as possible to the rubber seal.

I. REPLACING A « BONDED » TAILGATE WINDOW

PRODUCT USED

9417

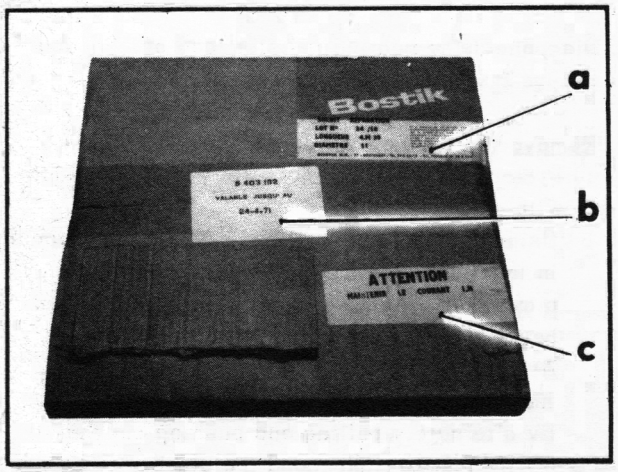

9283

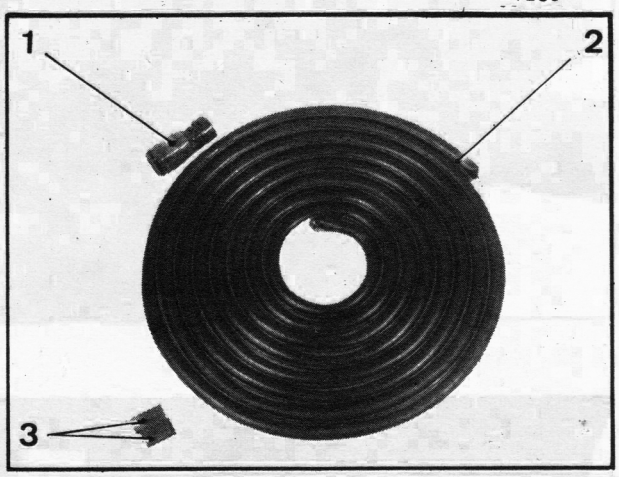

The product used for bonding tailgate windows is an extruded neoprene strip containing a vulcanizing agent and a built-in electrical resistor.

The vulcanization is achieved by passing an electrical current (see chapter MATERIAL USED paragraph b). This product, made by the BOSTIK Company, is called SOLBIT.

The product comes in two grades :

a) The first, for manufacturing purposes, has a shelf life of five weeks at ambient temperature or an unlimited life below 0° C.

b) The second, used for repair purposes, has a shelf life of six months at ambient temperature.
The repair strip is sold by the Replacement Parts Department in cardboard cartons.
The three labels on the carton indicate respectively :
Label « a » : the physical properties of the product (length, diameter, production date, etc..).
Label « b » : the Replacement Parts number and the final date of **use which must never be exceeded.**
Label « c » : the vulcanizing time to be observed when fitting (one hour)
Inside the carton there is :
- A strip of SOLBIT (2) - A bottle (flask) of primary liquid - Two rubber blocks (3) - A length of piano wire about 0.60 meter in legth - An instruction notice

EQUIPMENT USED

a) **Standard tools**

- Philips screwdriver
- A hammer.
- A dolly
- A roll of adhesive paper
- Three lengths of piano wire (dia. = 0.6 mm - length = 500 mm).

b) **Special tools**

- A set of three straps 3822-T
- Two handles 3905-T
- A transformer giving 27 V ± 1.5 V from voltages of 220 V or 380 V ± 20 V.
- Two electrical leads (cross-section = 4 mm^2 length = 2.5 m) (connection between the transformer output and the SOLBIT strip).

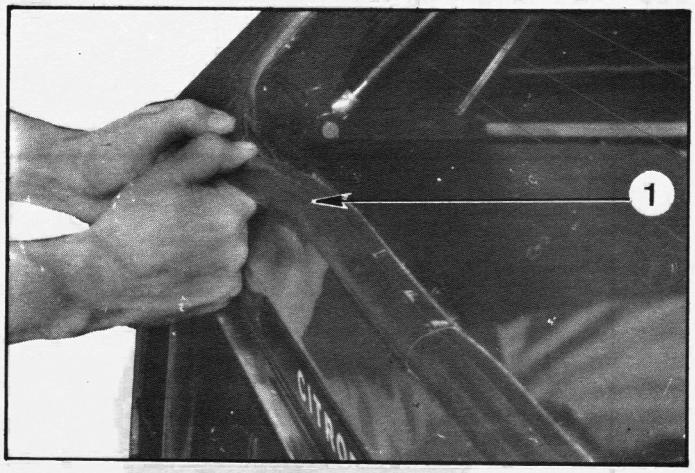

REMOVAL

1. Remove the finish rubber.
Pull hard to free it from the glass.
Do not re-use this rubber.

2. Disconnect the heating resistor lead at « a » and remove the bolt (2) holding the earth wire.

3. **Remove the tailgate window :**
a) Protect the paint on the outside of the tailgate with adhesive paper.
b) Using cranked screwdriver, make a small opening in the SOLBIT strip to allow insertion of a piano wire (dia. = 0.6 mm - length = 500 mm) between the glass and the rabbet.
At each end of this piano wire fit the 3905-T handles.
By alternately pulling and pushing cut the SOLBIT strip right round the glass.

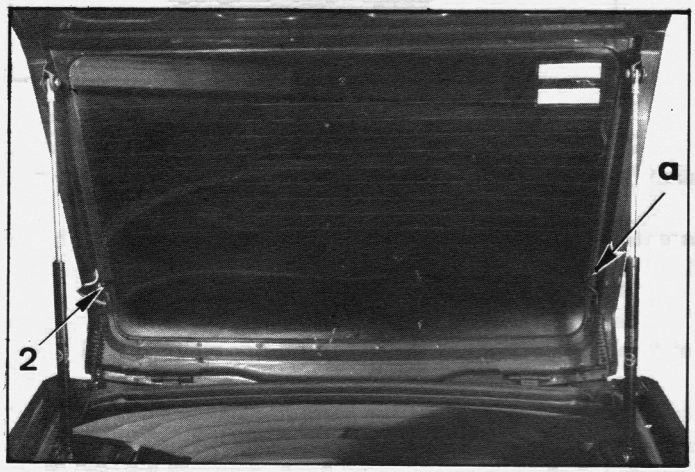

c) Remove the tailgate window glass.
The use of suction cups will facilitate this operation.

PREPARATION

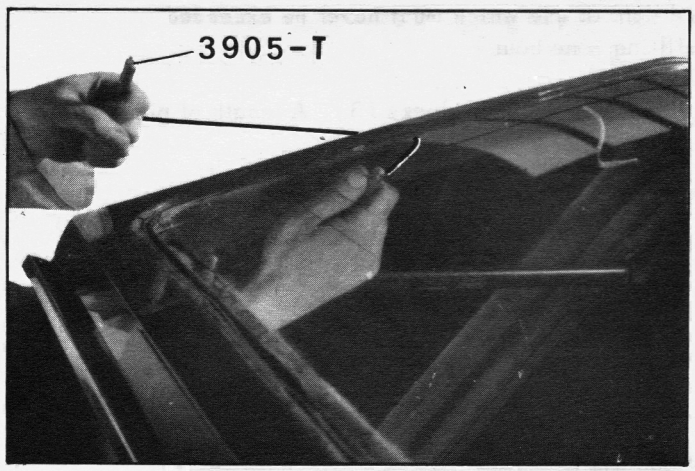

4. Using a knife, remove any traces of the SOLBIT strip adhering to the glass and rabbet.

If necessary, rub down the window rabbet.

NOTE : It is necessary to strip the glass and the steel completely since the new SOLBIT adheres perfectly to the old. However it is wise to avoid too much extra thickness (rub them down if necessary).

5. Fit the new finish rubber on the tailgate glass, stick it if need be.

6 Carefully clean with alcohol :
- the rabbet,
- the periphery of the glass and the rubber (bonding area).

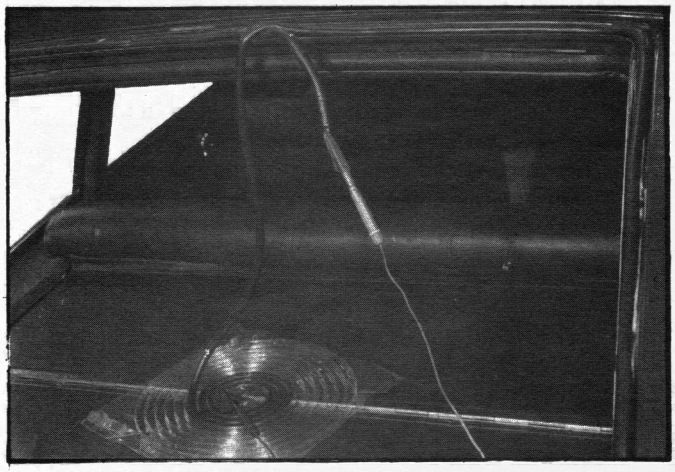

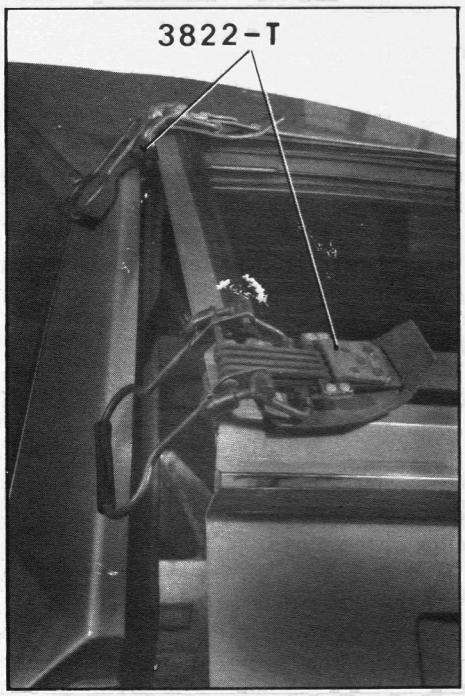

FITTING

7. Using a thin paint brush, apply primary liquid to :
   - the rabbet,
   - the inner face of the glass along its entire periphery over a width of about 20 mm.
   - the finish rubber.
8. **Preheat the SOLBIT strip :**
   Connect the ends of the resistor to a 24 volt current source.
   Disconnect the resistor when the SOLBIT is soft and slightly sticky.
   (continue surveillance, maximum time = three minutes).
9. Fit the SOLBIT strip in the rabbet, crossing its ends at the top at the centreline of the body.
   Hang the ends inside.
   Press down the junction to avoid too great a thickness of SOLBIT.
   Do not cut the SOLBIT strip to length.

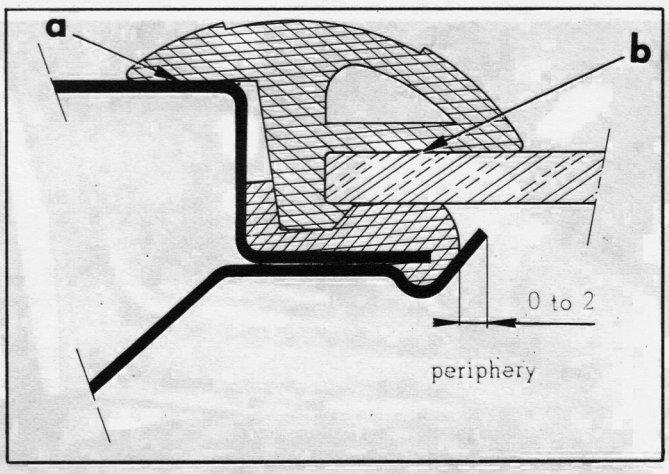

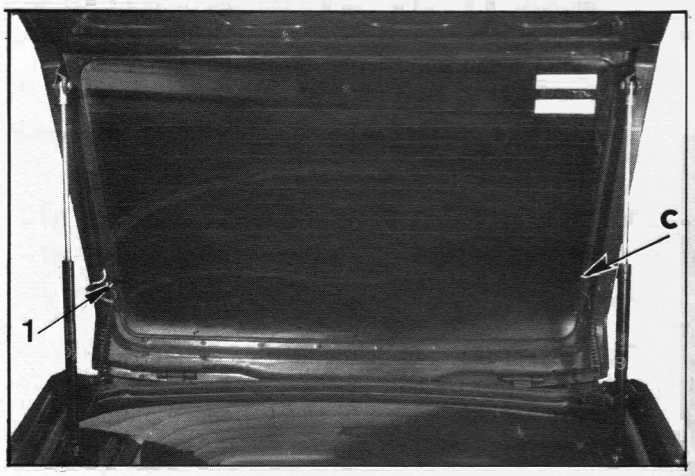

10. **Fit the glass :**
    Fit the glass with its finish rubber on the SOLBIT strip.
11. **Heat the SOLBIT :**
    Connect the ends of the SOLBIT strip to a 24 volt current source.
12. Press around the glass so that the glass assumes its definitive position and allow the strip to flow between the glass and the rabbet.
    Check that the finish rubber lies flat along the centre periphery at « a » on the rabbet and « b » on the glass.

IMPORTANT : **Let the strip heat for an hour. This time is essential to obtain perfect vulcanization of the strip.**

13. Disconnect the ends of the strip.
    Remove the two 3822-T straps.
    After cooling, the ends of the strip against the rabbet.
14. Use alcohol to remove all traces of primary liquid from the glass.
    If the bodywork has been marked by the SOLBIT strip, dab the spots with the free ends of the strip.
    Then, wipe with a soft petrol-impregnated cloth.
15. Connect the lead to the heating resistor at « c » and fit the bolt (1) holding the earth wire.

II. REPLACING A « SET-IN » TAILGATE WINDOW

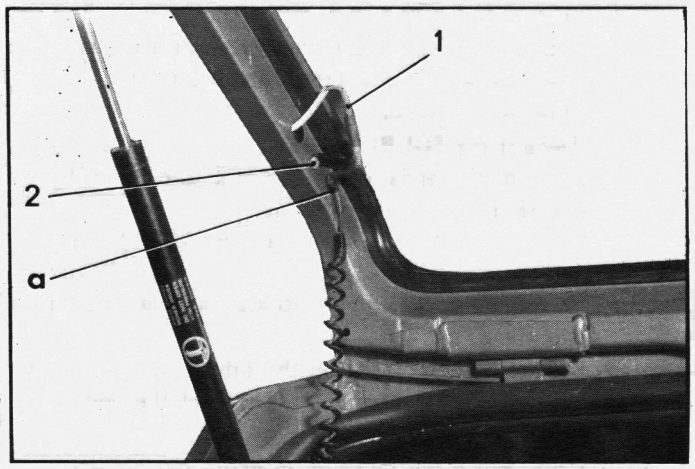

11 545

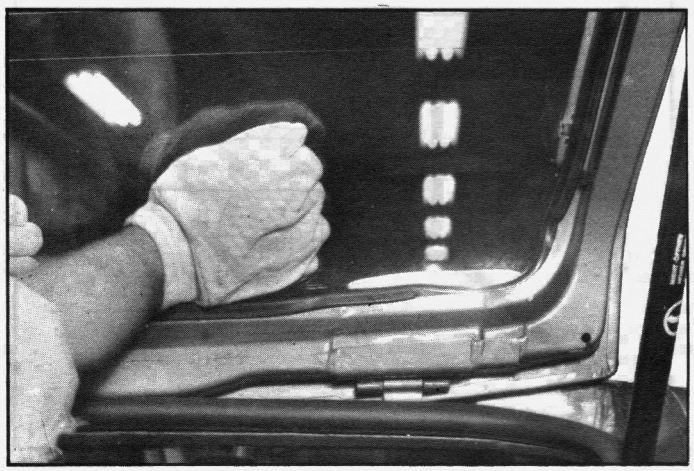



REMOVAL.

1. Disconnect the heating resistor lead and remove the earth wire bolt (2).
   Disconnect the lead (1) from the licence plate light and unfasten the conductors at « a » on each side of the tailgate window.

2. Using a spreader release the upper corners of the sealing rubber.
   Press on the glass to facilitate the passage of the rubber seal lip.
   End the removal while releasing completely the glass from the tailgate.

3. Remove the rubber sealing strip.

PREPARATION.

4. Remove the sealing compound and carefully clean the tailgate rabbet.
   If necessary, file down any welding ridges.
   If necessary, rub down the rabbet.

5. At each corner, fit a pellet of new compound drawn out to a length of about 50 mm.

FITTING.

6. Fit the tailgate window glass into its rubber seal.

7. Fit a small cord (dia. = 4 mm). smeared with soapy water, into the groove of the rubber seal. The ends of the cord should cross at the centre of the bottom of the glass.

8. Place the glass thus fitted into its opening with the cord ends towards the inside of the vehicle.

9. Press hard on the outside of the glass as close as possible to the rubber seal while an assistant inside draws on one of the cord ends (this serves to raise the inner lip of the rubber and allows the latter to be fitted on the rabbet.
   Continue to press all around the glass and remove the cord.

10. Complete fitting by tapping with a rubber mallet on the outside of the glass, all around it and as close as possible to the rubber seal.

11. Connect the lead of the heating resistor and fit the earth wire bolt (2).
    Connect the leads (1) of the licence plate light and fasten on the tailgate at « a » (on each side).

MR. 630_84/14

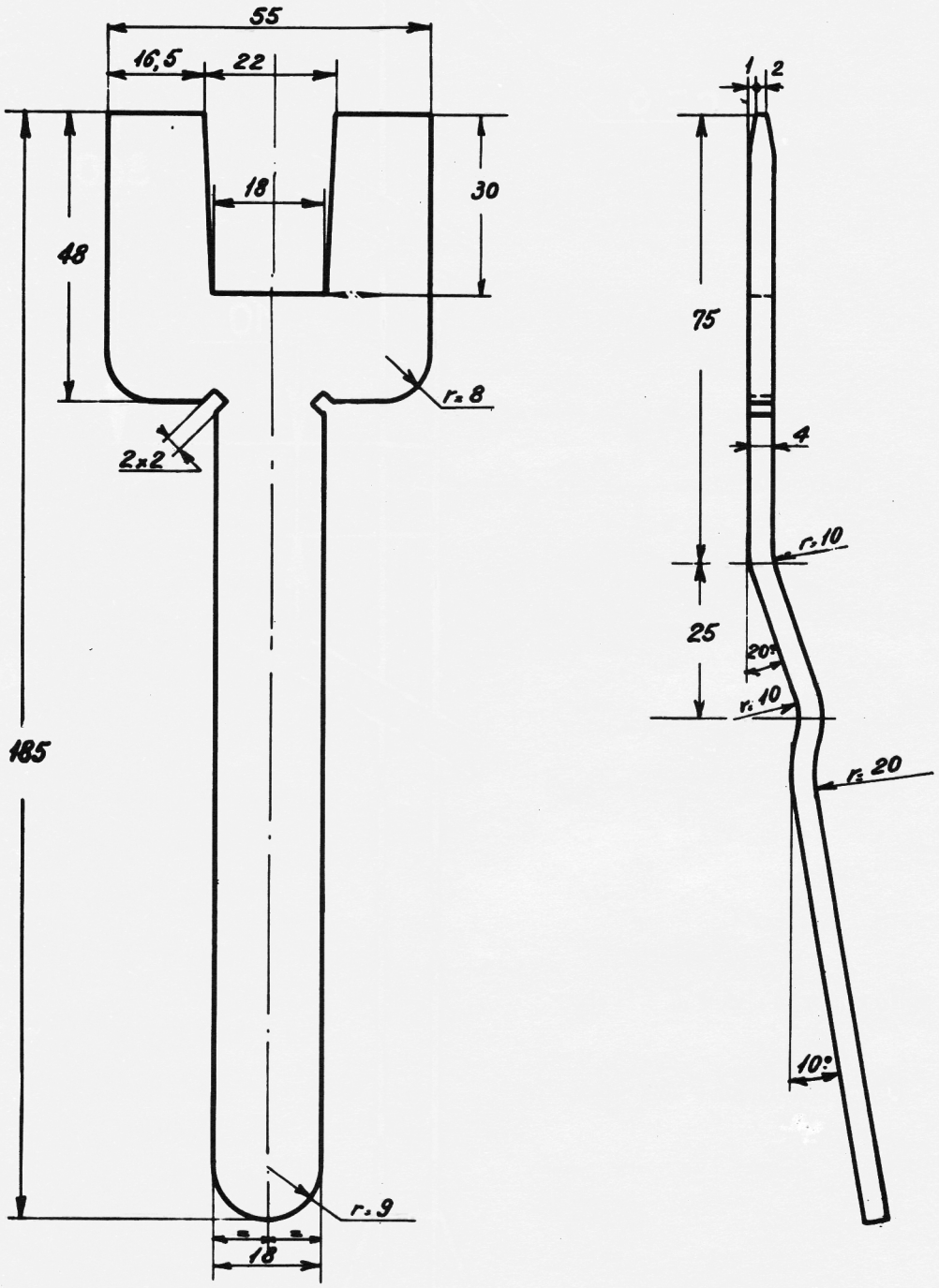

MR.630_84/21

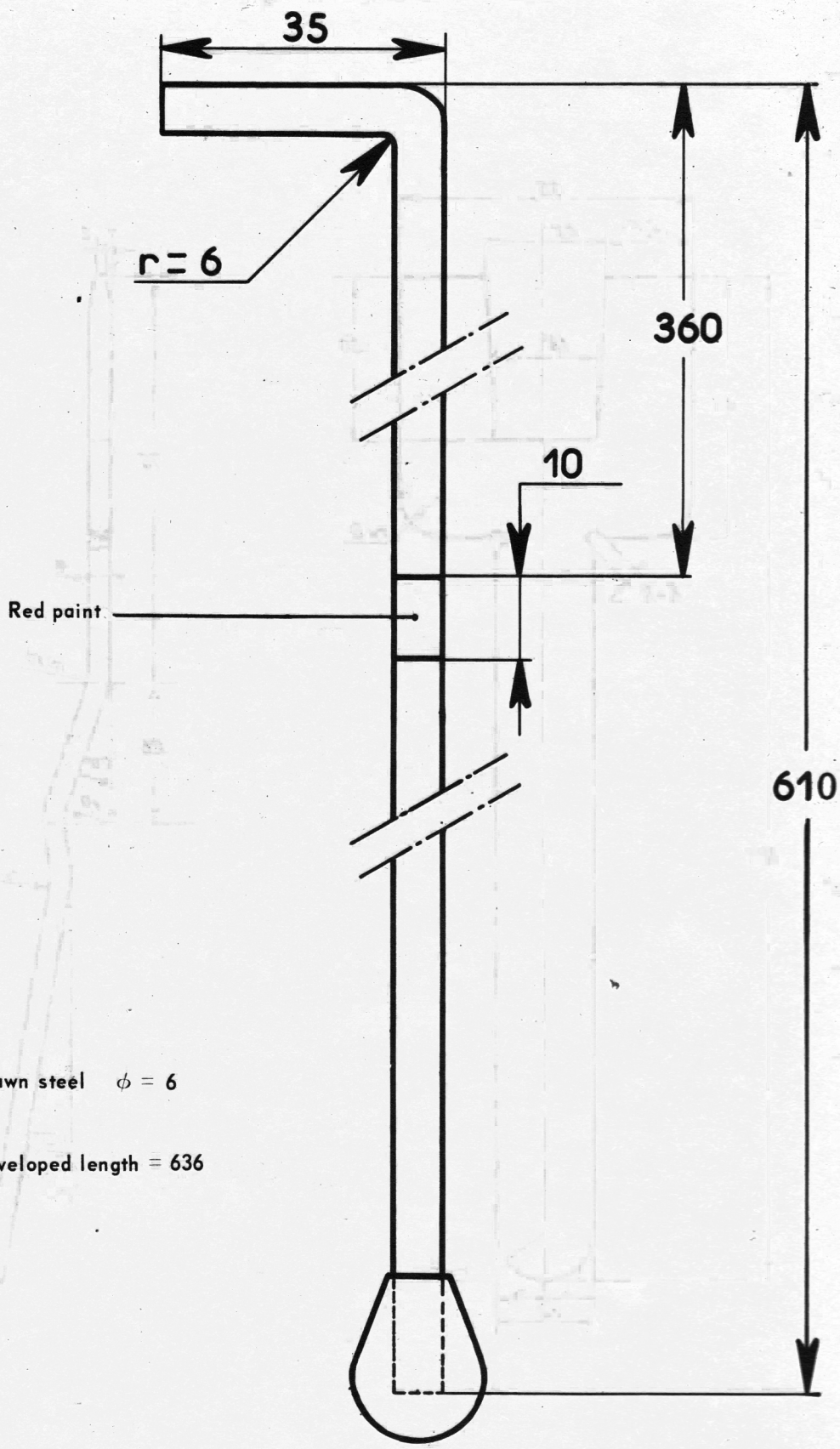

Drawn steel $\phi = 6$

Developed length = 636