MANUAL N° 810-2

SECOND SECTION

Manual 810-2

RECONDITIONING

LIST OF OPERATIONS
IN THE SECOND SECTION OF THE MANUAL N° 810-2

Operations where the number is preceded by the letter « G » are common to all types of vehicles of the « GS » family.
Operations where the number is preceded by the letters « GE » or « GF » are specific to the five-or three-door versions of the « GS » Estate respectively.
Operations where the number is preceded by the letter « Gea » are specific to vehicles fitted with a Torque Converter.

Operation Number	DESCRIPTION
	ENGINE
G.100-3	Overhauling an engine
G.100-5	Stripping down and assembling an engine
G.112-3	Repair of a cylinder head
	GEARBOX
G.330-3	Repair of a four-speed gearbox
Gea.330-3	Repair of a three-speed gearbox (torque converter)
	TOOLS
	List of special tools
	Manufacturing drawings for tools not sold

ENGINE

(Vehicles produced up to August 1972)

TRANSVERSE SECTION

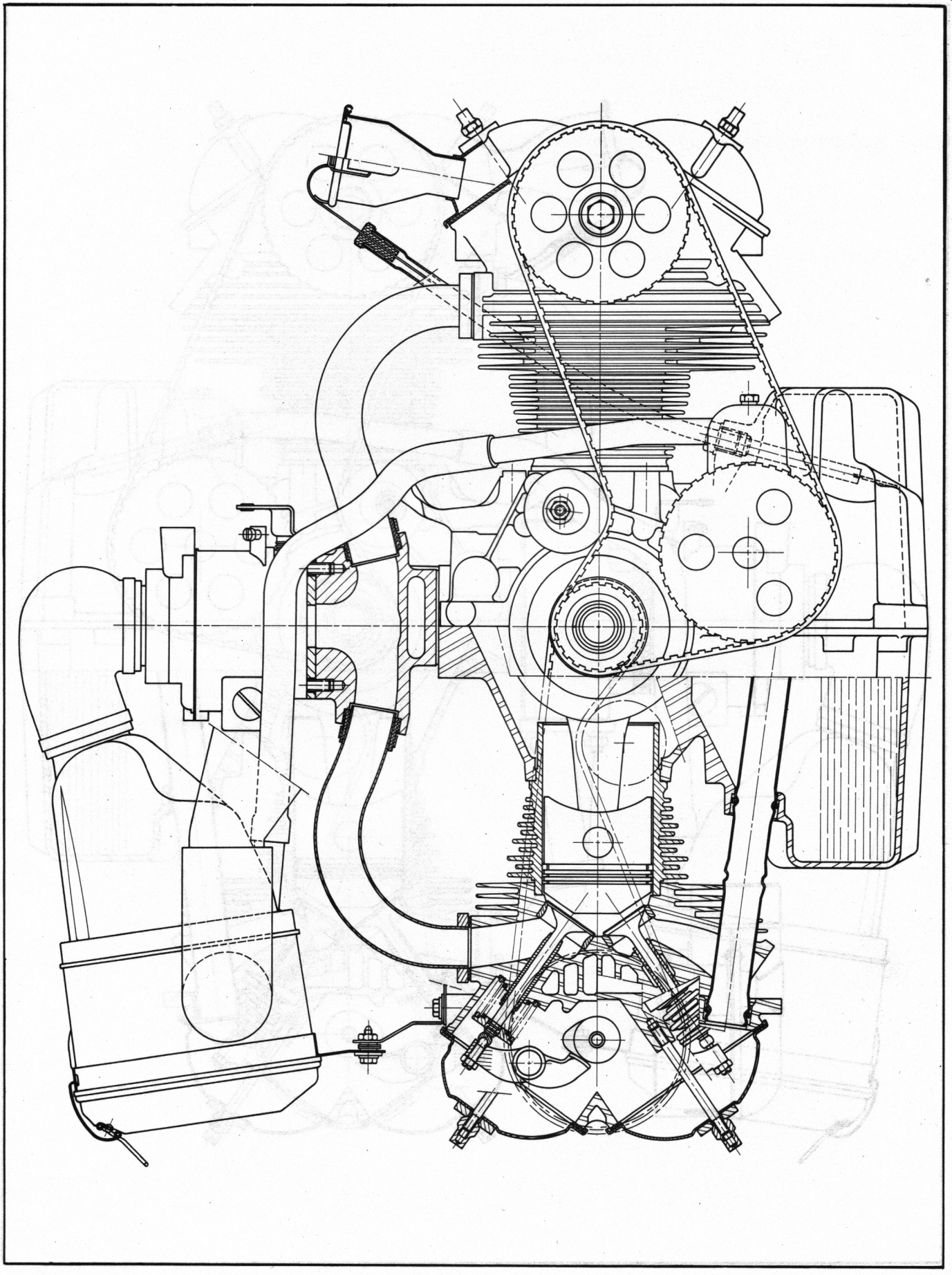

ENGINE

(Vehicles produced from August 1972)

TRANSVERSE SECTION

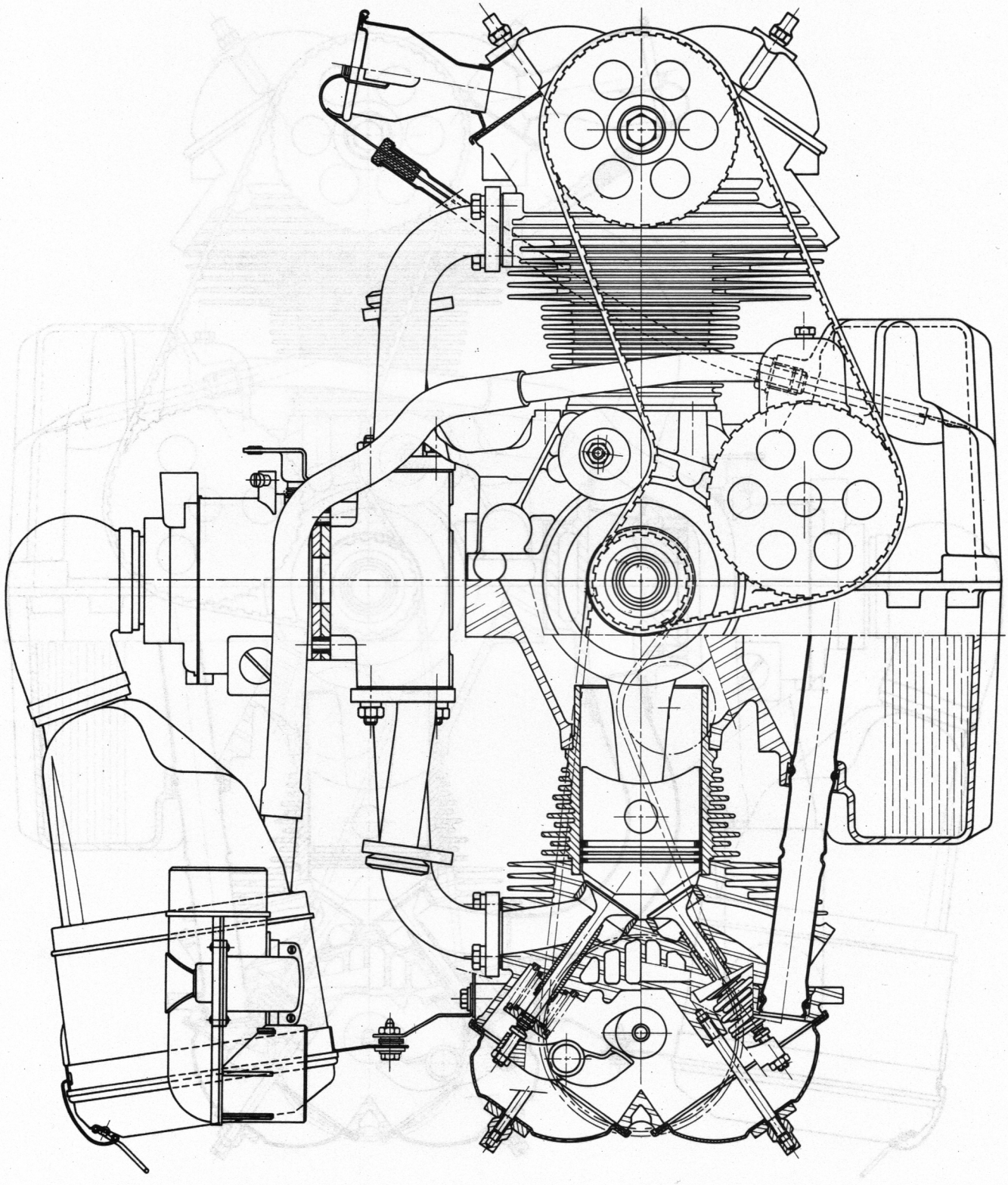

ENGINE

HORIZONTAL SECTION

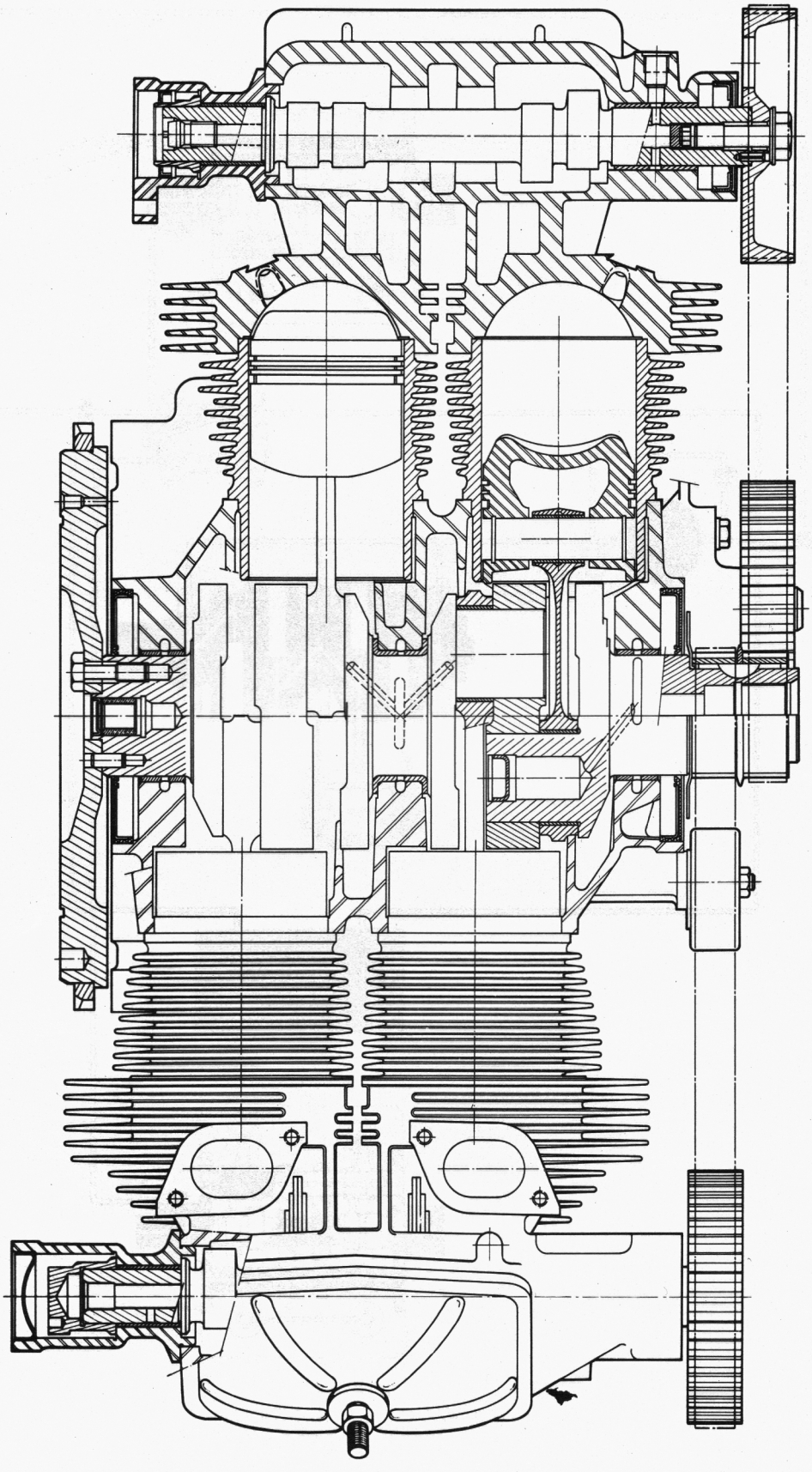

DIAGRAM OF LUBRICATION SYSTEM

(All types GX vehicles produced up to September 1971)

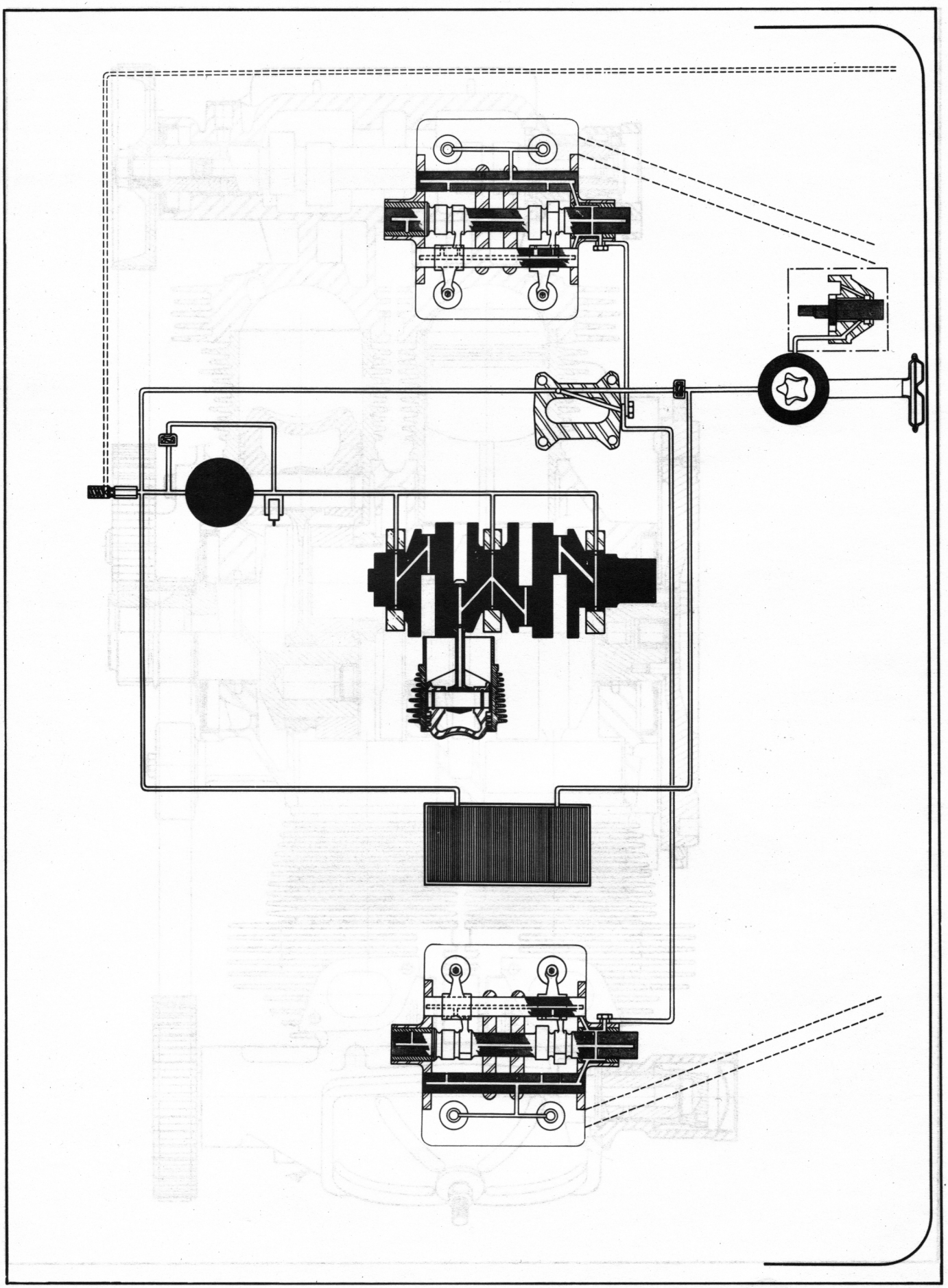

G.22-3

DIAGRAM OF LUBRICATION SYSTEM

(All types GX vehicles produced from September 1971 to August 1972)

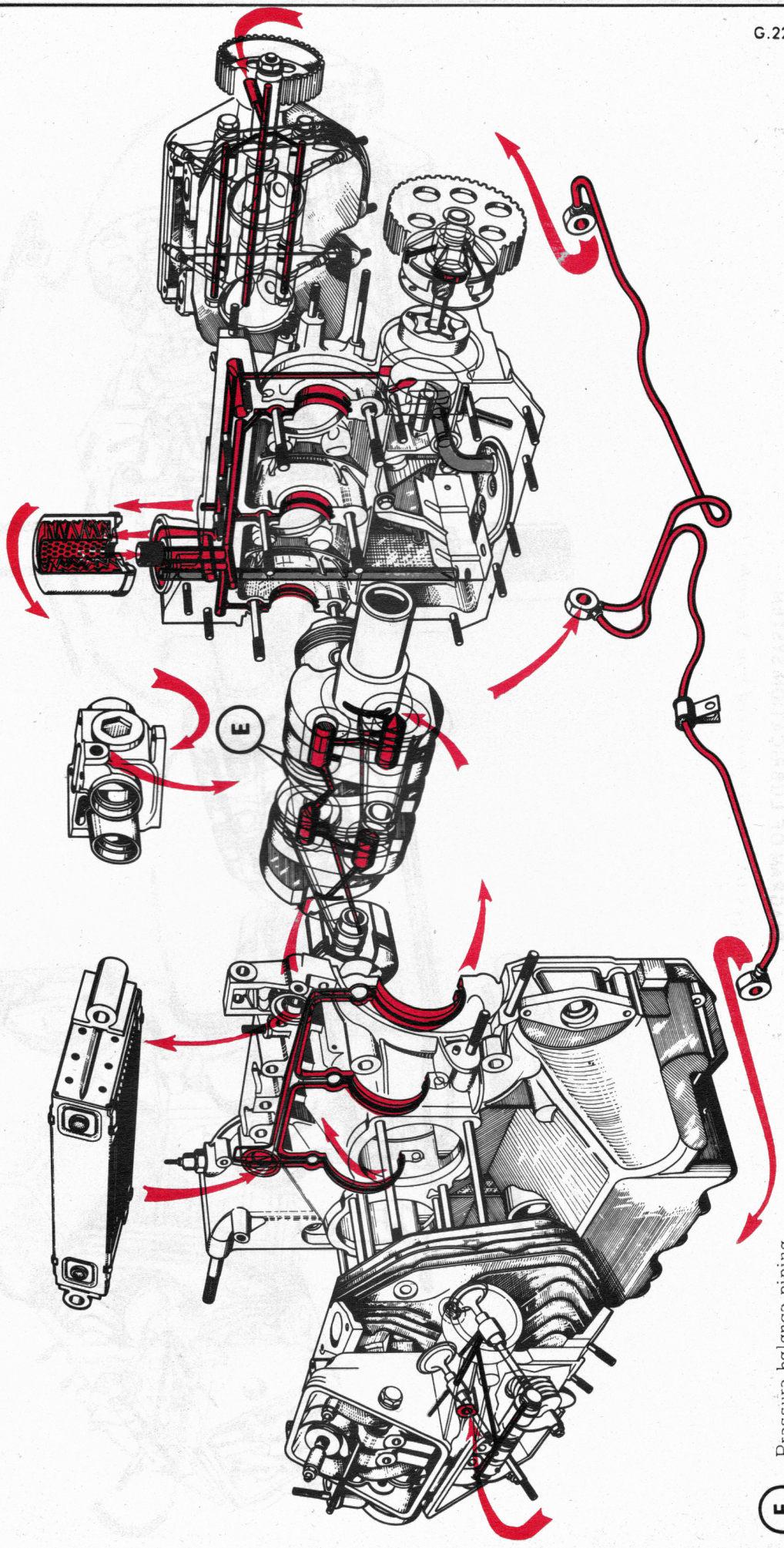

(E) Pressure balance-piping

A.22-4 a

DIAGRAM OF LUBRICATION SYSTEM

(All types GX vehicles produced from September 1972)

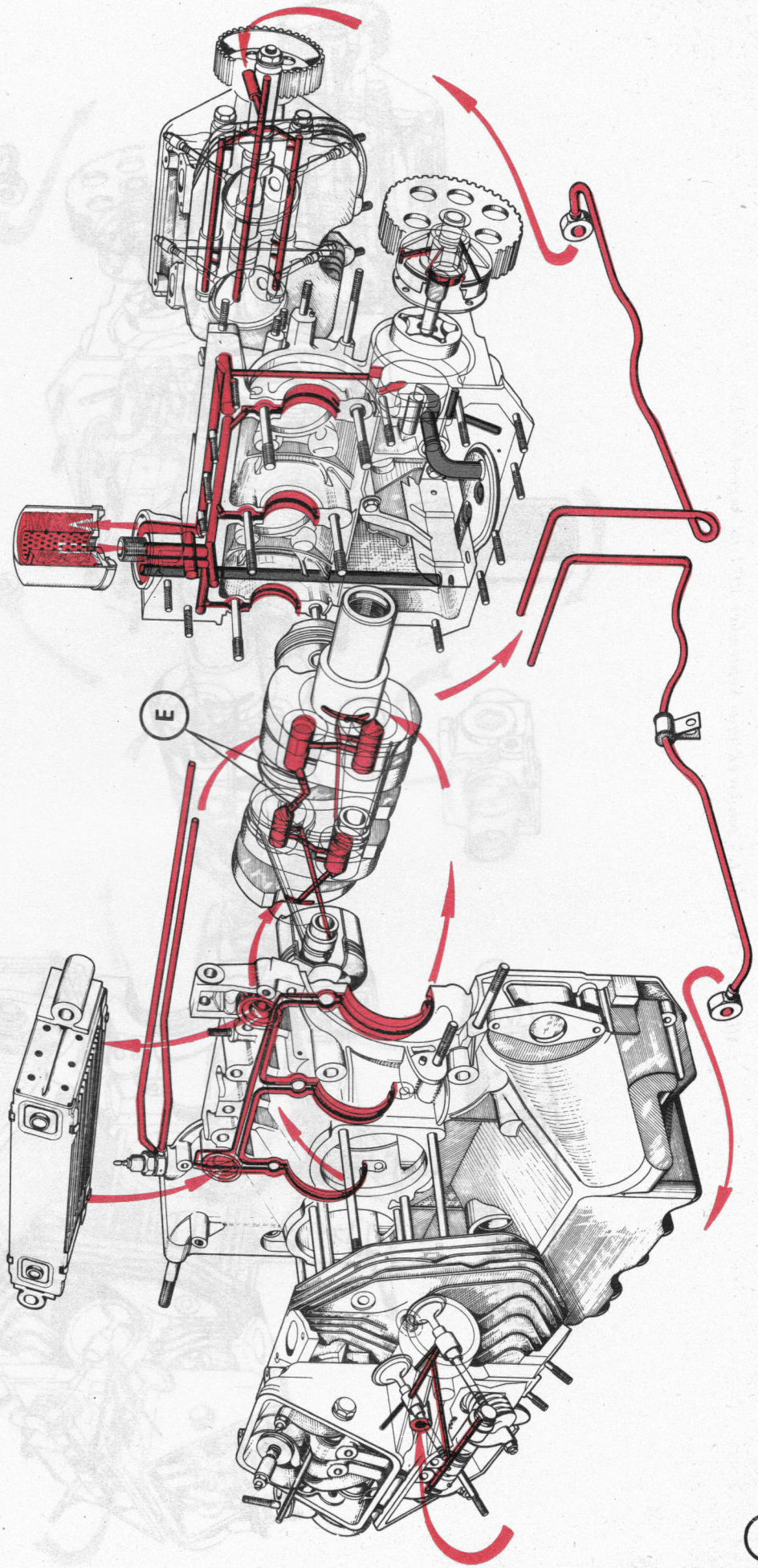

(E) Pressure balance-piping

SPECIAL FEATURES

Engine casing :

Tightening torques

- Halves of engine casing nuts ..... 12 to 15 mΛN (1.2 to 1.5 m.kg)
- Bearing nuts ..... 34 to 45 mΛN (3.4 to 4.5 m.kg)
- Bolts fastening supports to engine casing (they must be the same brand of manufacturer) ..... 50 to 60 mΛN (5 to 6 m.kg)
- Nut securing dipstick guide ..... 30 to 40 mΛN (3 to 4 m.kg)
- Drain plug ..... 35 to 40 mΛN (3.5 to 4 m.kg)
- Oil pump bearing screw ..... 15 to 18 mΛN (1.5 to 1.8 m.kg)
- Screw or fixing nuts for inlet casing ..... 18.5 mΛN (1.8 m.kg)
- Cylinder head studs ..... 6 to 8 mΛN (0.6 to 0.8 m.kg)
- Oil strainer screw ..... 14 mΛN (1.4 m.kg)

Cylinder head studs :

a) Four different lengths of studs : Extremity « e » casing side *(shortest threaded length).*

b) Location of different studs on engine casing.

c) Length of different studs for G. 10 and G 103 engines

G. 11-3

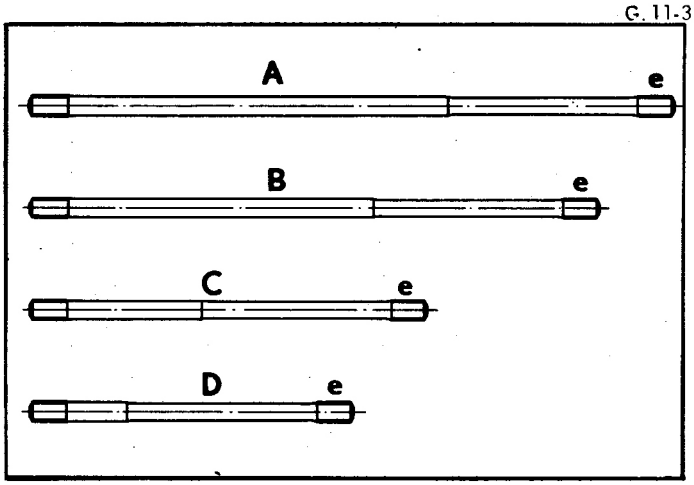

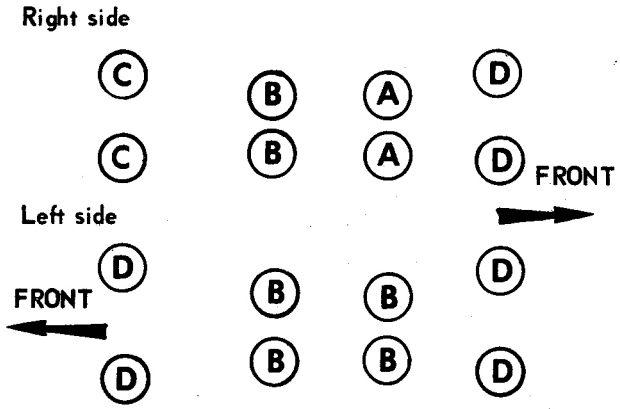

Manual 810-2

Crankshaft - connecting rods

- Flanged central bearing : Interior diameter : ..... 57.5 mm without marking *(First possibility)*
  57.4 mm : red paint marking *(Second possibility)*
  Overall total width : ..... $25.9 \begin{smallmatrix}+0.05\\0\end{smallmatrix}$ mm
  Bearing surface support width ..... 15.3 mm
- Front and rear bearings : Interior diameter ..... 57.5 mm : without marking *(First possibility)*
  57.4 mm : red paint marking *(Second possibility)*
  Total width ..... $20.8 \begin{smallmatrix}+0.05\\0\end{smallmatrix}$ mm
  Bearing surface support width ..... 16.05 mm
- Lateral play at the crankshaft of the central bearing (cannot be adjusted) ..... 0.09 to 0.20 mm

Do not interfere with the front and rear bearings of the crankshaft (micro-turbine)

- Bore of small end bushes (1015 cc) ..... $20{,}005 \begin{smallmatrix}+0.011\\-0.006\end{smallmatrix}$ mm
- Bore of small end bushes (1220 cc) ..... $22.005 \begin{smallmatrix}+0.011\\-0.006\end{smallmatrix}$ mm
- Lateral play of connecting rods ..... 0.13 to 0.18 mm

Flywheel :

- Maximum run-out of starter ring ..... 0.3 mm
- Orientation of starter ring : teeth entry towards gearbox

Tightening torques of fixing bolts :

- of the flywheel (face and threads oiled) or of the diaphragm *on converter vehicles* (LOCTITE N° GX. 01 460 01 A). Bolts to be replaced whenever dismantled by bolts with head marking ..... 64 to 69 mΛN (6.4 to 6.9 m.kg)
- Clutch mechanism ..... 18.5 mΛN (1.8 m.kg)

Cylinders

- Two types of cylinders according to their heights :

	Engine G.10	Engine G. 103
Red marking	75.78 to 75.80 mm	86.88 to 86.90 mm
Green marking	75.80 to 75.82 mm	86.89 to 86.92 mm

- Fitting : ATTENTION : *On the same side of an engine, it is imperative that the two cylinders be of identical type.*

Pistons - rings

A.12-50 a

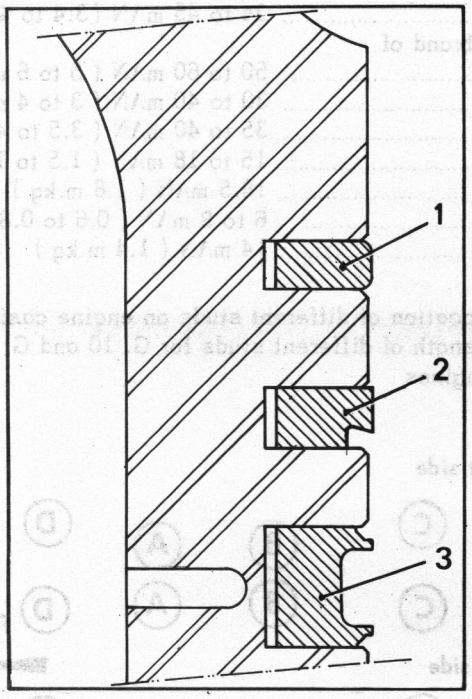

Pistons :

- The gudgeon pins are floating
- Orientation of pistons :
  After fitting , the number showing the compression ratio should be legible.

Rings :

- The number (or maker's mark) should be uppermost.
- Order of fitting : (from the piston crown)
  - 1 - compression ring
  - 2 - scraper ring
  - 3 - oil ring

Tightening torques :

- Cylinder head nuts :	
1st tightening	8 to 10 mΛN (0.8 to 1 m.kg)
2nd tightening :	
- 12 mm bolts A/F	16 to 18 mΛN (1.6 to 1.8 m.kg)
- 13 mm bolts A/F	20 to 25 mΛN (2 to 2.5 m.kg)
- Rocker cover nuts	8 to 10 mΛN (0.8 to 1 m.kg)
- Rocker shaft blanking bolt	17 to 18 mΛN (1.7 to 1.8 m.kg)
- Nuts on exhaust flange	15 mΛN (1.5 m.kg)
- Camshaft bearing studs (fitted with LOCTITE N° GX. 01 459 01 A)	3 to 5 mΛN (0.3 to 0.5 m.kg)
- Lubrication joint screw	18 to 20 mΛN (1.8 to 2 m.kg)
- Rocker shaft set screw (fitting with LOCTITE N° GX 01 459 01 A)	(3 mm Allen key)
- Intake flange screw	18.5 mΛN (1.8 m.kg)
- Camshaft bearing bolts	15 to 18 mΛN (1.5 to 1.8 m.kg)

Cylinder heads :

ORDER OF TIGHTENING FIXING BOLTS

7979

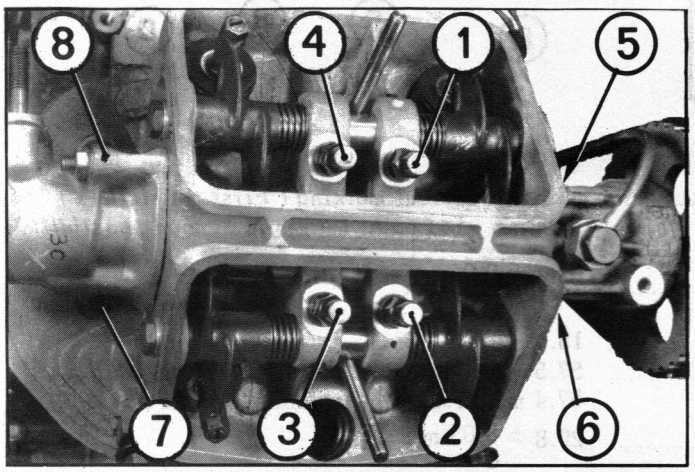

Distribution :

- End-float of camshafts (cannot be adjusted) ..... 0.05 to 0.15 mm
- Timing

THEORETICAL SETTING

With a clearance of 1 mm between rocker and valve at intake and exhaust :

		Engine G.10 (1015 cc)	Engine G.103 (1220 cc)
Advance intake opening	BTDC :	2° ± 1°30'	4°10' ± 1°30'
Retard intake closing	ABDC :	34° ± 1°30'	31°50' ± 1°30'
Advance exhaust opening	BBDC :	34° ± 1°30'	36°10' ± 1°30'
Retard exhaust closing	ATDC :	2°30' ± 1°30'	0°20' ± 1°30'

Tightening torques :

- Tensioning pulley nut ..... 18.5 mΛN (1.8 m.kg)
- Camshaft wheel nut ..... 82 mΛN (8.2 m.kg)
- Tensioning pulley stud ..... 3 to 5 mΛN (0.3 to 0.5 m.kg)

Rockers

- Valve clearances : *engine cold*
  Intake and exhaust ..... 0.20 mm
  Set each clearance separately when the heel of the rocker is on the back of the corresponding cam.
- Identification of the rocker shafts :
  - L.H. intake shaft identical to the R.H. exhaust shaft : unmarked
  - R.H. intake shaft identical to the L.H. exhaust shaft : Marked ..... blind end bore at the centre of shaft

Lubrication system

- Grade of oil ..... TOTAL Altigrade GTS 20 W 50 or GT 20 W 40
- Contents of casing : after dismantling ..... 4 litres
  after draining ..... 3.5 litres
  between minimum and maximum ..... 0.5 litre
- Oil pressure at 80 ± 5° C at 2000 rpm ..... 4.7 bars min.
  at 6000 rpm ..... 6.2 to 7 bars
- Pressure switch setting ..... 0.5 to 0.8 bar (7.1 to 11.3 psi)
- Thermal switch setting ..... 135 ± 3° C
- Relief valve spring setting
  free length ..... 58.5 mm
  length under load of 8.5 ± 0.4 kg ..... 33 mm
- « By-pass » valves setting :
  filter (white marking) ..... 0.9 to 1.15 bar (12.8 to 16.2 psi)
  cooler (green marking) ..... 1.8 to 2.5 bars (25.6 to 35.5 psi)
- Filter cartridge : Colour of fitting instructions appearing on filter body
  up to 1000 km (600 miles) ... red
  above 1000 km (600 miles) ... white
- *Fitting of an oil suction tube in the engine casing with* ..... LOCTITE N° GX. 01 460 01 A

Tightening torques :

- Insert of filter cartridge (LOCTITE N° GX. 01 459 01 A) ..... 10 to 15 mΛN (1 to 1.5 m.kg)
- Oil cooler fixing screw ..... 18.5 mΛN (1.8 m.kg)
- « By-pass » valve plug of the cooler (LOCTITE N° GX. 01 459 01 A) ..... 45 to 50 mΛN (4.5 to 5 m.kg)
- Filter cartridge : bring cartridge close to casing contact and then tighten 1/2 to 3/4 of a turn (joint oiled)
- Oil pressure switch ..... 22 mΛN 2.2 m.kg)
- Union for oil thermal switch ..... 50 to 55 mΛN (5 to 5.5 m.kg)
- Oil thermal switch ..... 25 mΛN (2.5 m.kg)

Fan

- External diameter ..... 290 mm
- Number of blades 9
- Adjustment of starter dog :
  a) *at TDC. line up starter dog horizontally*
  b) *projected portion of starter dog beyond lock nut after adjustment (approximately)* ..... 5 mm of thread cutting
- Tightening torque of lock nut (face and threads greased) ..... 170 to 200 mΛN (17 to 20 m.kg)

OVERHAULING AN ENGINE

8722

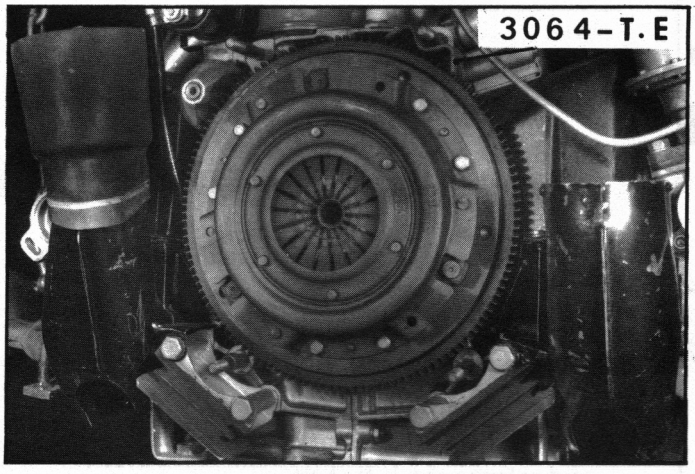

7915

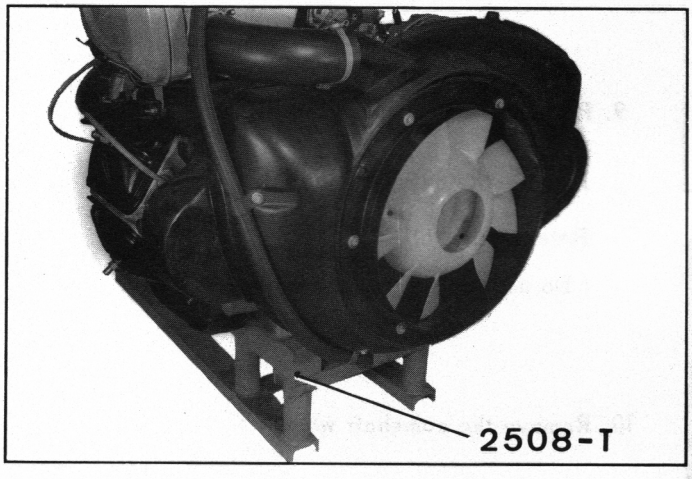

9532

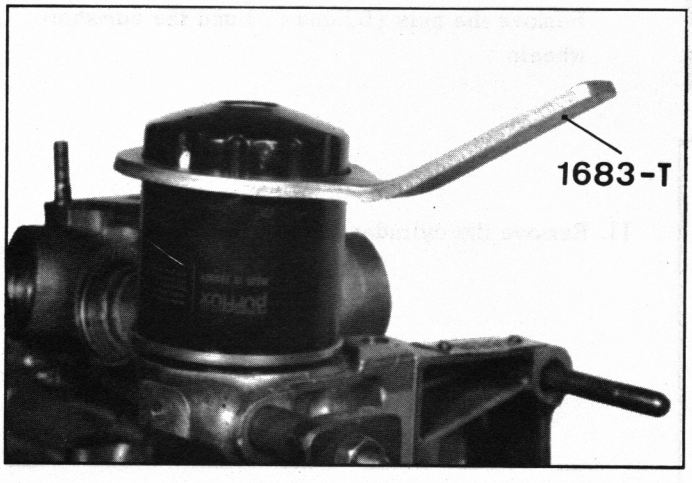

I. DISMANTLING

1. Strip down the engine.

2. Remove :
- the clutch (use tool 3064-T.E to immobilize steering wheel).
- the front flexible mountings.

3. Place the engine on stand 2508-T.
Drain the oil.

4. Remove :
- high pressure pump tubes,
- the air filter,
- the carburettor and its distance piece or the carburettor-inlet chamber-and manifold assembly.
- the covers of the upper ducts,
- the inlet pipes *(vehicles produced up to August 30. 1972).*
- the oil cooler,
- the air intake rubber seal for the cooler,
- the starter,
- the starter dog,
- the fan,
- the drive belt of the alternator,
- the fan cowl and its spacers,
- the distributor, its protecting spacer and the spark plug leads,
- the spark plugs,
- the petrol pump and its distance piece,
- the petrol pump securing studs,
- the alternator and its tensioner,
- the oil pressure switch,
- the thermal switch for the oil temperature,
- the high pressure pump,
- the exhaust manifolds,
- the fixing studs for the manifolds,
- the flywheel,
- the heating ducts,
- the front and rear deflectors (right and left side),
- the ducts beneath the cylinders,
- the cooling ducts,
- the dipstick tube,
- the breather,
- the assembly studs for the engine-gearbox.

5. Remove the oil filter.

Use special wrench 1683-T.

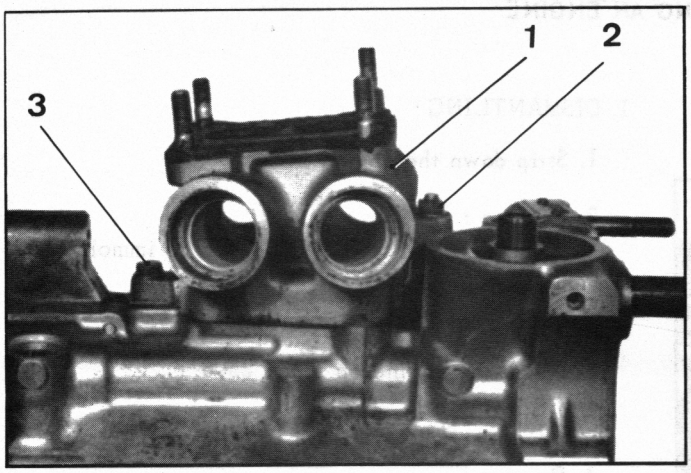

9533

6. Remove the lubrication pipe (6) :

Remove :
- the union screws on the right and left cylinder heads and on the heater box of the carburettor,
- the oil pressure switch.

7. Remove the heater box (1) of the carburettor (according to fitting)

To do so, remove :
- the fixing bolt (3) and nut (2) of the heater box,
- the O-ring between the box and engine casing

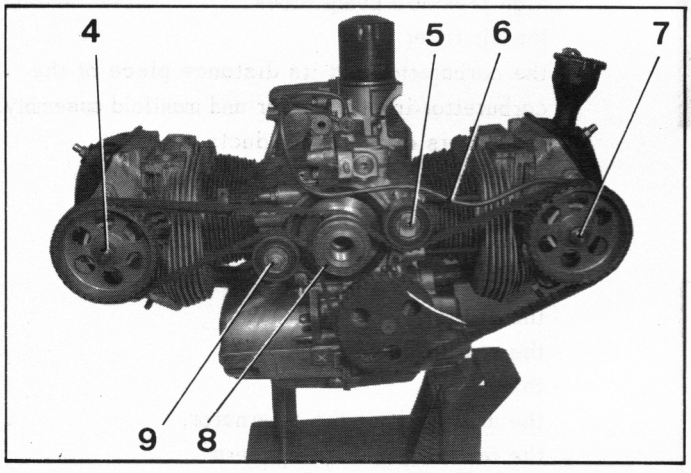

9465

8. Remove the camshaft drive belts :

Remove the outer flange (8).
Loosen the nut (5), compress the tension roller and release the L.H. belt.
Release pinion (12) from the camshaft.
Remove the key.
Remove the protecting plate (13).

9. Remove the tension rollers :

Remove the nuts (5) and (9).

Release the rollers.

(Do not mislay the thrust plates (14).

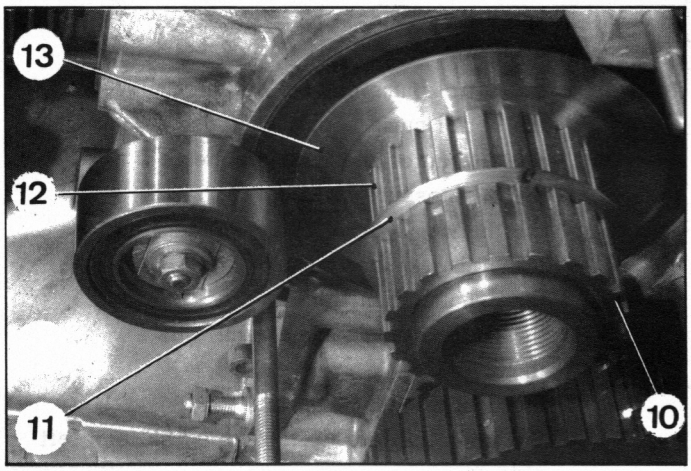

8036

10. Remove the camshaft wheels :

Block the wheel with the aid of tool MR. 630-11/26.

Remove the nuts (6) and (7) and the camshaft wheels.

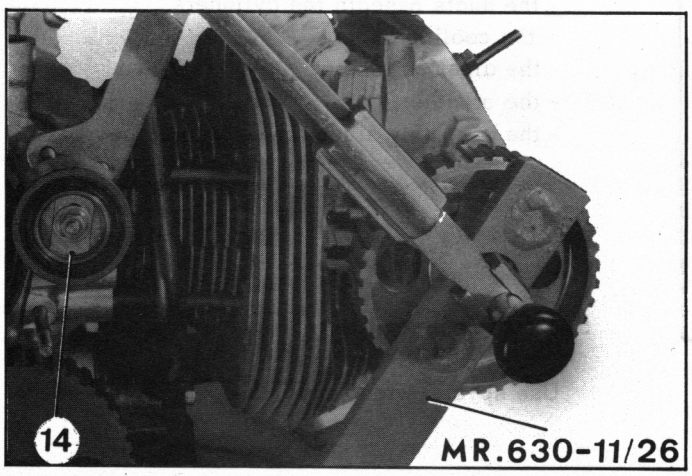

8029

11. Remove the cylinder head cover.

7979

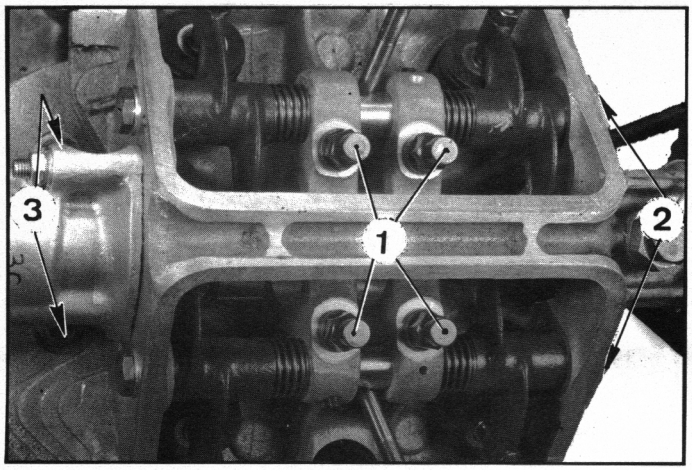

7996

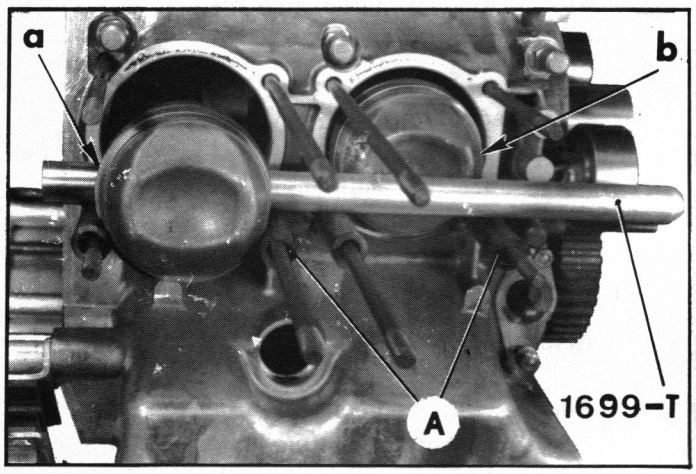

Manual 810-2

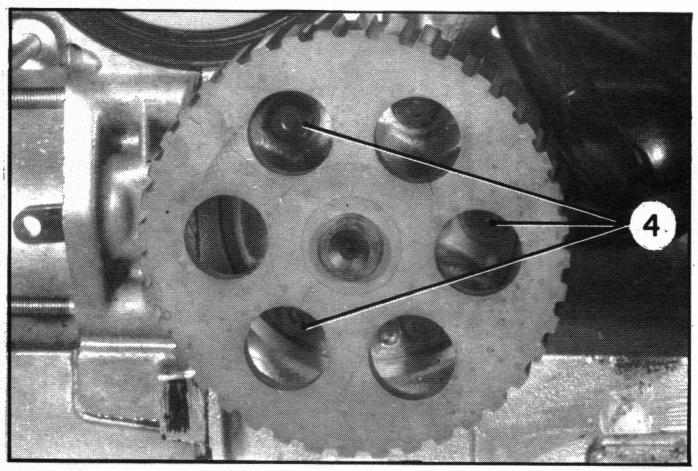

11586

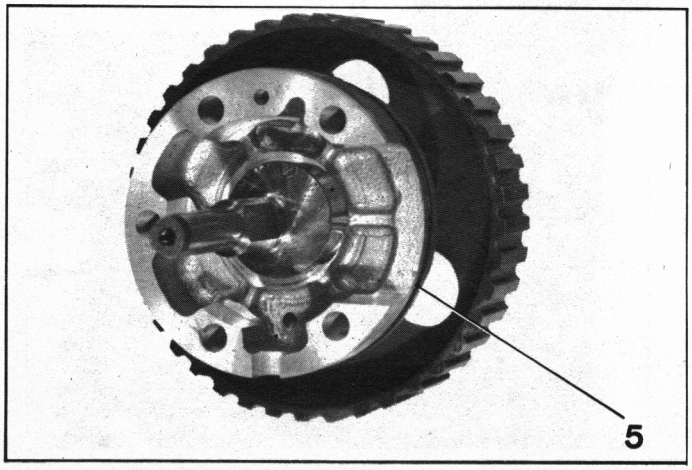

8001

12. Remove the cylinder heads :

Remove fixing nuts (1), (2) and (3) of each cylinder head.

Release :

- the cylinder heads,
- the oil return tubes,
- the ducts beneath the cylinders (Engine G.103)

13. Remove the cylinders :

Remove the four cylinders.

NOTE :

Should the cylinders be used again, mark their respective positions.

Cap the studs with pieces of rubber tubing A to avoid scoring the pistons.

14. Remove the pistons :

- Remove the circlips situated towards the outside of the engine in « a » and « b »,
- Remove the gudgeon pin by hand using mandrel 1699-T.
- Release the pistons (place them in the corresponding cylinders if they are to be refitted)
- Remove the pieces of rubber tube A.

15. Remove the rings.

16. Remove the oil pump operating lever :

Remove the five fixing bolts (4).

CAUTION :

Remove the operating control in levering it on two diametrically-opposed points on the pulley to avoid damaging the pump bearing.

Remove the O-ring (5).

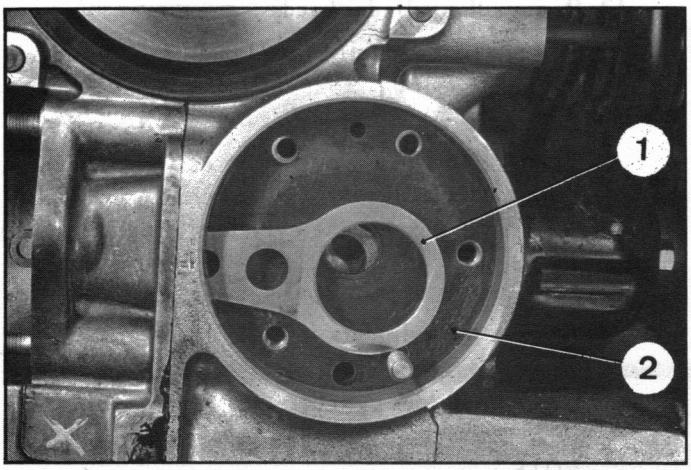

7999

17. Remove the H.P. pump connecting rod :

Release the connecting rod (1).

18. Remove the oil pump pinions :

Remove :
- the cover plate (2),
- the pinions (3) and (4).

19. Place the engine as shown in the illustration with the L.H. half of the engine casing downwards.

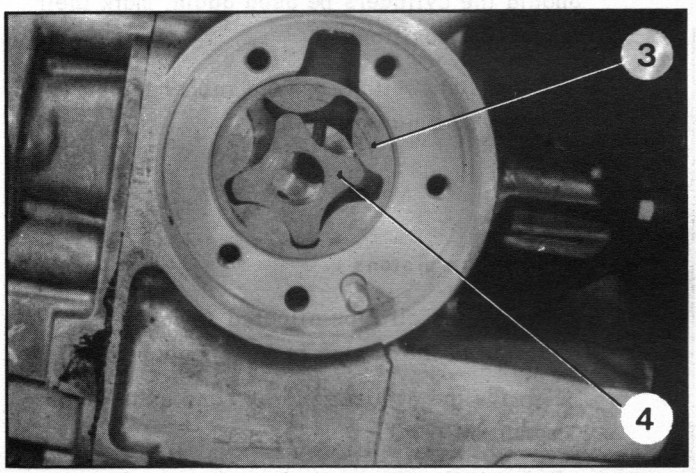

8000

20. Remove the R.H. half engine casing :

Remove :
- the nuts (5),
- the assembly nuts (6) and (7) of the half engine casings,

Release the R.H. half engine casing.

21. Remove the crankshaft :

Release the front and rear seals.

Remove :
- the crankshaft-connecting rod assembly,
- the half bearings (8), (9) and (10).

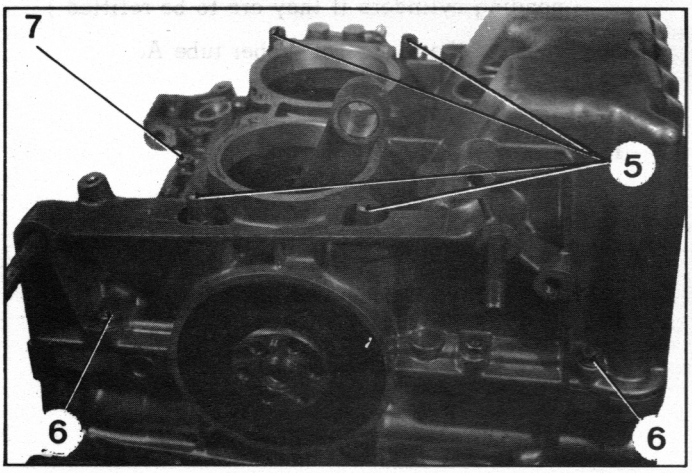

9475

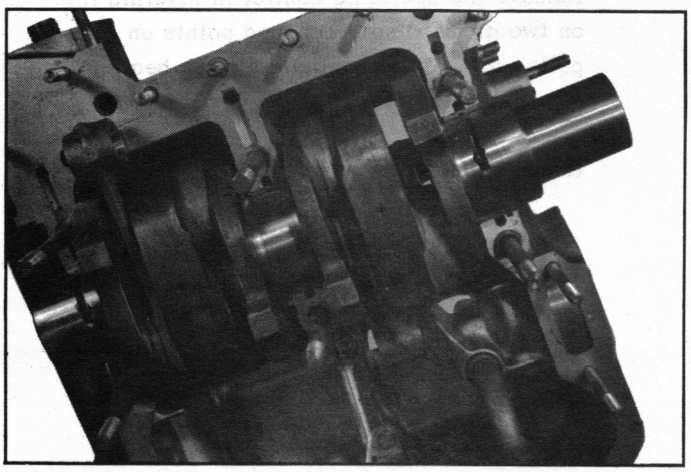
8733

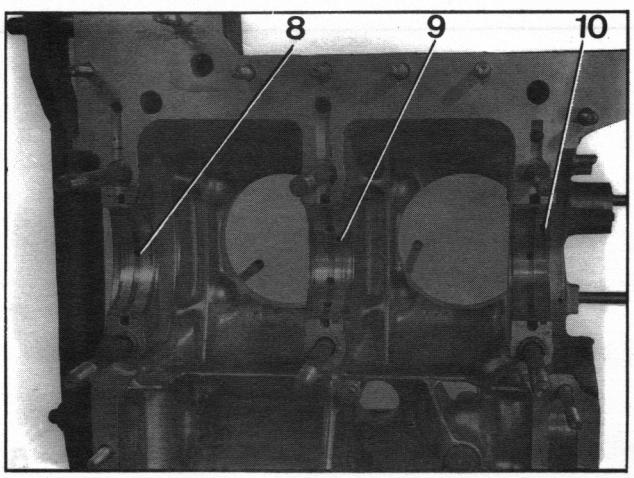

8732

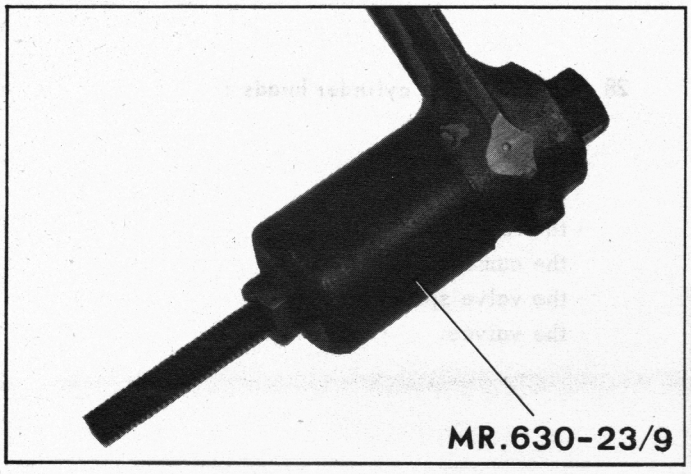

22. If necessary, remove the conrod small-end bushes

NOTE :

This delicate operation is not advised. It can only be performed in a specialized workshop. Use extractor MR. 630-23/9.

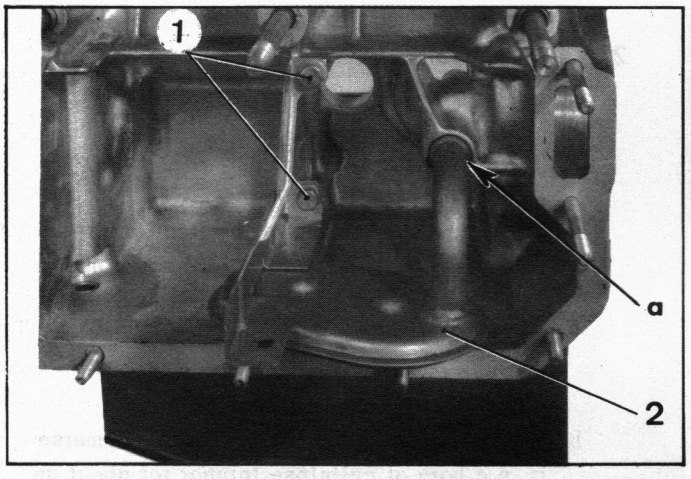

23. Remove the intake strainer :

Remove the bolts (1).
To facilitate removal, heat the engine housing in zone « a » surrounding the strainer pipe.
Remove the strainer (2).
Remove the sealing joint of the pipe.

24. Remove the relief valve :

Remove :
- the circlip (3),
- the washer (4),
- the spring washer (5),
- the piston (6),
- the spring (8),
- the jacket (7),
- the spring cap (9).

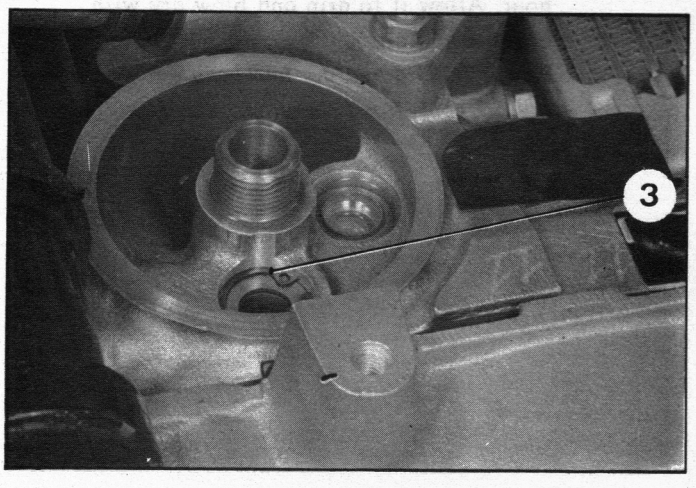

25. Remove the front and rear plugs of the lubrication system.
Remove the drain plug.

26. If necessary, remove the « by-pass » valves.

27. Remove the L.H. half engine casing of support 2508-T.

NOTE : In the case of an exchange of half engine casings :
- Remove the studs,
- Use extractor 2410-T for the cylinder head studs. Place the tool at the base of these.

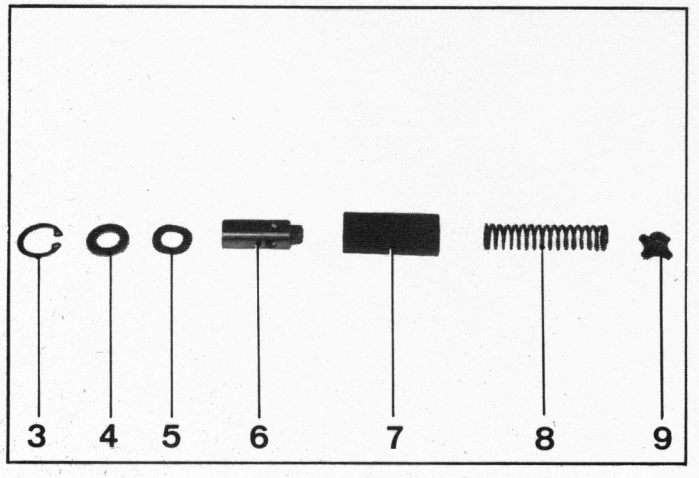

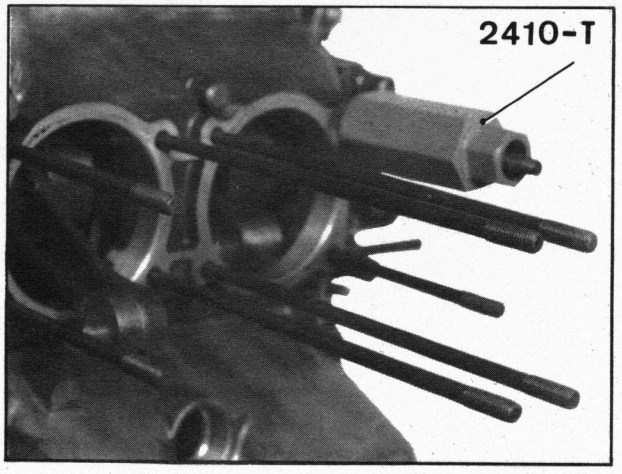

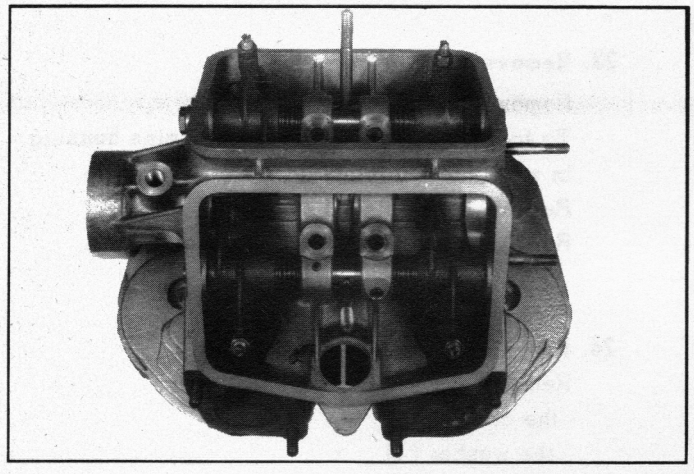

28. Strip down the cylinder heads :

Remove :
- the rocker shafts,
- the rocker,
- the camshafts,
- the valve springs,
- the valves.

29. Clean the parts.

IMPORTANT NOTES :

a) To ensure the sealing of the front and rear bearings, the crankshaft possesses a micro-turbine machined in each seal area. Never use emery cloth in this zone, otherwise an oil leak could occur.

b) To thoroughly clean the oil cooler, immerse it in a bath of cellulose thinner for about an hour. Allow it to drip and blow dry with compressed air.
However, if a bearing has been « run », replace the oil cooler and the oil intake strainer.

9032

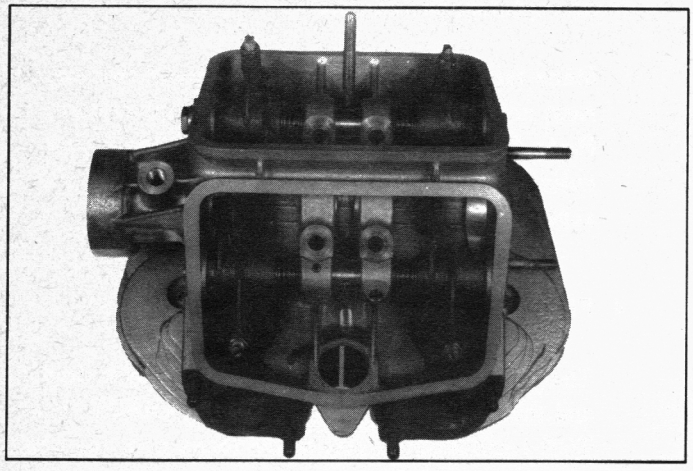

4248

Manual 810-2

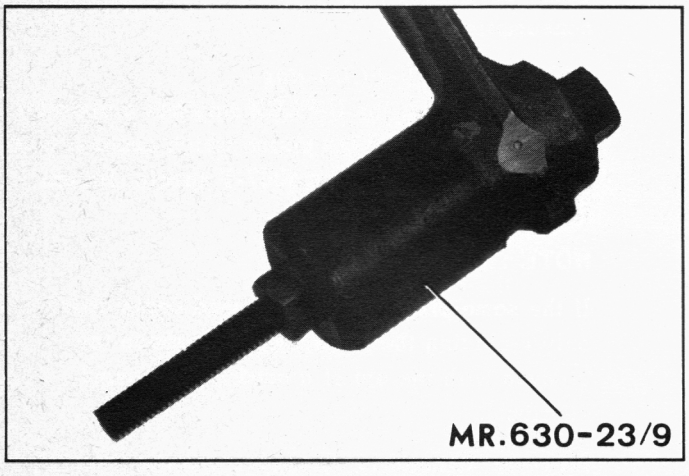

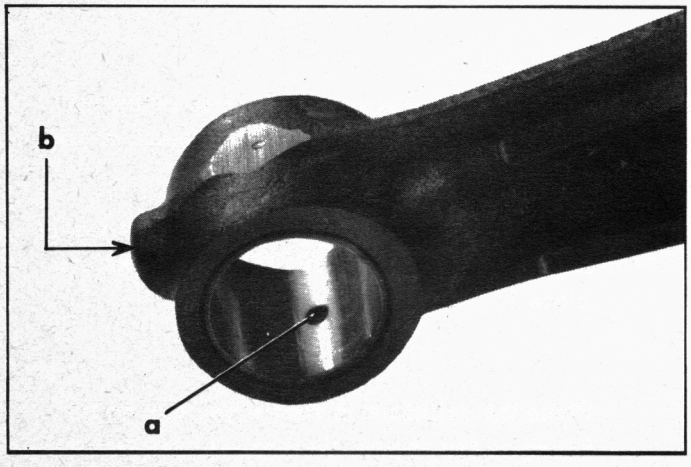

4250

II. PREPARATION.

1. Prepare the cylinder heads :

a) If necessary, grind the valves and their seats.
b) Lap the valves.
c) Fit the valves and their springs.
d) Fit the camshafts.
e) Fit the rockers and their shafts.

2. Prepare the connecting rod small-ends :
(If necessary).

Fit the bushes in the connecting rod small-ends.

NOTE :

This operation can be performed only in a specialized workshop.

The bushes sold by the Replacement Parts Departement have a ground bore about 0.05 mm undersize.

Blank the bores « a » with grease or tallow. Fit the prepared bush (extractor MR.630-23/9 so that the centre line of the lubrication holes in the bush is perpendicular to that of the connecting rod.

Ream the bush. This delicate operation must be carried out with the greatest care.

The bush should be reamed to :

Engine G.10 (1015 cc)	Engine G.103 (1220 cc)
$20.005 \begin{smallmatrix} +0.011 \\ -0.006 \end{smallmatrix}$ mm	$22.005 \begin{smallmatrix} +0.011 \\ -0.006 \end{smallmatrix}$ mm

If a gauge is not available, use the new pin to check the bore.

Blow compressed air through bore « b » to remove any grease or swarf.

Clean the bore of the bush.

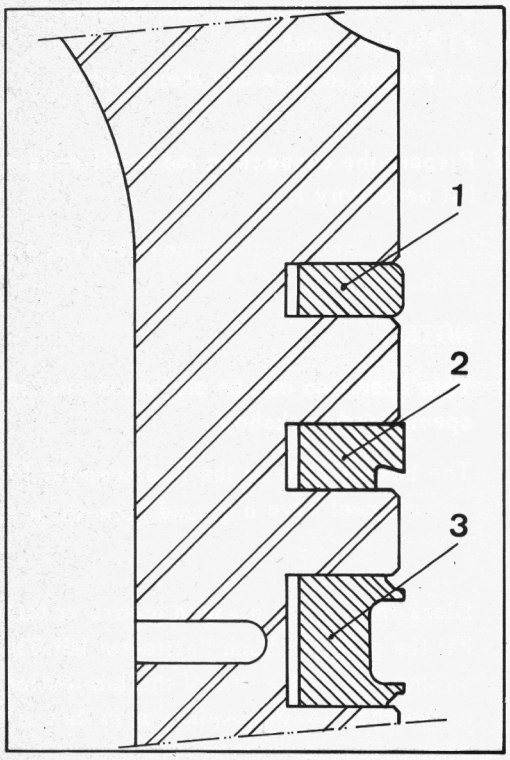

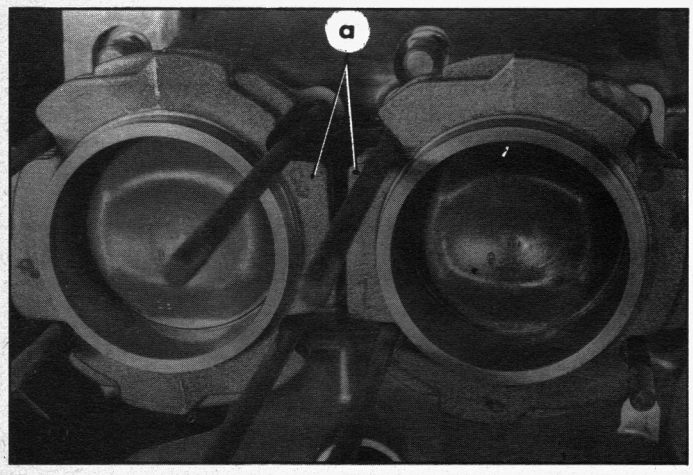

3. Prepare the pistons :

IMPORTANT :

It is not possible to separately replace one or two cylinder-piston sets.

Since the difference in weight between two pistons must not exceed a few grams, the Replacement Parts Department *only sells sets of four piston cylinder assemblies, which must not be fitted separately.*

4. Fit the rings :

The top compression ring (1), the scraper ring(2) and the oil ring (3) have a marking (HAUT, H or TOP) engraved on one of the faces near the gap.

In fitting, this marking must be positioned towards the upper part of the piston.

Badly positioned rings will cause excessive oil consumption.

IMPORTANT : *U-FLEX ring :*
In its free state, the U-FLEX ring has a diameter greater than that of the piston which necessitates the use of the 3010-T or 4007-T special fixture for fitting it to the piston.

NOTE :

If the same pistons are to be used again after only replacing the rings, carefully clean the grooves with the aid of a used ring (ground section).

However, if there is excessive clearance in the groove, the piston must be discarded.

5. Prepare the cylinders :

CAUTION :

There are two classes of cylinders (different heights)marked by touches of different colours of paint (green or red).

Both cylinders fitted to **ONE SIDE** of the engine **MUST BE OF THE SAME COLOUR** (identical class)

Place the cylinders in such a way that after fitting on the engine, the fins « a » are facing each other.

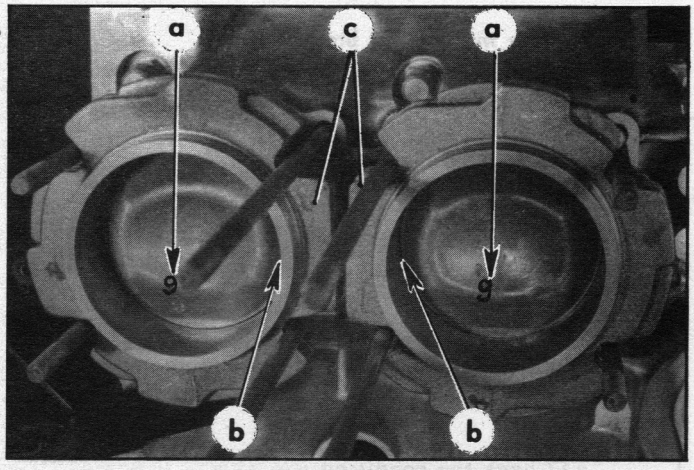

7995

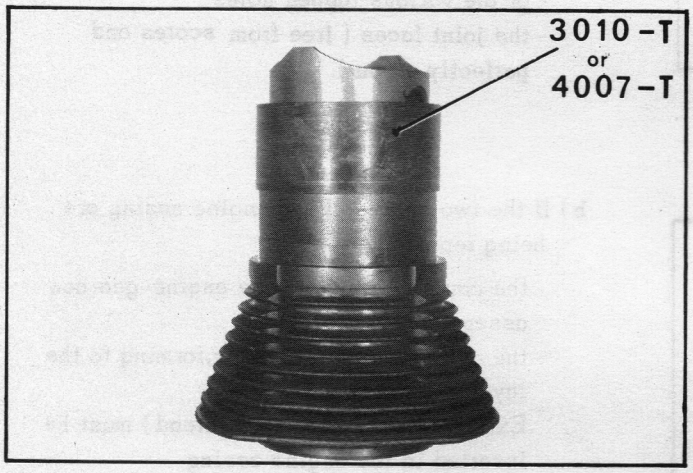

11045

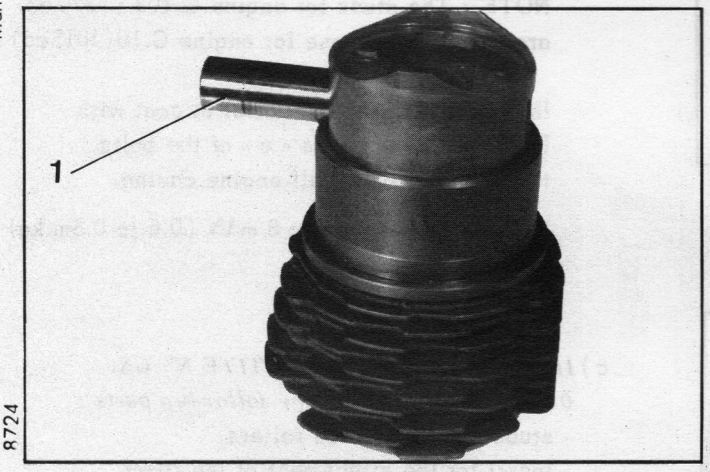

8724

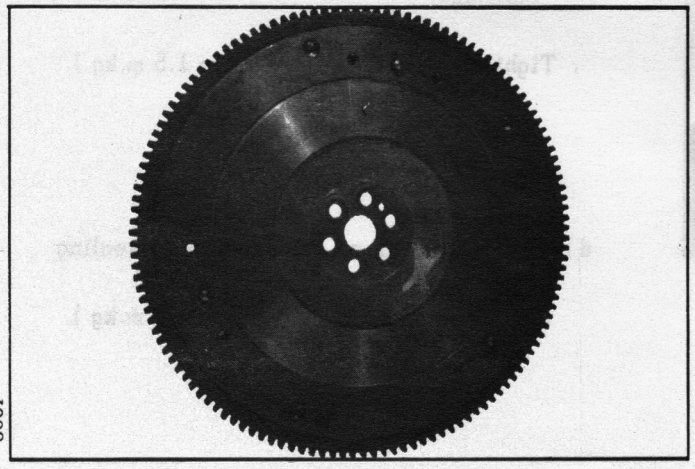

8002

Manual 810-2

6. Fit the pistons in the cylinders.

NOTE : Place the pistons in such a way that after fitting on the connecting rods, the figure at « a » (compression ratio : 9) is legible in situ.

a) Before fitting the pistons :
Insert the gudgeon pin circlip on the same side « b » as the fins « c ».
Position the piston ring gap at 120°.

b) Fit the pistons in the corresponding cylinders (marked when dismantling).
Use a 3010-T *(engine 1015 cc)* or 4007-T *(engine 1220 cc)* ring fixture: insert each piston in the lower part of the cylinder.

c) Partly insert the gudgeon pin (1) (oiled beforehand) into the boss (circlip not yet fitted) so as to provide a gap to enable the conrod small end to be fitted.

7. Prepare the oil pump :

Check that the sealing faces of the oil pump body are not damaged or scored (engine casing side and cover side).

8. Replace the starter ring (if necessary) :

Drive out the ring with a mallet.
Clean the area of the ring which bears against the flywheel.
Heat the ring with a blow torch, moving it round the whole time to ensure an even expansion.
(around 200 to 250° C, colour : straw yellow).

Offer up the ring, with the teeth entry towards the gearbox.

Measure the run-out on the starter ring (0.3 mm maximum).

G.11-3

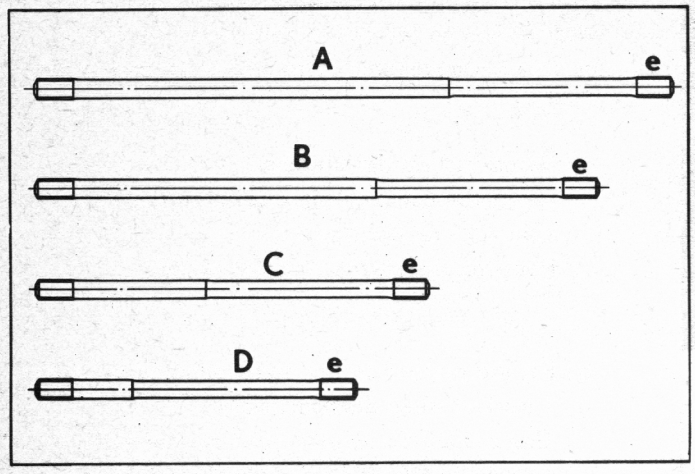

9. Prepare the contact breaker :

Check the condition of the contact points.

Change them if necessary.

10. Prepare the two halves of the engine casing :

a) Check the condition :
- of the various tapped holes,
- the joint faces (free from scores and perfectly clean).

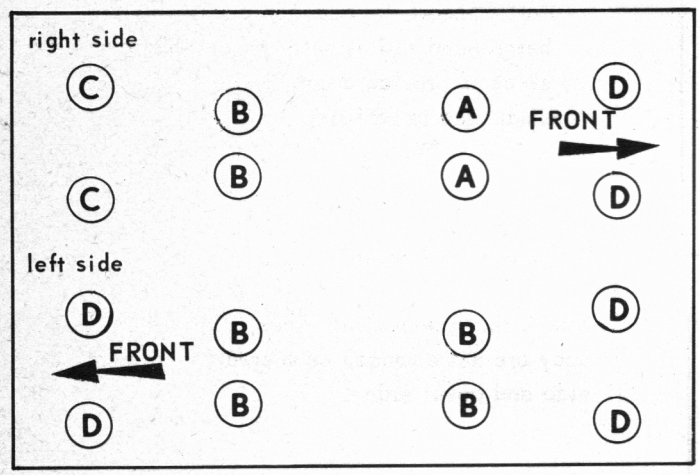

b) If the two halves of the engine casing are being replaced, fit :
- the coupling studs of the engine-gearbox assembly,
- the cylinder head studs conforming to the layout shown opposite,
  Extremity « e » (shortest thread) must be inserted in the engine casing.

NOTE : The studs for engine G.103 (1220 cc) are longer than those for engine G.10 (1015 cc)

IMPORTANT : It is essential to coat with PLASTISOL the ends « e » of the bolts fitted on the R.H. half engine casing.

Tighten the bolts to 6 to 8 mAN (0.6 to 0.8m.kg)

8816

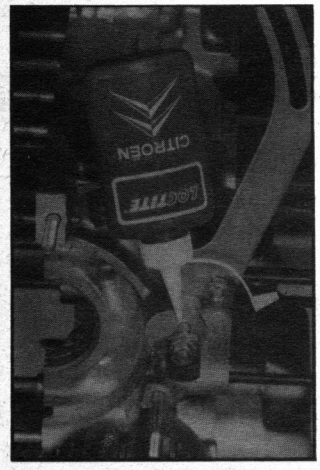

8813

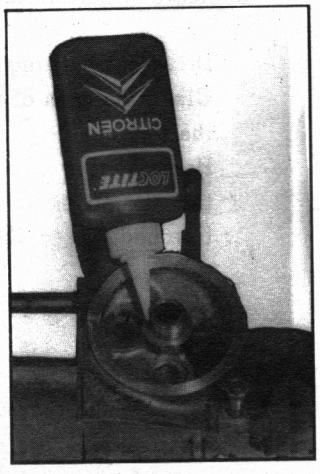

c) *It is essential to use LOCTITE N° GX. 01 459 01 A in fitting the following parts :*
- studs for the tension rollers,
- insert for the attachment of the filter cartridge.

Tighten to 10 to 15 mAN (1 to 1.5 m.kg).

d) **Fit the drain plug (metallo-plastic sealing ring).**
Tighten to 35 to 40 mAN (3.5 to 4 m.kg).

III. FITTING

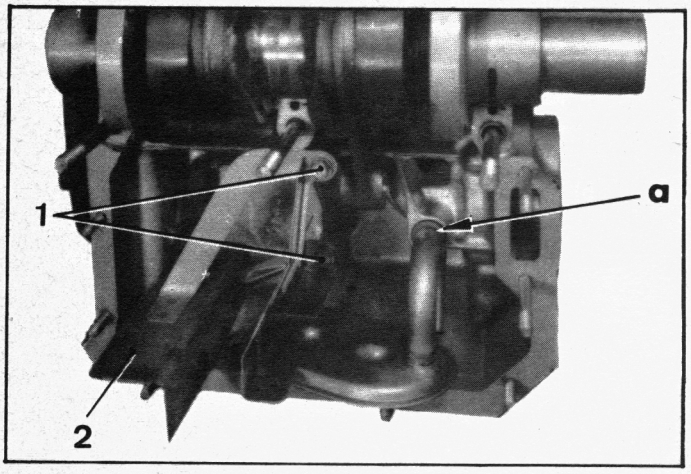

1. Place the half engine casing on stand 2508-T.

2. Fit intake oil strainer :

Fit the seal on the intake pipe of the strainer. *Smear the extremity of the pipe with LOCTITE GX. 01 460 01 A* and insert in its housing « a » on the engine casing. Insert the anti-emulsion shield (2) between the engine casing and the intake strainer. Tighten the securing bolts of the strainer and the anti-emulsion shield to 14 mN (1.4 m.kg).

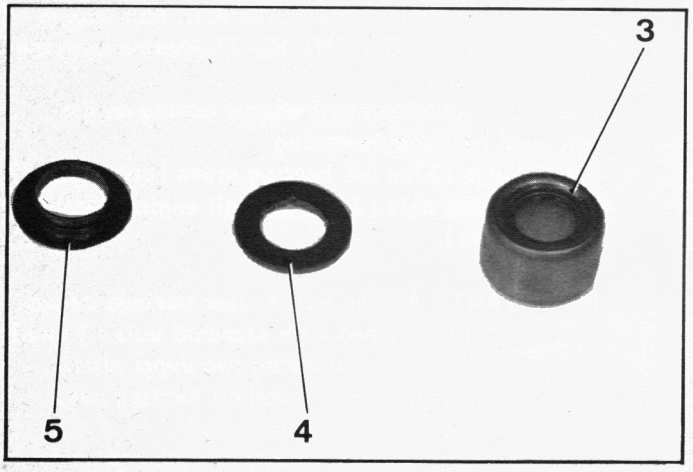

3. Fit the by-pass valves :

a) Cartridge by-pass valve (white mark) :
Fit :
- the valve (3),
- the washer (4).

Secure the cup (5) in the housing by tapping on it lightly, using tool MR. 630-62 / 14.

b) By-pass valve of the cooler (green mark) :
- proceed in the same way as described above.

Smear the plug threading with LOCTITE GX. 01 459 01 A and fit (copper joint). Tighten to 45 to 50 mN (4.5 to 5 m.kg).

4. Fit the plugs (6) and (8) of the lubrification system :

Smear their threads with LOCTITE N° GX. 01 459 01 A and fit them (copper joint). Tighten to 35 to 40 mN (3.5 to 4 m.kg).

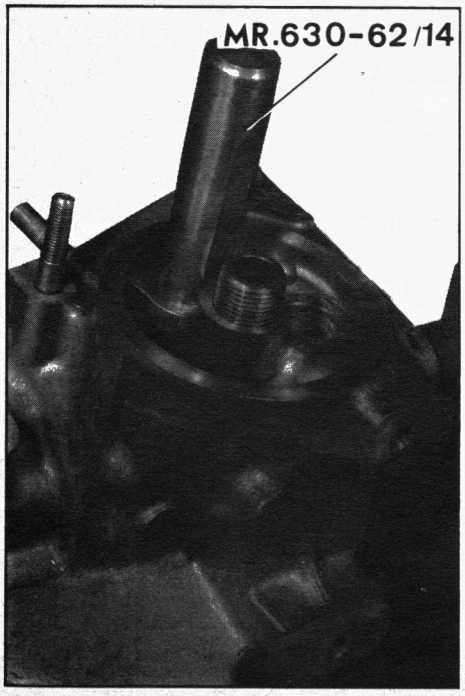

8734

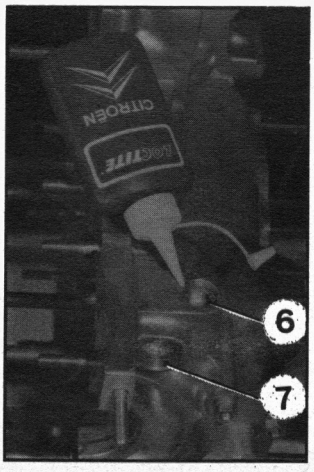

8815

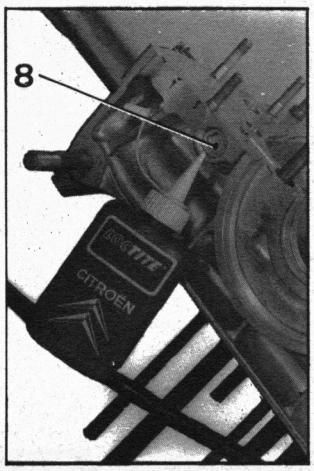

8814

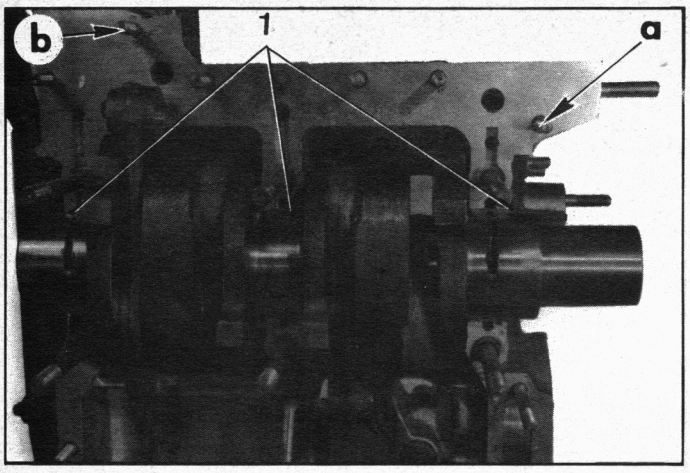

8733

5. Fit the crankshaft :

a) Fit the bearing shells (1) into the left and right-hand casings.
Make sure that the bores of the engine casings are clean.
Make sure that the bearing shells are properly engaged in the locating pegs.

b) Fit the crankshaft.
Using a set of feelers, check the end-float of the crankshaft at the central bearing. This must be :

0.09 to 0.20 mm

(not adjustable).

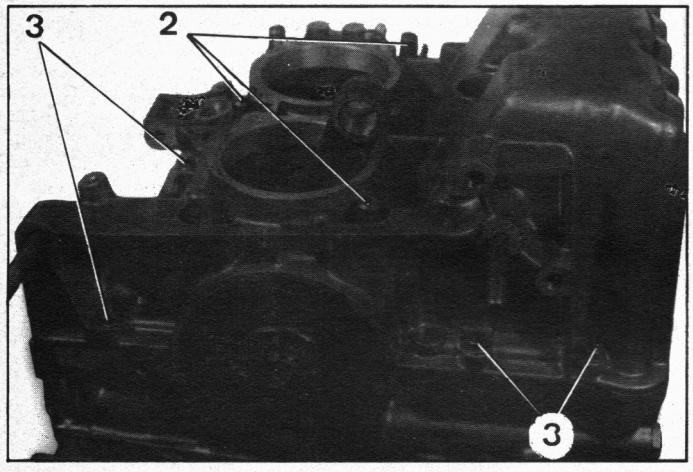

9475

6. Fit the right-hand half engine casing :

Smear the assembly face of the R.H. half engine casing with MASTI-JOINT HD 37 (casing carrying the oil circuit).
Place the right-hand half engine casing on the left-hand half engine casing.
Fit the nuts (2)on the bearing studs (copper seal).
Fit the fixing nuts (3) of the half engine casings (flat washer).

IMPORTANT : All the half engine casings assembly studs are equipped with standard nuts (3) with the exception of the following two upper studs :
- in « a » next to front crankshaft bearing seal,
- in « b » next to oil pressure switch.

This two studs must be equipped with cap nuts N° GX 09 245 01 A.

Tighten the nuts (2) to 34 to 45 mAN (3.4 to 4,5 m.kg).
Tighten the nuts (3) to 12 to 15 mAN (1.2 to 1.5 m.kg)

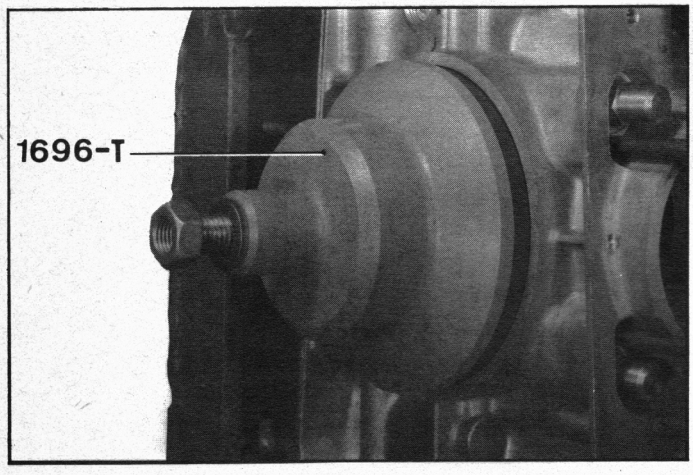

8996

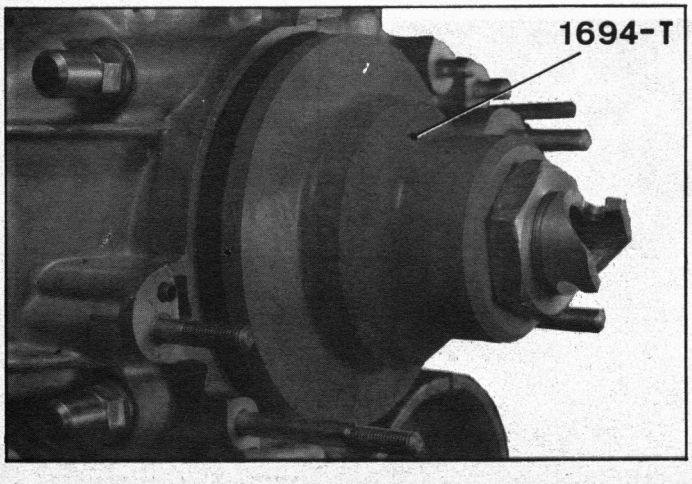

7. Fit the front and rear bearing seals :

a) Oil the lip of the rear seal and fit it using tool 1696-T.

b) Oil the lip of the front seal and fit it by means of tool 1694-T.
NOTE : Fit only seals sold by the Replacement Parts Department.
IMPORTANT :
The seals must be renewed after each engine dismantling operation.
Never fit them before assembling the half engine casings as this would crush the seals and cause oil leakage.

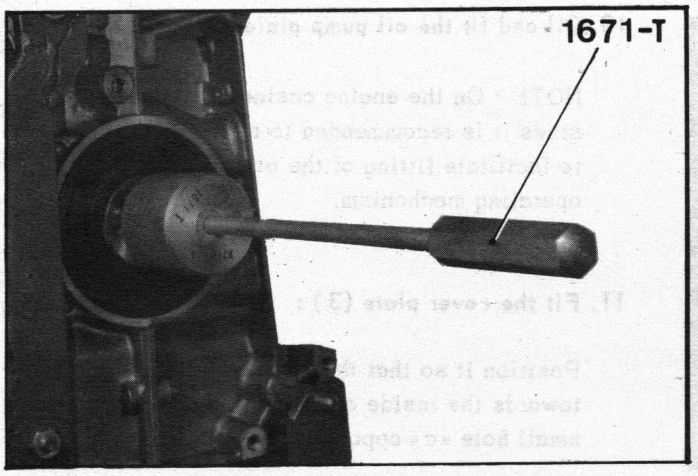

9547

8. If necessary, replace the centring bush of the main shaft in the crankshaft :

a) Remove it with the aid of extractor 1671-T (equipped with expanding end-piece of 12 mm in diameter).

b) Fit the bush :
Immerse this bush for about an hour in engine oil at ambient temperature.
Allow it to drip.
It must be recessed by 5 mm in relation to the crankshaft shoulder.
Use mandrel 3052-T bis to meet this requirement.
(After fitting the bush, free the mandrel with the help of its central screw in « a »).

c) Fit the seal (2).
Position the seal : the face bearing the manufacturer's mark directed towards the outside of the engine.

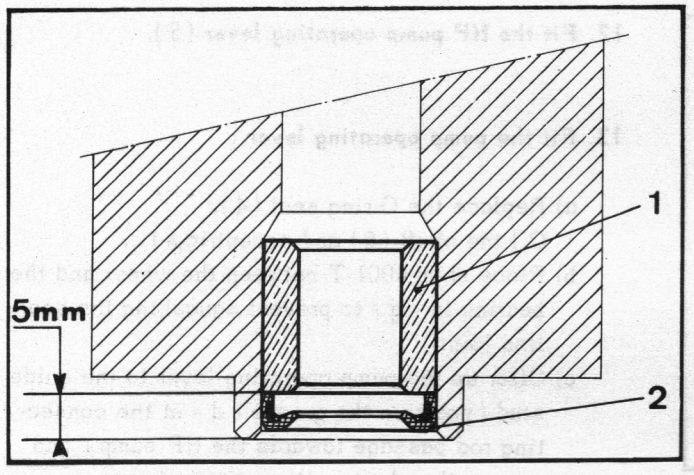

A. 11.1

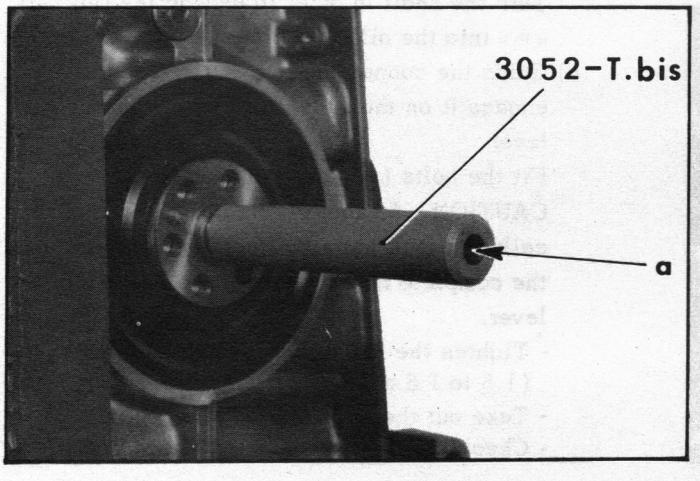

9531

Manual 810-2

9. Fit the relief valve :

Fit :
- the cup (9) (the lugs « b » towards the bottom of the housing),
- the jacket (7),
- the springs (8),
- the piston (6) (after having oiled it and the guide « c » on the spring side),
- the spring washer (5),
- the washer (4),
- the circlip (3).

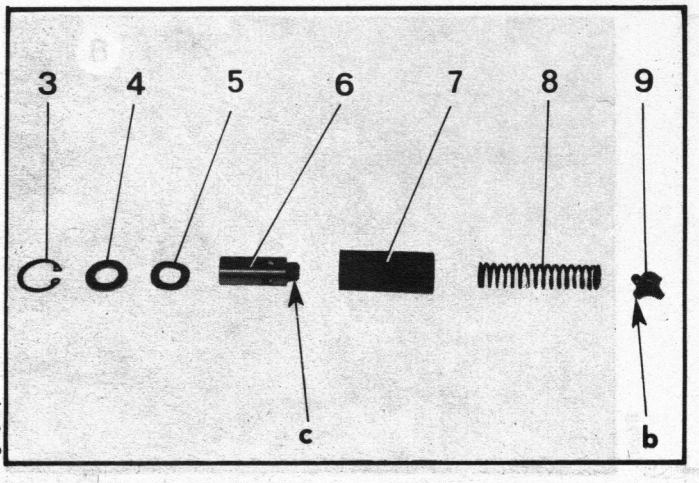

8731

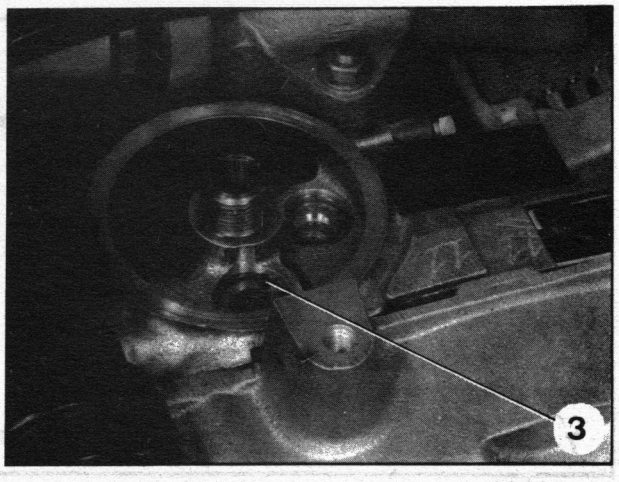

7939

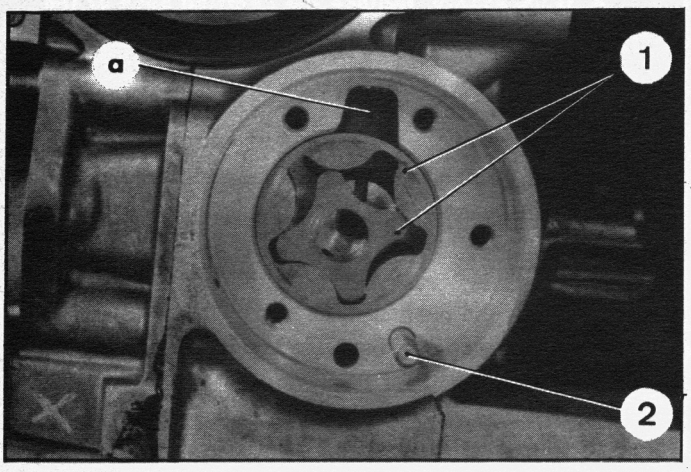

8000

10. Oil and fit the oil pump pinions :

NOTE : On the engine casings without guide studs it is recommended to temporarily fit them to facilitate fitting of the oil pump plate and operating mechanism.

11. Fit the cover plate (3) :

Position it so that the cavities « b » are place towards the inside of the engine casing and the small hole «c» opposite cavity «a» (compression).

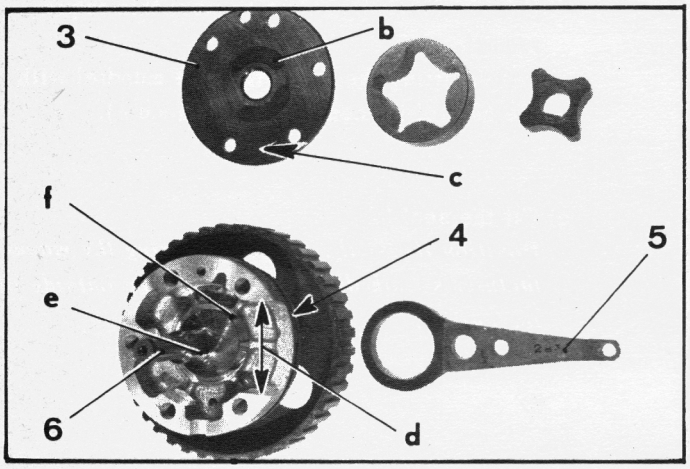

8001

12. Fit the HP pump operating lever (5).

13. Fit the pump operating lever :

a) Replace the O-ring seal (4).
Oil the shaft (6) and eccentric « f ».

b) Place shim 4001-T between the wheel and the bearing in « g » to prevent squashing the sealing joint.

c) Offer up the pump operating lever to the guide stud (position the groove « d » of the connecting rod passage towards the HP pump) and engage the shaft in the central pinion.
Turn the shaft in order to engage the flat part « e » into the oil pump pinion.

d) Guide the connecting rod (5) in order to engage it on the eccentric « f » of the control lever.
Fit the bolts (8) (contact washer).
CAUTION : Alternately tighten the diametrically opposed bolts by fractions of a turn until the complete fitting of the pump operating lever.
- Tighten the bolts (8) to 15 to 18.5 mAN (1.5 to 1.8 m.kg).
- Take out the shim 4001-T.
- Check that the pump control turns freely.

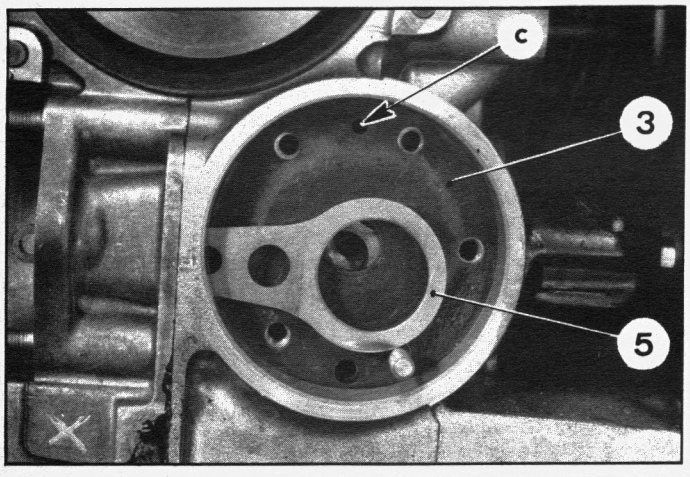

7999

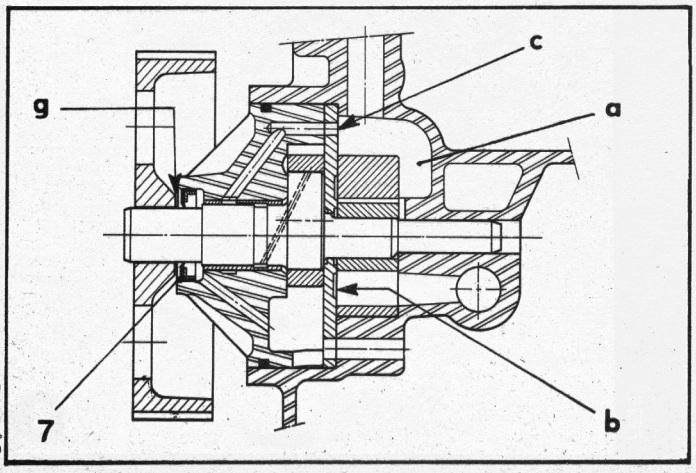

G. 22-2

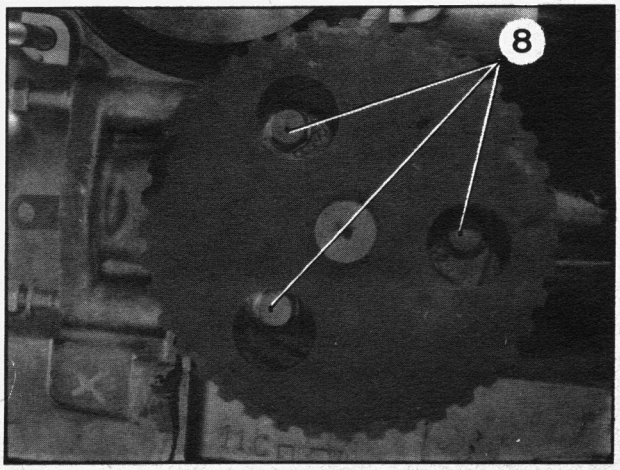

7998

8010

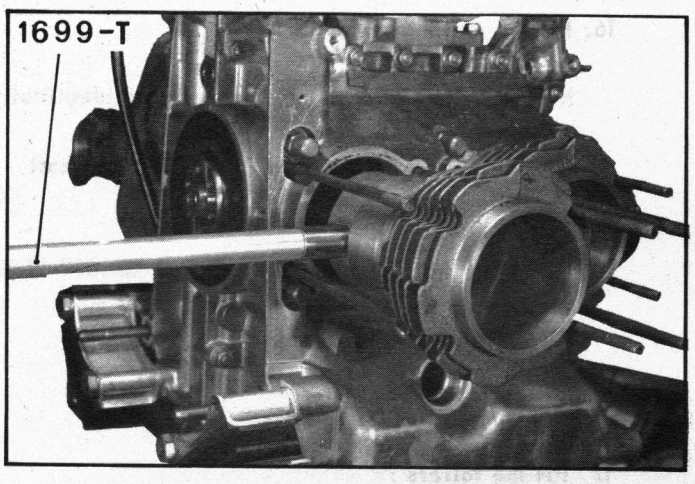

8036

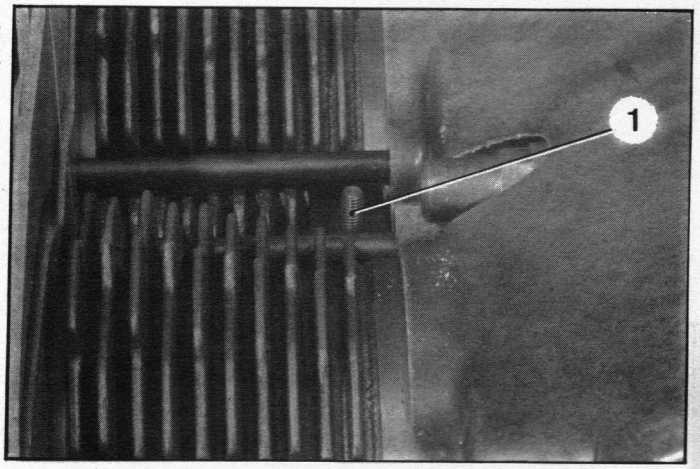

Manual 810-2

9033

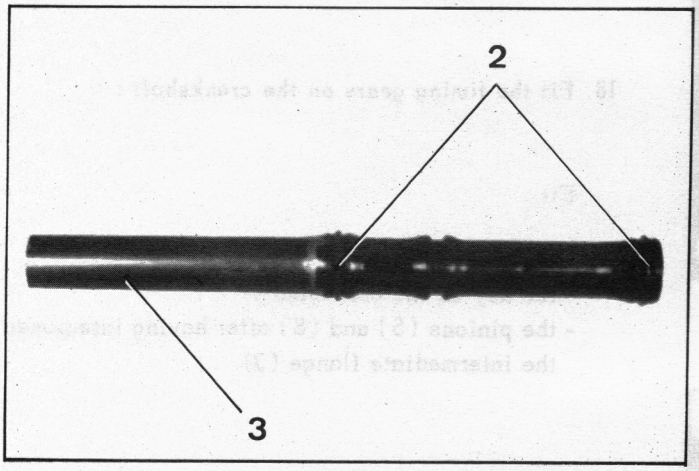

ORDER OF TIGHTENING THE NUTS

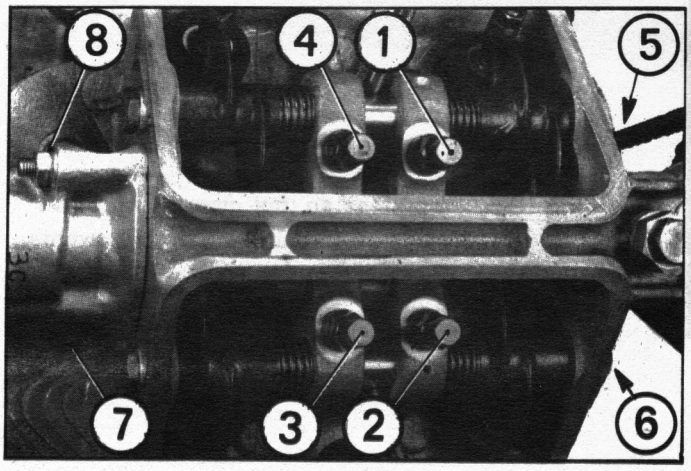

7979

14. Fit the cylinders :

a) Oil the small ends of the connecting rod.

Offer up the cylinder/piston assembly to the connecting rods.

CAUTION : Direction of fitting (see pages 18 and 19, paragraphs 5 and 6).

Complete fitting of the gudgeon pin with the aid of mandrel 1699-T.

b) Fit the gudgeon pin circlips. Ensure that they are fully engaged in their grooves.

c) Oil the pistons and the inside of the cylinders.

Completely engage the cylinders.

Engine G.103 (1220 cc).:

Fit the pipes beneath the cylinders.

15. Fit the cylinders heads :

NOTE : Before tightening the R.H. cylinder head, position the cylinders to allow the brake unit to be fitted.

a) Lubricate the O-rings (2) of the oil return engine tubes (3) with engine oil.
Engage the longest ends into their engine casing housings.

b) Turn the crankshaft to bring the pistons to their mid-stroke position.

Offer up the cylinder head while guiding the oil return tubes (3).

Fit and screw up the nuts by hand (thick flat washer) and then temporarily tighten them to 8 to 10 mΛN (0.8 to 1 m.kg), beginning at the centre.

c) Tighten the cylinder heads :

Observe the tightening order shown in the illustration opposite :

12 mm nuts A/F = 16 to 18 mΛN
(1.6 to 1.8 m.kg)

13 mm nuts A/F = 20 to 25 mΛN
(2 to 2.5 m.kg).

Extended socket 3094-T or 4006-T.D.

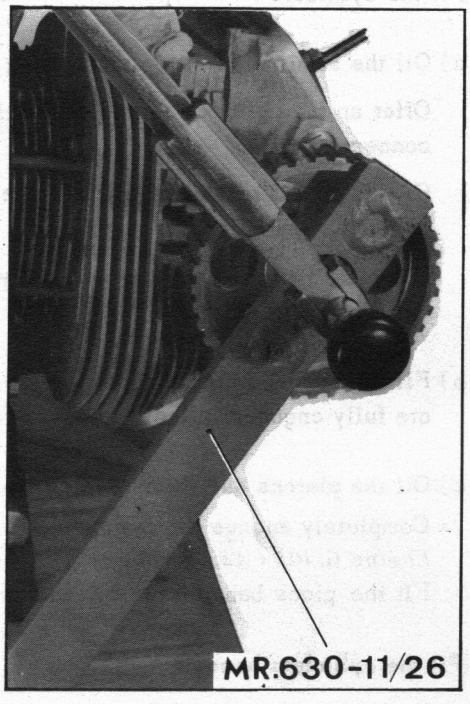

8029

16. Fit the camshaft wheels :

NOTE : The two camshafts wheels are identical.

Engage one wheel on the end of each camshaft (setting pin).

Block the wheel with the aid of tool MR.630-11/26 and tighten the nut (flat washer) to 82 mΛN (8.2 m.kg) (torque wrench).

17. Fit the rollers :

NOTE : The two rollers are identical.

a) If necessary, engage the Mecanindus guide pins (1) in their housings.

b) Offer up the rollers (6) (support plate (2) outwards).

Fit the nuts (7) (contact washer) without tightening them.

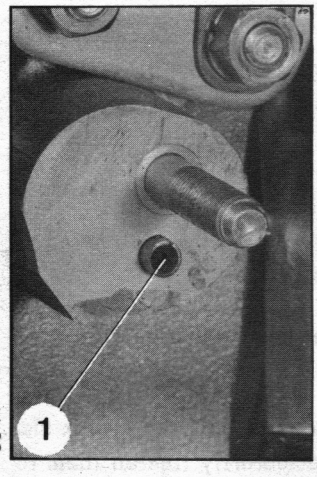

8841

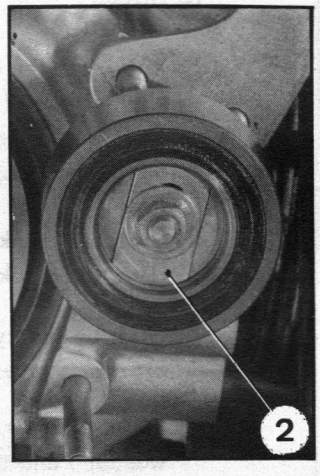

8030

18. Fit the timing gears on the crankshaft :

Fit :

- the protective plate,
- the key on the crankshaft,
- the pinions (5) and (8) after having interposed the intermediate flange (3).

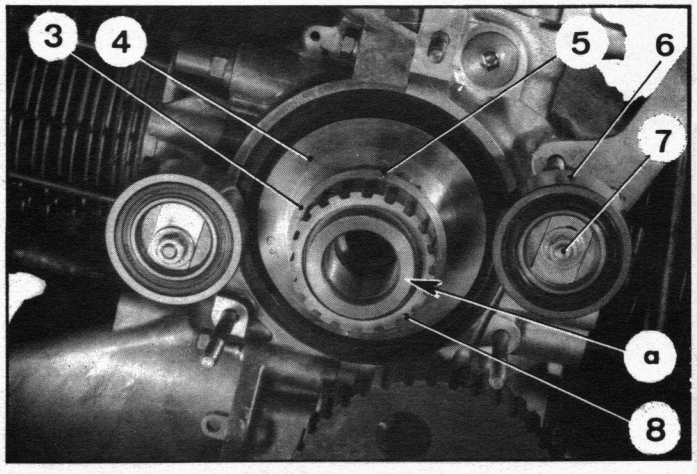

8030

CAUTION :

Position the pinions so that groove « a » is placed outwards on the pinion (8) and towards the crankcase on the pinion (5).

8841

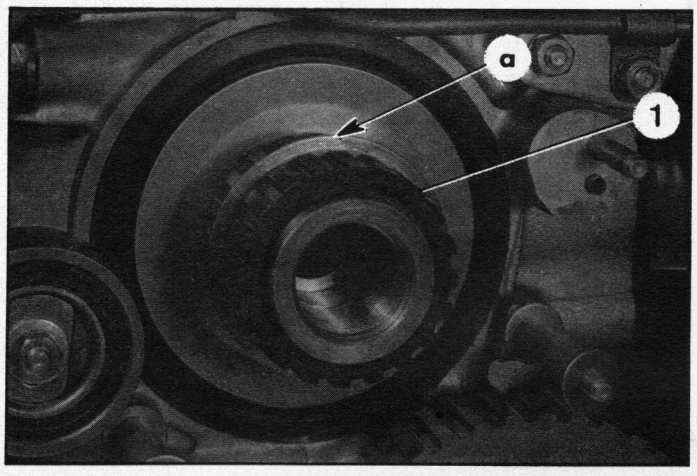

19. Fit the timing belts ;

IMPORTANT : Before fitting, make sure that the belts, pinions and rollers show no trace of grease or oil.

NOTE : On a given engine, fit belts from the same supplier.

a) Turn the engine to bring the marking « a » (located on the intermediate flange toward the top of the centre line of the engine). Position the marks « b », « c » and « d » of the camshaft wheels and the oil pump as shown in the figure.

b) Compress the rollers (direction of the arrows). Tighten the nuts (2) and (4).

c) Fit the right belt so that its markings coincide with the markings « a » and « d » in such a way that :

ad = 42 steps *tensioner side* (Engine G.10)
ad = 43 steps *tensioner side* (Engine G.103).
(in this position, the marking « d » is placed downwards).

Manual 810.2

8046

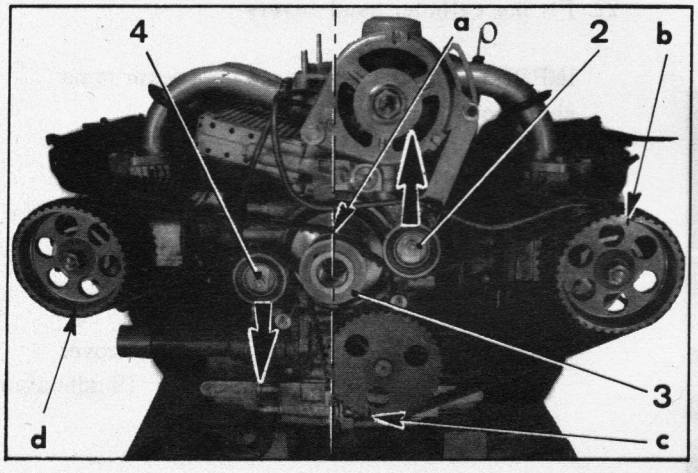

d) Fit the left, in marking coincide :
- the white markings with markings « a » and « b »,
- the yellow marking with marking « c ».

In that position :
ab = 32 steps (Engine G.10)
ab = 33 steps (Engine G.103)
ac = 25 steps (*For the two types of engines*)

e) Fit the outer flange (3).

f) Release the rollers and retighten nuts (2) and (4).

8046

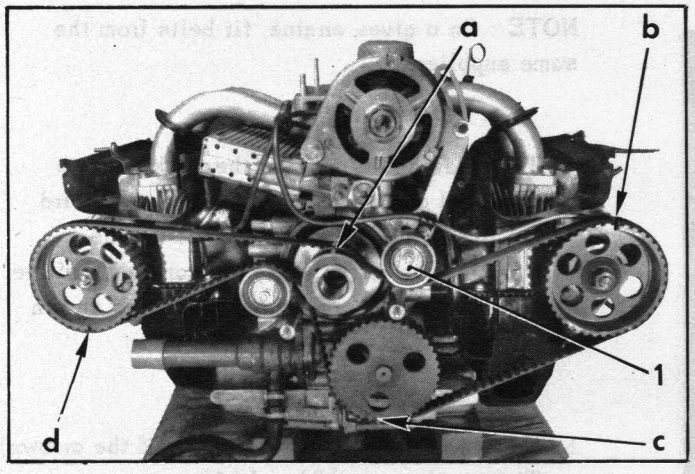

20. Adjust the valve clearance :

Successively adjust each of the rocker arms in the following manner :

a) Turn the engine so that the heel of the rocker to be adjusted is on the back of the corresponding cam (valve completely closed).

b) *Adjust the clearance between the heel of the rocker and the back of the corresponding cam in « e ».*
Intake - Exhaust = 0.20 mm.

21. Tension the belts :

With the crankshaft marking and camshaft wheels placed as in the illustration in the margin, turn the crankshaft 90° in its normal working direction.
Loosen nut (1) of the left-hand roller to release it and retighten it to 18.5 mΛN (1.8 m.kg).
Turn the crankshaft one turn in its normal working direction and carry out the same operation on the right-hand.

8362

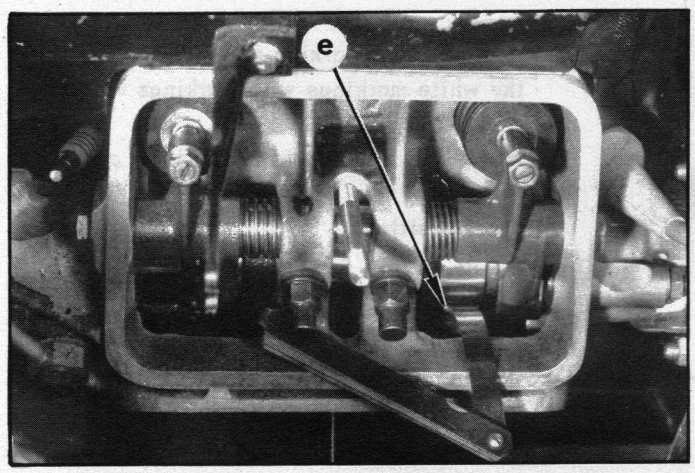

22. Fit the cylinder head covers :

IMPORTANT : Carefully oil the rocker arms, shafts and cams.

a) Ensure that there is no roughness on the joint faces which must be clean and dry.

b) Stick the seal on the cylinder head cover (BOSTIK 1400 or MINNESOTA F.19 adhesive)
Centre the cylinder head covers.

NOTE : The lower and upper cylinder head covers are different. Take care with the direction of fitting.
The cylinder head cover containing the filling orifice is fitted on the left-hand side.

CAUTION : Incorrect fitting of the gaskets, a poor centring or insufficient tightening of the fixing nut could lead to a total loss of the engine oil.

Tighten the nut to 8 to 10 mΛN (0.8 to 10 m.kg).

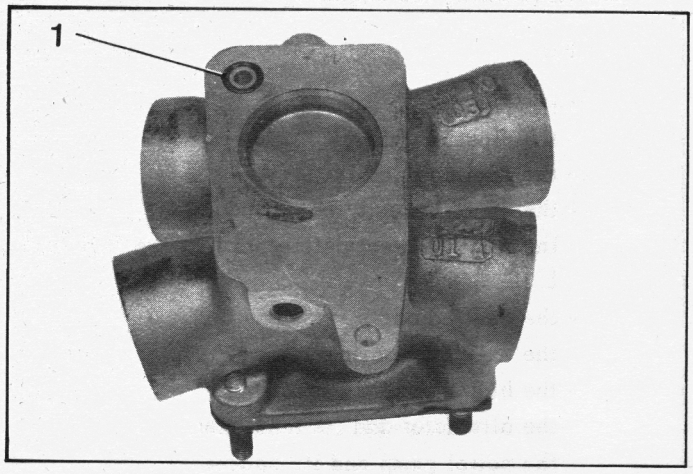

23. Fit the exhaust heater box of the carburettor or the pipe-intake manifold and carburettor assembly

Fit the O-ring (1) in its housing.

Fit the box (2) or the pipe-intake manifold and carburettor assembly on the engine casing.

Tighten the nut (3) and bolt (4) to 18.5 mAN (1.8 m.kg) (contact washer).

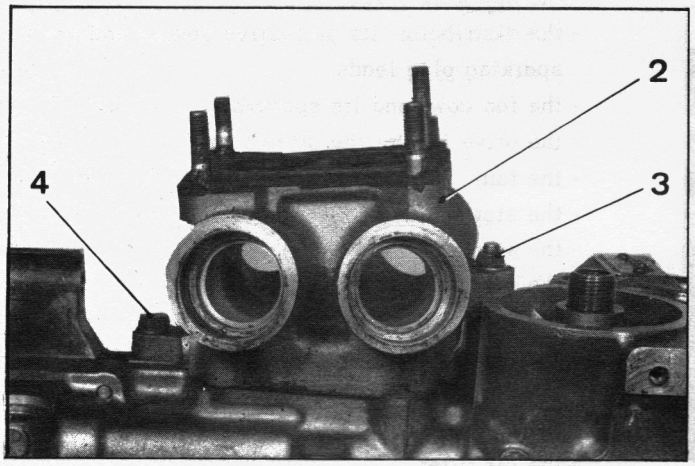

24. Fit the lubrication piping :

Fit the union screws (5) for the cylinder head lubrication pipes (replace the seals).

Tighten the union screws to 18 to 20 mAN (1.8 to 2 m.kg).

Fit the oil pressure switch (replace the seal) and tighten it to 22 mAN (2.2 m.kg).

IMPORTANT : Check that there is a clearance of 5 mm minimum between the piping and the camshaft wheels.

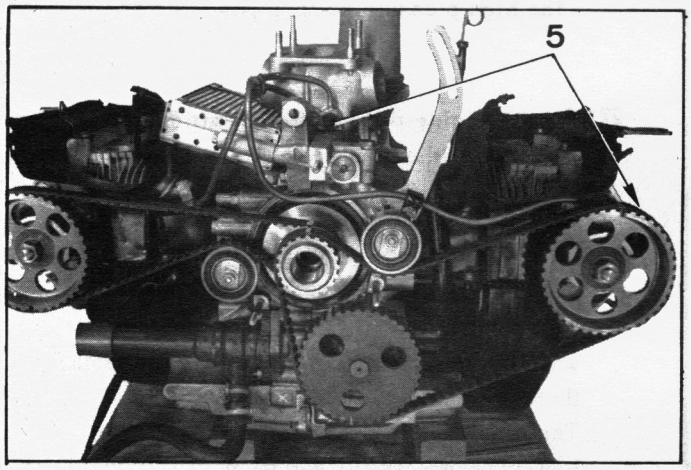

25. Fit the oil cartridge :

Oil the seal.

Fit the cartridge by hand until it comes into contact with the engine.

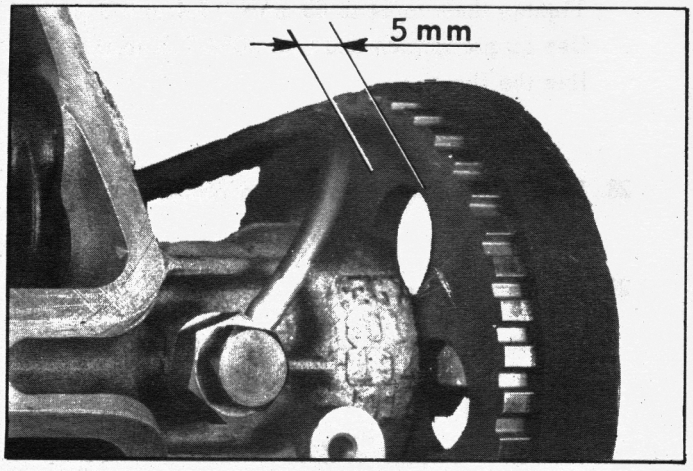

Then tighten it 1/2 to 3/4 of a turn (wrench 1683-T).

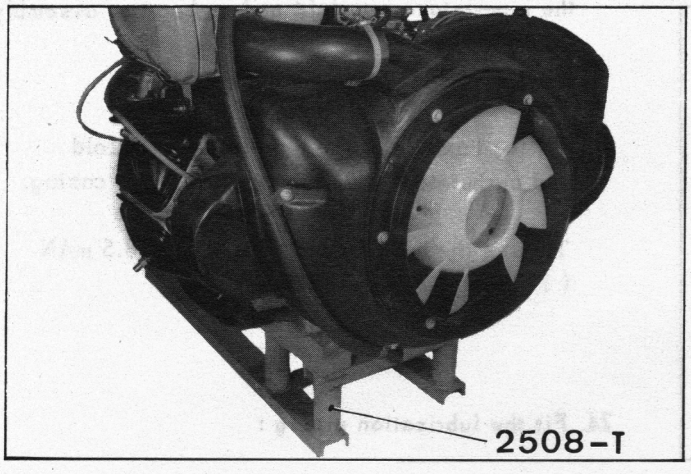

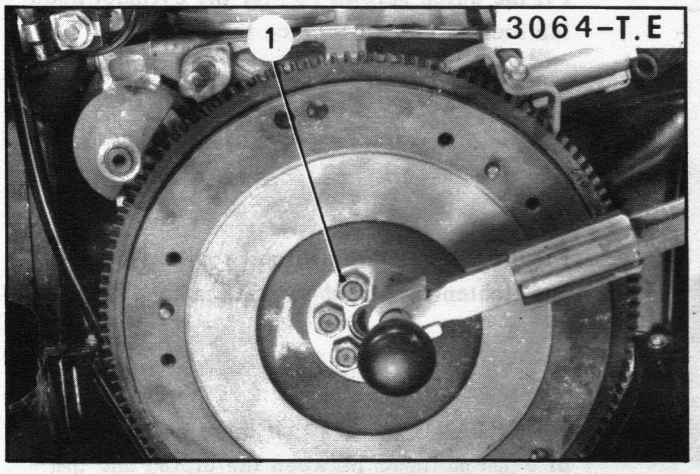

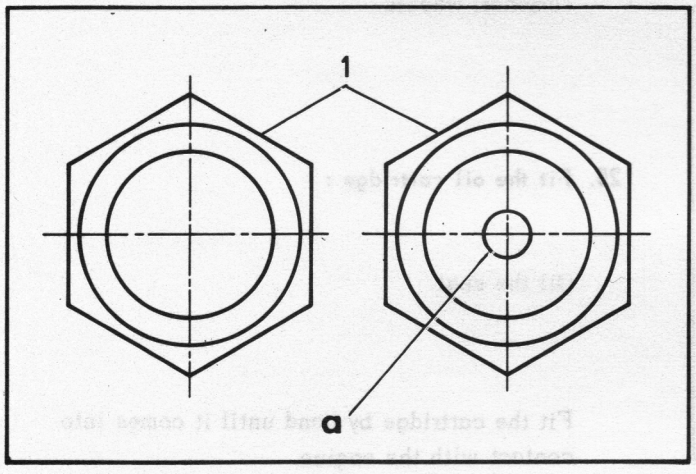

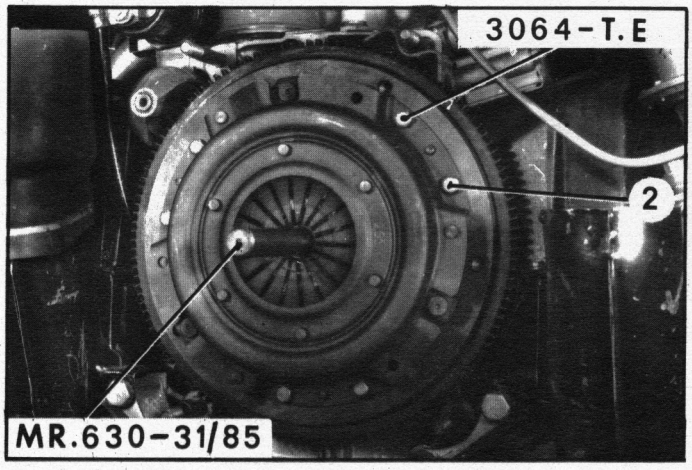

26. Assembling the engine :

Fit :

- the breather,
- the dipstick tube,
- the cooling ducts,
- the ducts beneath the cylinders,
- the front and rear deflectors (on the R.H. and L.H. side),
- the heating ducts,
- the exhaust manifold,
- the high pressure pump,
- the alternator and its tensioner,
- the petrol pump and its spacer,
- the sparking plugs,
- the distributor, its protective spacer and the sparking plug leads,
- the fan cowl and its spacers,
- the drive belt of the alternator,
- the fan,
- the starter dog,
- the starter,
- the oil cooler,
- the inlet pipes *(according to fitting)*
- the upper duct covers,
- the carburettor and its spacer *(according to fitting)*.
- the air filter,
- the high pressure pump pipes.

27. Fit the engine-flywheel (conventional clutch system) or the diaphragm (torque converter) :

IMPORTANT : Fit new fixing bolts (1) after each dismantling. It is essential that the heads of the bolts bear the mark « a » as shown in figure opposite.
The flywheel fixing bolts are fitted face and threads oiled.
The diaphragm fixing bolts are fitted with LOCTITE N° GX. 01 460 01 A.
Tighten them to 64 to 69 mΛN (6.4 to 6.9 m.kg)
Use torque wrench and tool 3064-T.E to immobilize the flywheel.

28. Remove the engine from stand 2508-T.

29. Fit the clutch mechanism :

Fit the clutch disc and the mechanism.
Centre the disc with the aid of mandrel MR. 630-31/85.
Tighten the bolts (2) to 18.5 mΛN (1.8 m.kg)
(Shakeproof washer).

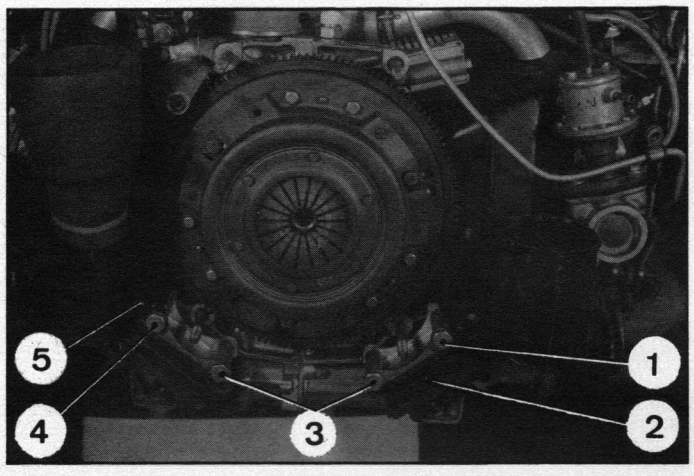

30. Fit the flexible mountings :

NOTE : The flexible mountings must be of the same manufacturer.

Fit the mountings (2).

Fit the fixing bolts (3) by placing :
- a flat washer under the heads of bolts (1) and (3),
- a flat washer and the plate (5) under the head of the bolt (4).

Tighten the bolts to 50 to 60 mΛN (5 to 6 m.kg)

31. Fit the two centring bushes on the engine-gearbox coupling studs.

REMARKS :

After fitting the engine on the vehicle :

1°) Top up with oil.
2°) Adjust the strobe setting.
3°) Check the oil pressure.
4°) Adjust the idling speed.

STRIPPING DOWN AND ASSEMBLING AN ENGINE

(For exchange or repairs)

Nomenclature of cooling ducts
Engine G.10 (1015 cc)

9096

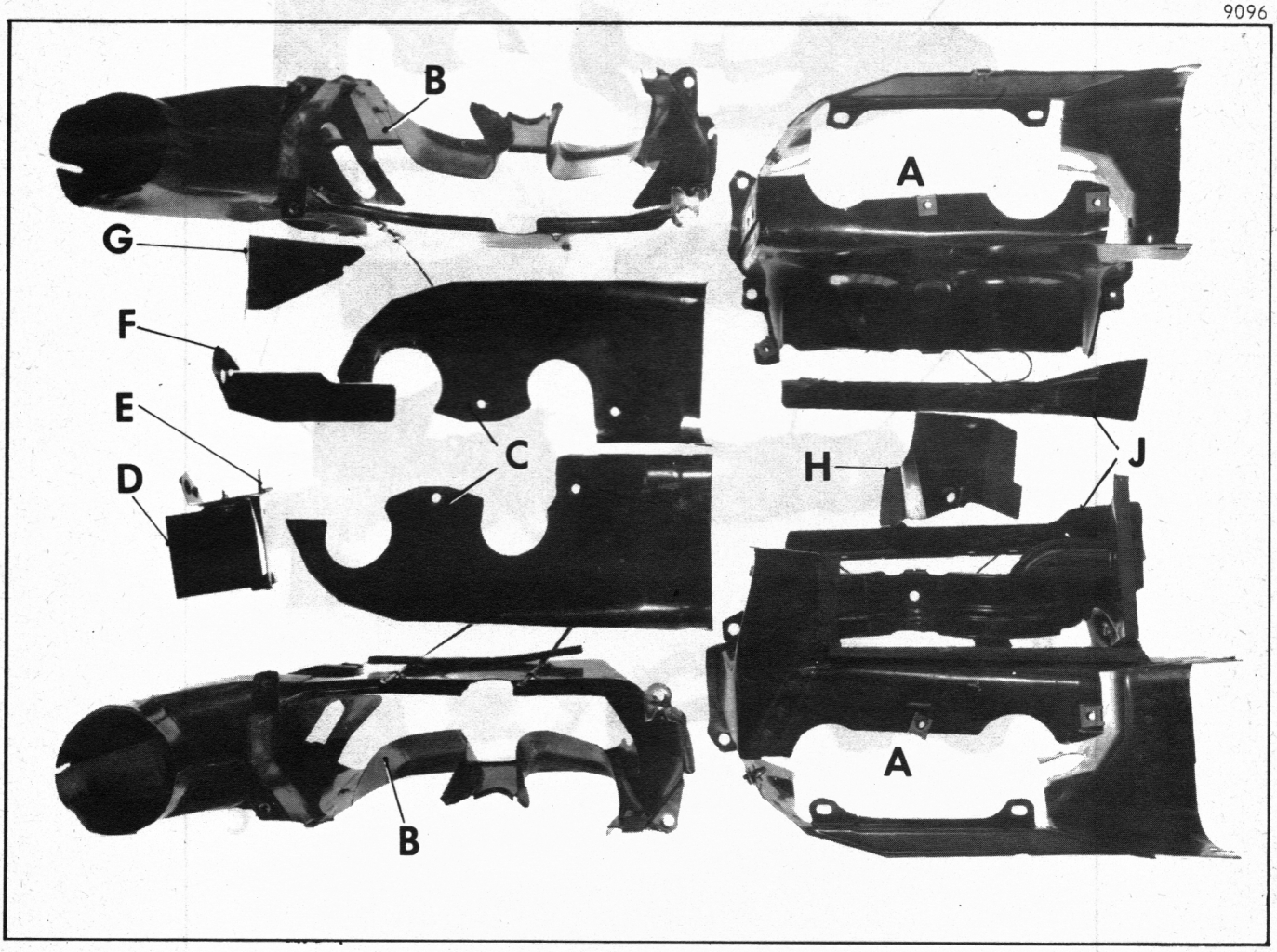

A - Cooling ducts

B - Heating ducts

C - Duct covers

D - Deflector

E - Right-hand mounting plate

F - Left-hand mounting plate

G - Screen

H - Deflector, fitted towards fan cowl

J - Ducts under cylinders

Nomenclature of cooling ducts
Engine G.103 (1220 cc)

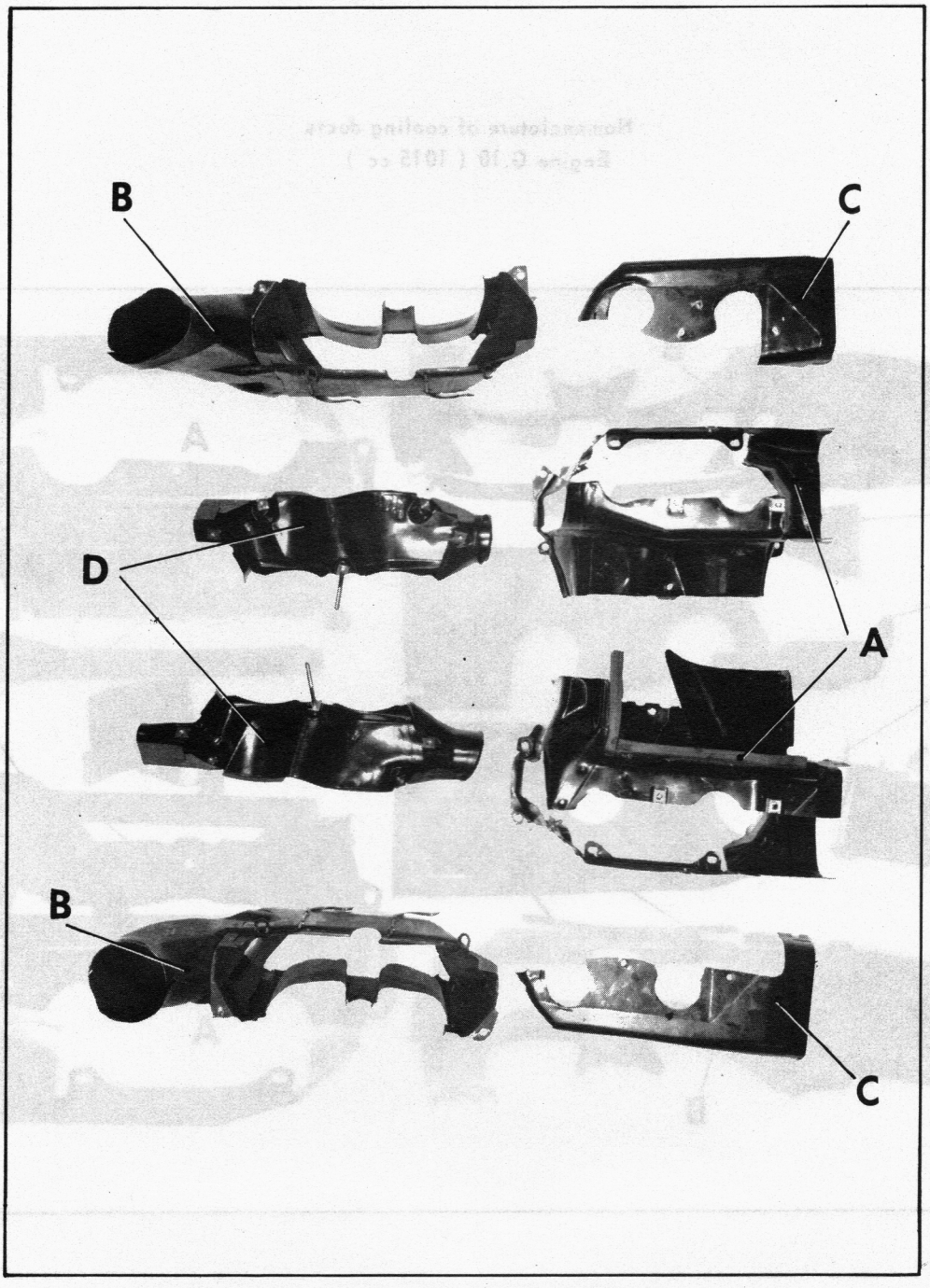

A - Cooling ducts

B - Heating ducts

C - Duct covers

D - Ducts under cylinders

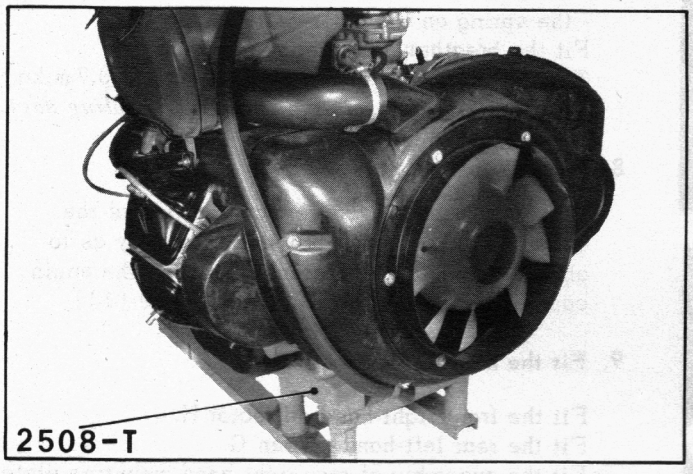

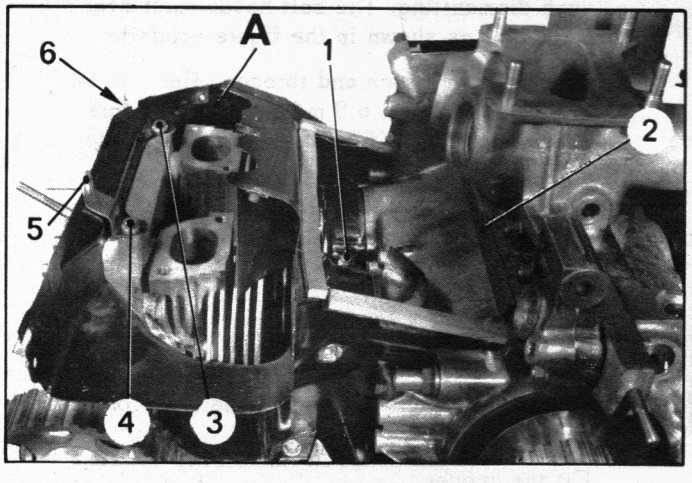

STRIPPING

1. Remove :
   - the clutch mechanism,
   - the flexible mountings.
2. Place the engine on stand 2508-T.
   Drain the oil.
3. **Remove :**
   - the high pressure pump pipes,
   - the air filter,
   - the carburettor and its spacer or the carburettor inlet chamber and pipe assembly,
   - the upper duct covers,
   - the induction pipes *(vehicles introduced up to August 30, 1972).*
   - the oil cooler,
   - the air intake rubber seal for the cooler,
   - the starter,
   - the starting handle dog,
   - the fan,
   - the drive belt of the alternator,
   - the fan cowl and its spacers,
   - the distributor, its protective spacer and the sparking plug leads,
   - the sparking plugs,
   - the petrol pump and its spacer,
   - the fixing studs of the petrol pump,
   - the alternator and its tensioning rod,
   - the oil pressure switch,
   - the oil temperature thermal switch,
   - the high pressure pump,
   - the exhaust pipes,
   - the pipe fixing bolts,
   - the engine flywheel,
   - the heating pipes,
   - the front and rear deflectors (right and left hand side)
   - the ducts under the cylinders,
   - the cooling ducts,
   - the dipstick tube,
   - the breather pipe,
   - the assembly bolts for the engine-gearbox,

   NOTE : *Engine G.103 (1220 cc)*
   The under cylinder pipes D are removed for repairs only : they must be refitted prior to the fitting of the cylinder heads.
4. Clean the parts.

ASSEMBLY

5. Fit the assembly fixing studs of the engine-gearbox.
   Tighten the studs to 10 to 15 mAN (1 to 1.5 m.kg).
6. **Fit the cooling ducts A :**
   a) *Left-hand side :*
      Fix the duct on the engine casing.
   b) *Right-hand side :*
      Fit the brake unit (1) *(Engine G.10 (1015 cc)*
      Fix the duct on the right-hand cylinder head.
      Fit the bolt (3) (contact washer) in interposing (under the duct plate) the rear support (6) of the air filter.
      Fit the bolt (4) (contact washer) in interposing (under the duct plate) the front support (5) of the air filter *(Engine G.10, 1015 cc only).*
      Tighten the bolts.
      Stick the seal (2) to the engine casing (BOSTIK 1410 or MINNESOTA).

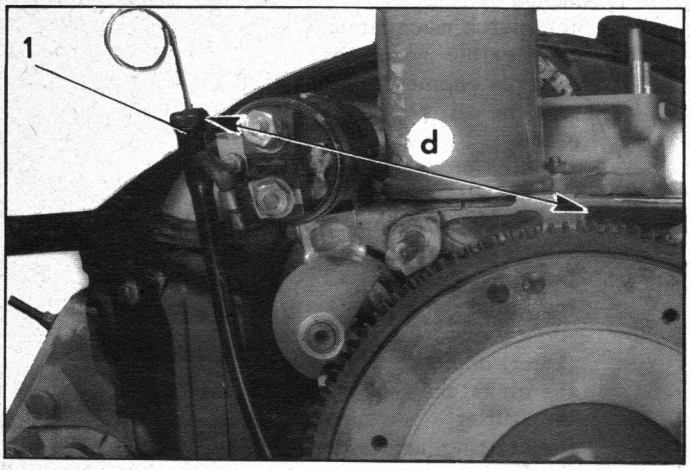

7974

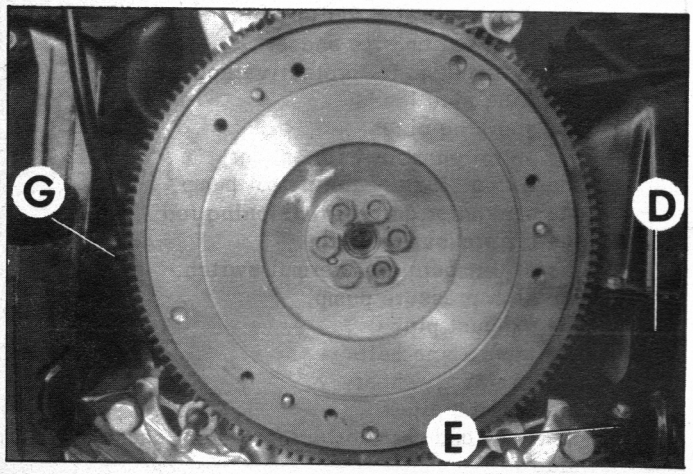

8047

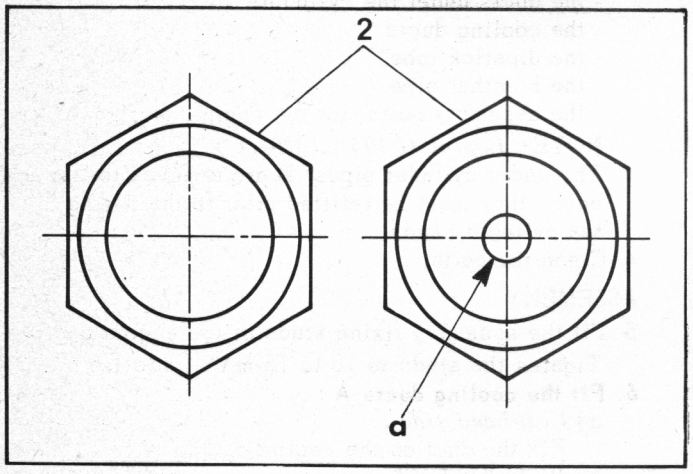

G. 12-1

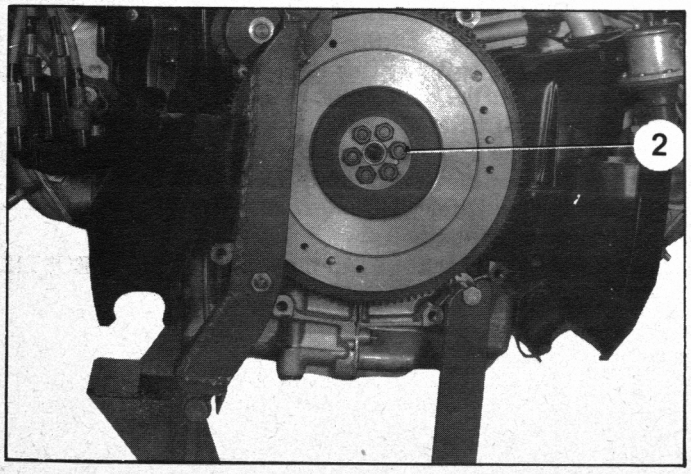

8649

7. Fit the breather tube :

Check the joint face on the engine casing.
Stick the seal to the breather tube (BOSTIK 1410 or MINNESOTA adhesive).
Fit the deflector onto the breather, the rounded side inwards.
Fit a new seal on the bolt.
Fit :
- the bolt in the breather,
- the spring on the bolt.

Fit the breather on the engine casing.
Tighten the screw to 5 to 7 mΛN (0.5 to 0.7 m.kg)
The breather pipe must not touch the cooling duct.

8. Fit the dipstick guide :

In fitting, position the concave portion of the guide towards the gearbox in such a way as to obtain d = 220 mm (distance between the engine casings seals and the end of the guide (1)).

9. Fit the heating ducts :

Fit the front right-hand deflector H.
Fit the rear left-hand screen G.
Fit the assembly of rear right-hand mounting plate E and deflector D.
Couple up heating ducts B (Contact washer under all screw heads).

10. Fit the flywheel (conventional clutch) or the diaphragm (torque converter) :

IMPORTANT : Fit new securing bolts (2) after each dismantling. The bolt heads must bear the mark « a » as shown in the figure opposite.

Tighten them (face and threads oiled) to 64 to 69 mΛN (6.4 to 6.9 m.kg). Use a torque wrench and tool 3064-T.E to immobilize the flywheel.

The diaphragm fixing bolts must be fitted with LOCTITE GX. 01 460 01 A.

11. Fit the petrol pump :

Tighten the studs on the bearing (the longest one outwards).

Fit the spacer.

Fit the petrol pump.

Tighten the nuts to 21 mΛN (2.1 m.kg) (contact washer).

12. Fit the distributor :

Fit the distributor protective spacer.

Fit the distributor. Lightly tighten the nuts (contact washer) (adjustment to be performed with the engine fitted on the vehicle).

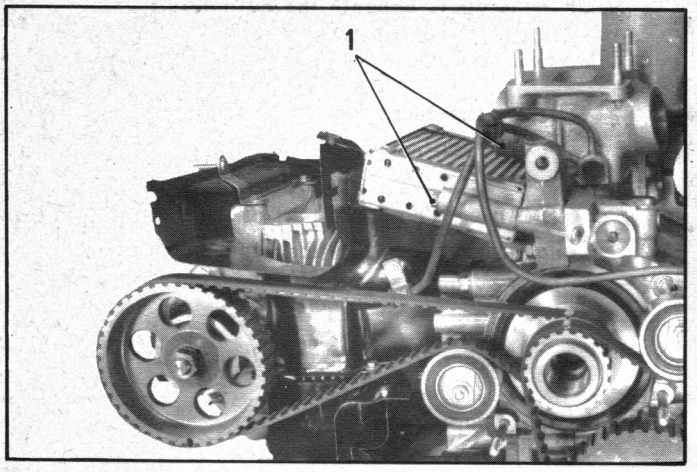

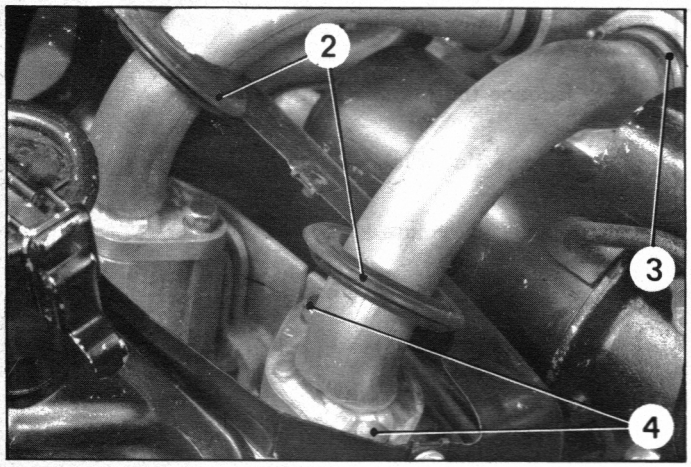

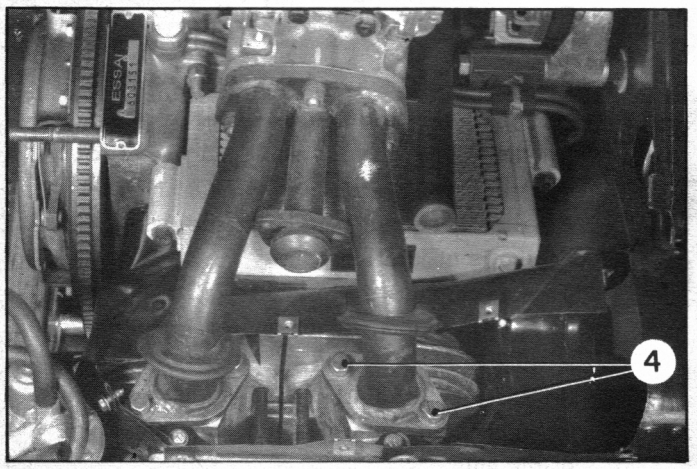

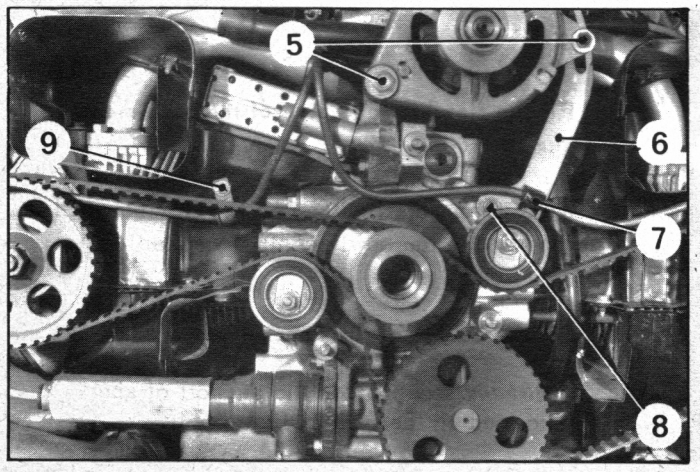

13. Fit the exhaust pipes :
Fit the studs.
Fit new gaskets.
Fit the pipes.
Tighten the nuts to 15 mΛN (1.5 m.kg).

14. Fit the oil pressure switch :
Fit a new seal on the pressure switch, tighten it to 22 mΛN (2.2 m.kg).

15. Fit the oil temperature thermal switch :
Fit a new seal on the union, tighten it to 50 to 55 mΛN (5 to 5.5 m.kg).
Fit a new seal on the thermal switch, tighten it to 25 mΛN (2.5 m.kg).

16. Fit the oil cooler :
Fit new seals on each tube of the cooler.
Fit the cooler.
Tighten the bolts (1) to 18.5 mΛN (1.8 m.kg).

17. Fit the starter :
Fit the starter on its mounting.
Tighten the fixing bolts to 18.5 mΛN (1.8 m.kg) (contact washer).
The longest bolt fits in the upper bore.

18. Fit the inlet pipes or the carburettor inlet chamber and pipe assembly :
a) Fit the rubber closing rings (2) on the pipes (if necessary).
b) Check the condition of the rubber seals and their positions (1 to 2 mm inside the end of the pipe). Smear with tallow. Tighten the collars (3).
c) Engage the pipes in the inlet chamber (if necessary).
Fit the new gaskets, cylinder head side.
CAUTION : Check that the gas passage hole of the seal corresponds with that of the cylinder head.
d) Tighten the bolts (4) to 18.5 mΛN (1.8 m.kg) (thick washer).

19. Fit the high pressure pump.

20. Fit the alternator tensioner (6).

21. Fit the alternator :
Do not tighten the bolts (5) (flat washer under the head of the bolt and nut).

22. Fix the cylinder head lubrication tubes :
Fit the supports (7) and (9).
Interpose a rubber ring between the tube and the support.
Tighten the two fixing bolts (8) of the tensioner (6) and the fixing bolt of the support (9).

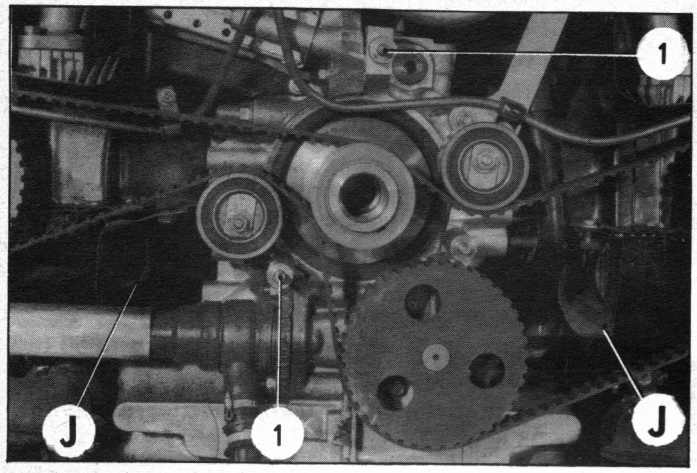

23. Fit the ducts beneath the cylinders :
Engine G 10 (1015 cm3).

Engage the ducts J on the oil return tubes of the cylinder heads.

REMARK : The upper part of the duct must be engaged between the third and fourth cooling fin of the cylinder, cylinder head side.

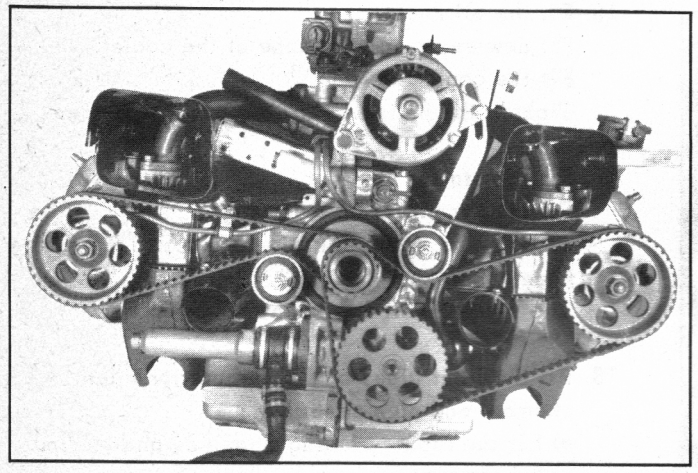

24. Fit the fan cowl :

Insert on each stud (1) a flat washer on each side of the spacer.

Engage the fan cowl on the studs.

Fit the flat washers.

Tighten the nuts (2).

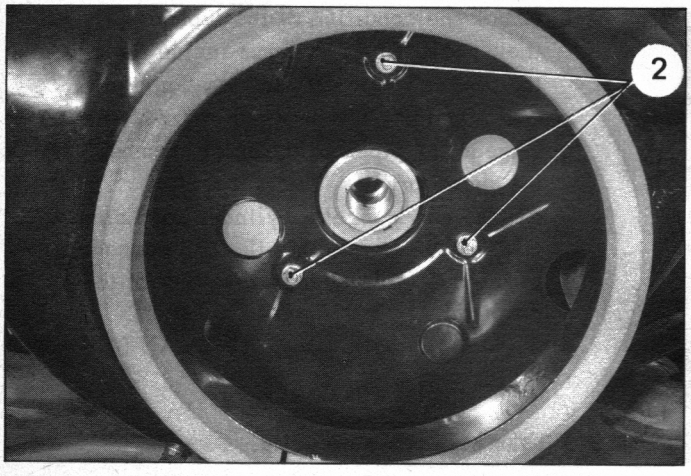

25. Fit the fan :

Fit the belt on the alternator pulley.

Engage the belt on the fan pulley.

Fit the fan on the crankshaft end.
Make sure that the thrust washer is in place.
Fit the starter dog (3) equipped with a lock nut (4) *(face and threads oiled)*.
Position it so that it is horizontal when the engine is at ignition point.
Tighten the nut (4) to 170 to 200 mΛN (17 to 20 m.kg) (torque wrench and extension MR. 630-17/1).
REMARK : The starter dog should have 4 to 5 mm of thread visible after the tightening of the nut.

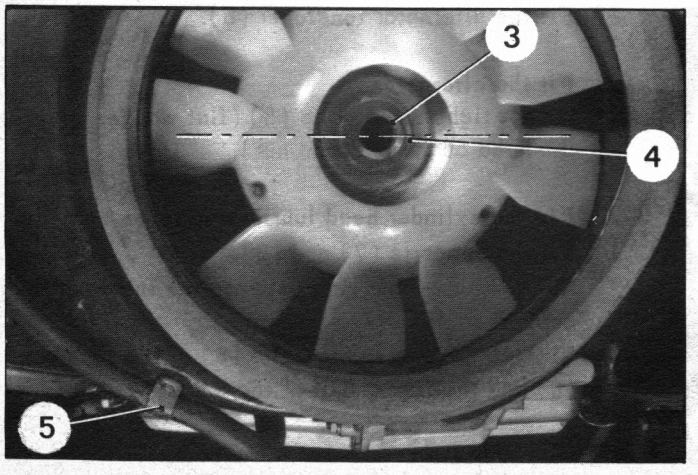

26. Fit the flexible feed pipe of the high pressure pump :

With the aid of clips (5) fit the flexible feed pipe on the fan cowl (contact washer).

27. Fit the covers of the upper ducts :

Left-hand side : place the support of spark plug lead on the central fixing bolt.

9005

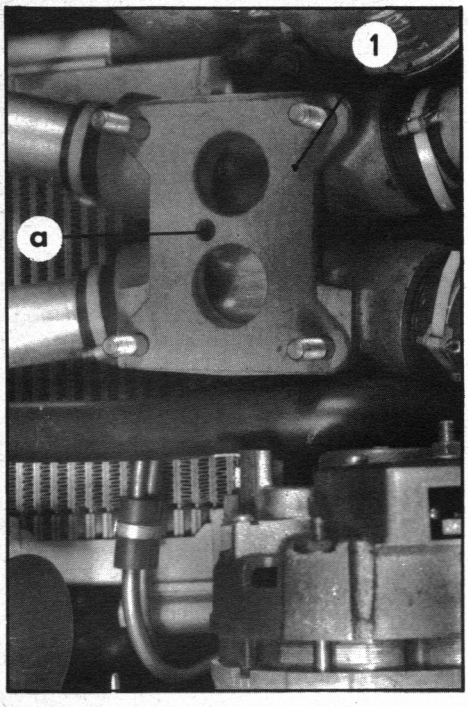

28. Fit the carburettor : *(Vehicles produced up to August 30, 1972)*

Smear the two faces of the spacer (1) with LOWAC sealing compound.
Fit the spacer on the box, the hole « a » positioned on the right side.
Fit the carburettor.
Tighten the nuts.

29. Fit the intake silencer :

Fit a flat washer on each support.
Engage the feet of the silencer on the supports.
Fit the spacers.
On the front support, fit a flat washer and a support for a spark plug lead.
Tighten the nuts (contact washer).
Connect up the pipe (2) to the carburettor.
Tighten the collar.
Connect up the flexible pipe of the breather to the silencer.

7933

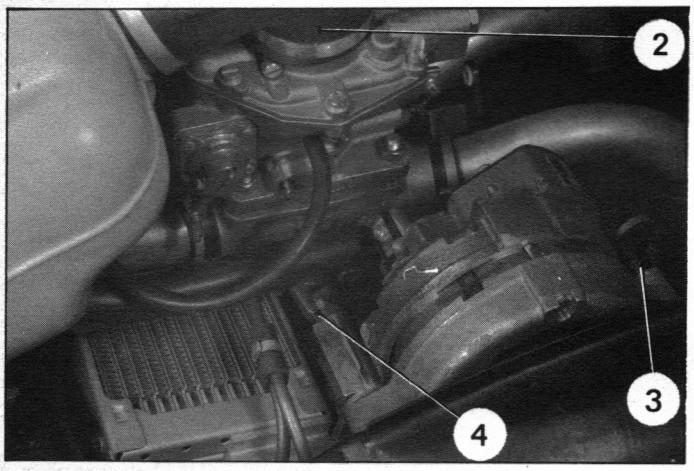

30. Stretch the alternator belt.
Tighten the bolts (3) and (4).

31. Fit the spark plugs.
Connect the spark plug leads.

32. Remove the engine from its support 2508-T.

33. Fit the clutch :

Fit the clutch disc and mechanism.
Centre the disc with the aid of mandrel MR. 630-31/85.
Tighten the bolts (5) to 18.5 mAN (1.8 m.kg) (Shakeproof washer).

8628

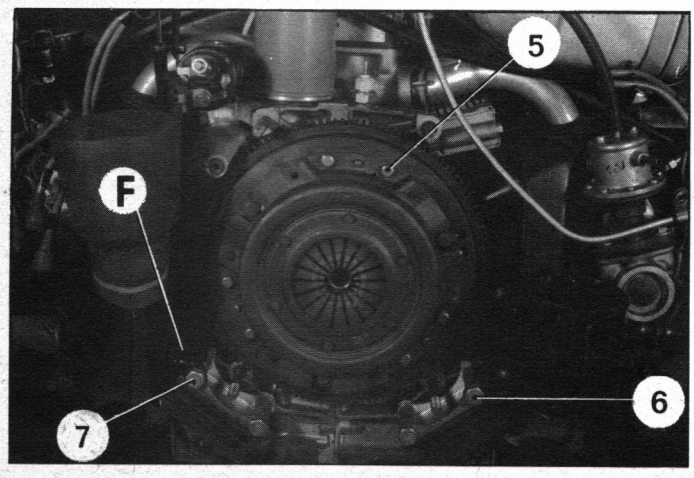

34. Fit the rubber mountings :

Fit the mountings. Fit the fixing bolts by placing :
- a flat washer under the head of bolt (6),
- a flat washer and the mounting plate F under the head of bolt (7).

Tighten the bolts to 50 to 60 mAN (5 to 6 m.kg).

35. Top up the engine oil.

OVERHAULING A CYLINDER HEAD.

8029

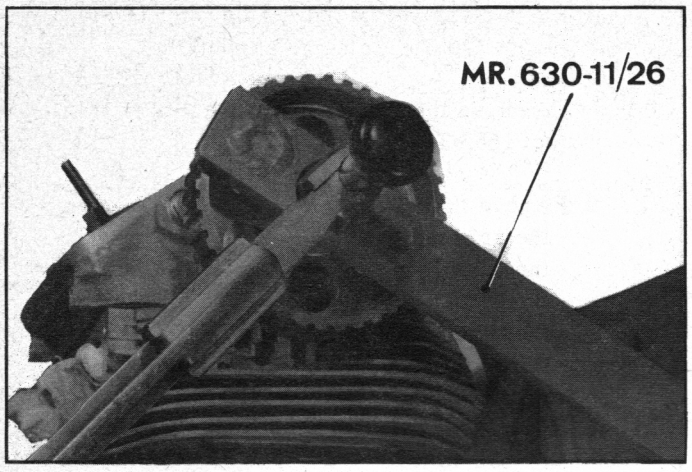

9568

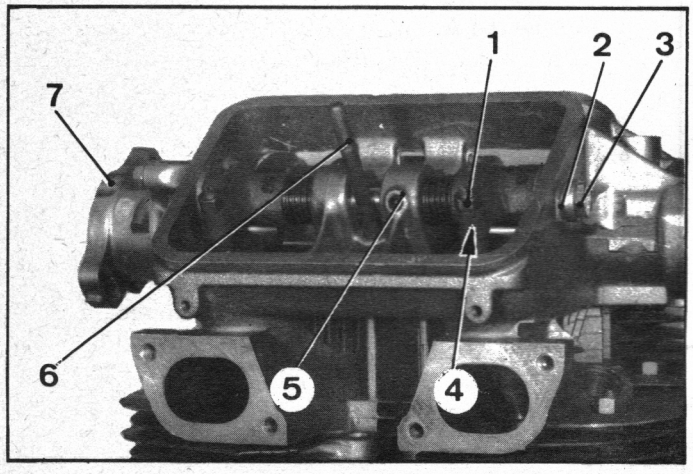

Manual 810-2

DISMANTLING.

1. **Place the cylinder head in a vice :**
   Use support MR. 630-34/31.

2. **Remove the camshaft wheel :**
   Use tool MR. 630-11/26 to hold the wheel.

3. **Remove the rocker shafts :**
   a) Slacken the adjustment screw (1) on the rockers under stress.
   b) From each of the shaft extremities, remove :
   - the blanking bolt (3) and its copper seal (8),
   - the spacer (2) or (10),
   - the O-ring seal (9).
   c) Remove :
   - the studs (6),
   - the set screw (5) (3 mm Allen key).
   d) Extract the shafts with the aid of tool MR. 630-25/8.
   Take out :
   - the rocker arms (12),
   - the springs (11).
   NOTE : *On vehicles produced up to 15 February, 1971 :*
   Do not lose the cups (4) placed between the rocker arms, adjuster screws and the valve stems.

10564

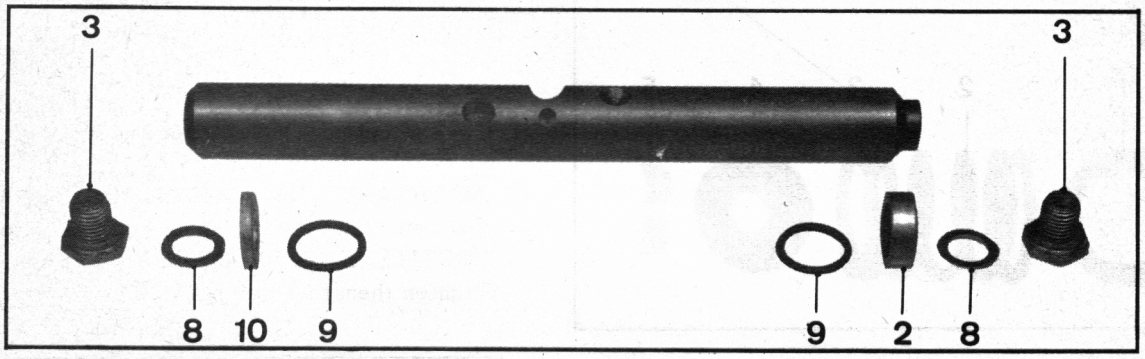

9569

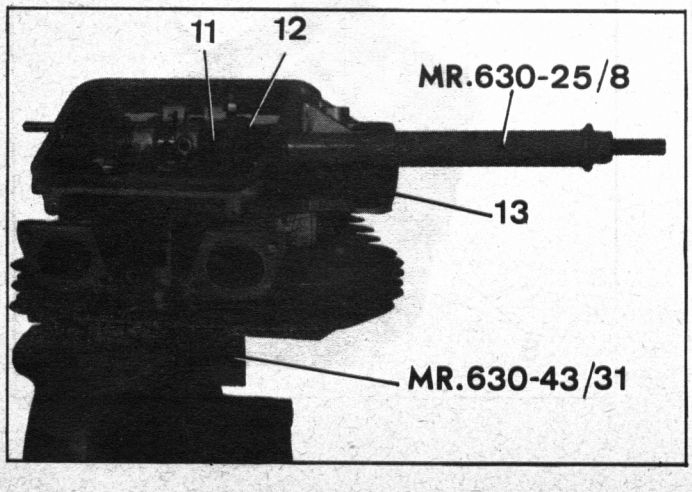

4. **Remove the camshaft :**

   a) Remove the fixing nuts of the rear bearing (7).

   b) Loosen the bearing (7) by tapping lightly with a mallet on the extremity of the camshaft and remove the assembly.
   NOTE : The camshaft and the rear bearing form an assembly which cannot be dismantled.

   c) Remove the front seal (13).

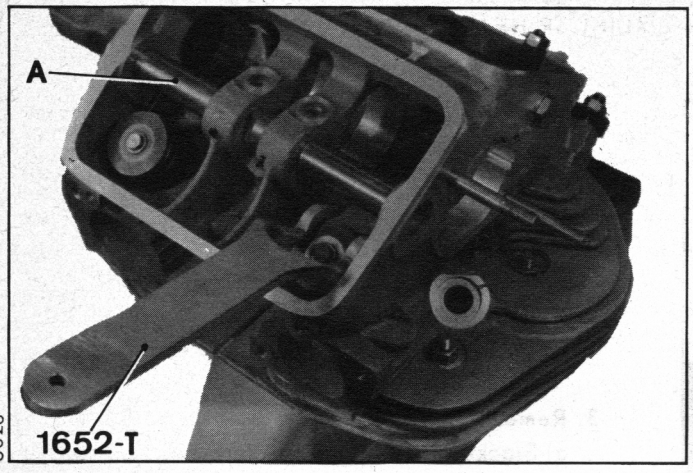

8028

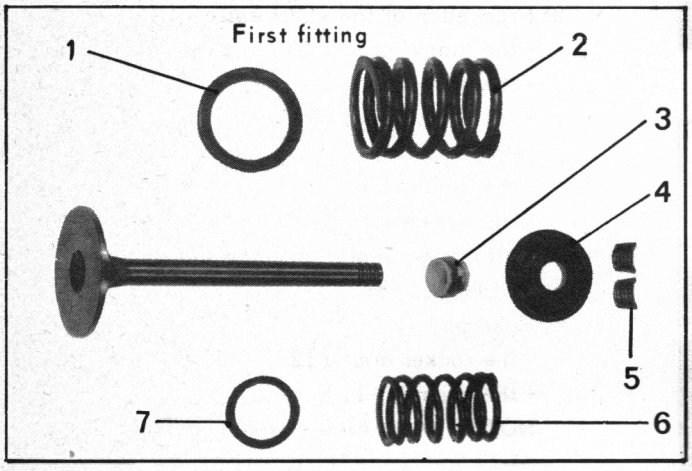

10997

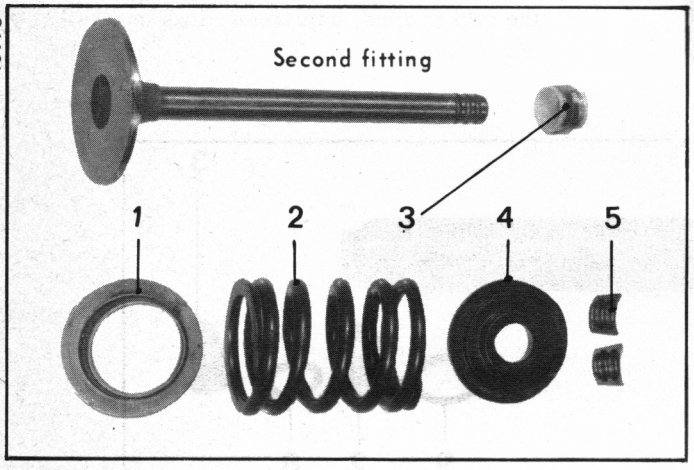

10998

Guide	Diameter (mm)
Intake	8 $^{+ 0.030}_{+ 0.005}$
Exhaust	8.5 $^{+ 0.015}_{- 0.010}$

5. Remove the valves :

a) Fit successively a rod A (diameter 16 mm, length 270 mm) in place of each rocker arm shaft.
Compress the valve springs with the aid of tool 1652-T.

b) Remove :
- the split cotters (5),
- the cups (4),
- the springs (6) and (2),
- the thrust washers (1) and (7),
- the seals (3).

c) Remove the cylinder head from support MR. 630-43/31.
Remove :
- the valves,
- the rod A.

6. Clean the parts.

IMPORTANT : To assure tightness of the front bearing, each camshaft includes a micro-turbine machined on the bearing surface of the seal. Never destroy this micro-turbine. This could cause an oil leak.

PREPARATION.

7. Case of cylinder head replacement :

IMPORTANT : The two fixing studs (8) of the rear bearing of the camshaft must be fitted with LOCTITE N° GX. 01 459 01 A.
Tighten them to 3 to 5 mAN (0.3 to 0.5 m.kg).

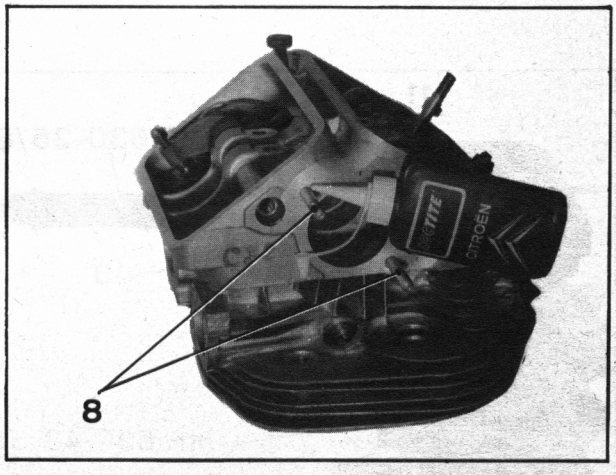

8817

G. 11-1

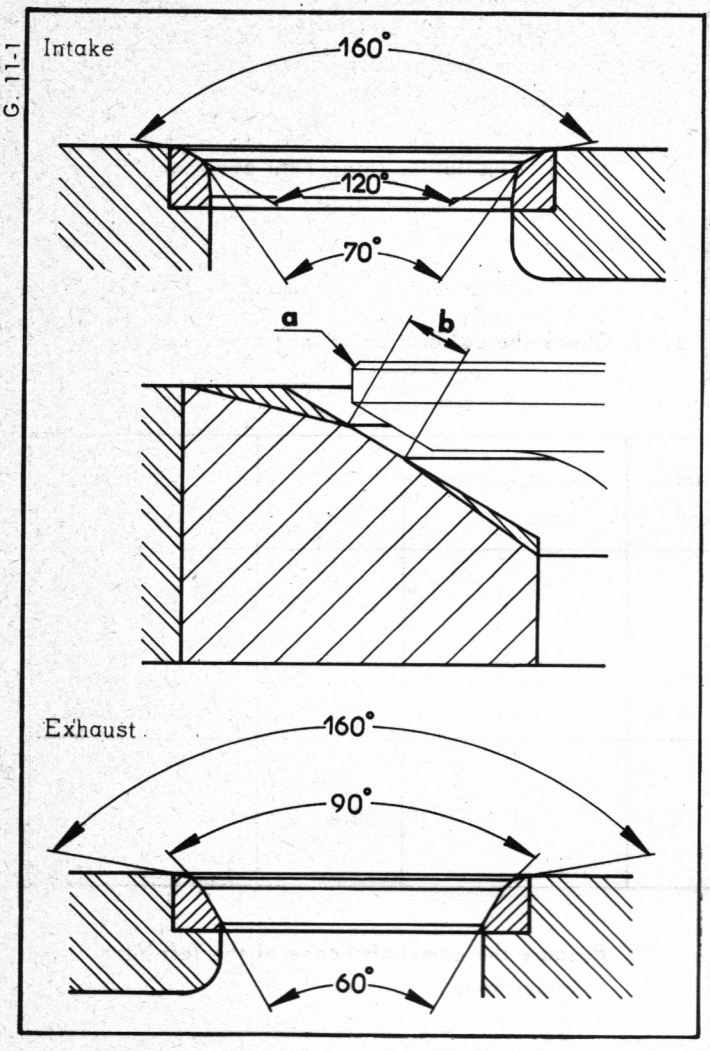

Manual 810-2

8. Grind the valves :

Use a valve grinder :

a) Chamfer of valve heads :
Intake = 120°
Exhaust = 90°

b) Make a slight chamfer in « a » on the valve heads to smooth the edge.

9. Grind the valve seats :

Use the following emery wheels :

a) Intake valve seats :
- for the seat : 120° wheel,
- for the upper lead-in : 160° wheel,
- for the lower lead-in : 70° wheel.

b) Exhaust valve seats :
- for the seat : 120° wheel,
- for the upper lead-in : 160° wheel,
- for the lower lead-in : 160° wheel.

DESIGNATION	VALVES	
	Intake	Exhaust
Angles (degrees)	120	90
Head dia (mm)	39	34
Stem dia (below head) (mm)	8 $^{-0.005}_{-0.020}$	8.5 $^{-0.021}_{-0.036}$
Length (mm)	97.5	93.3

10. Grind the valves :

Use tool 1615-T.

Conditions :
- On the valve : the large diameter of the sealing surface must be equal to the large diameter of the head.

- On the seat : width « b » of the valve collar must be a maximum of :

Intake = 1.3 *mm*
Exhaust = 1.8 *mm*

7080

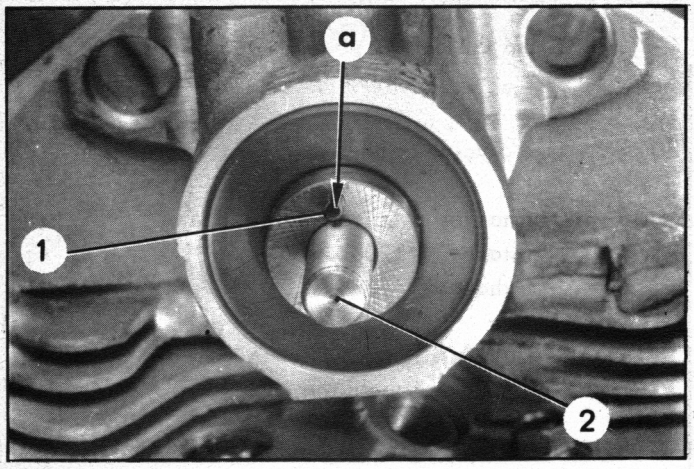

11. Carefully clean the cylinder head to eliminate any trace of emery in the gas passages.
Blow them and the lubrication piping out with compressed air.
If these are plugged up, soak the cylinder head in a bath of cellulose thinner for about an hour.
Repeat blowing operation.

12. Check the calibration of the valve springs.

Springs	Length under load (mm)	Load (kg)	Length under load (mm)	Load (kg)	Sense of winding
ENGINES G. 10 **2 springs**					
Outer	32	23.5 ± 2	24.5	50 ± 3	Left-hand
Inner	26.8	9.9 ± 0.9	19.3	21.1 ± 1	Right-hand
ENGINES G. 10 - G 103 **1 spring**	32	25.4 ± 2.5	24	59.6 ± 2	Left-hand

9582

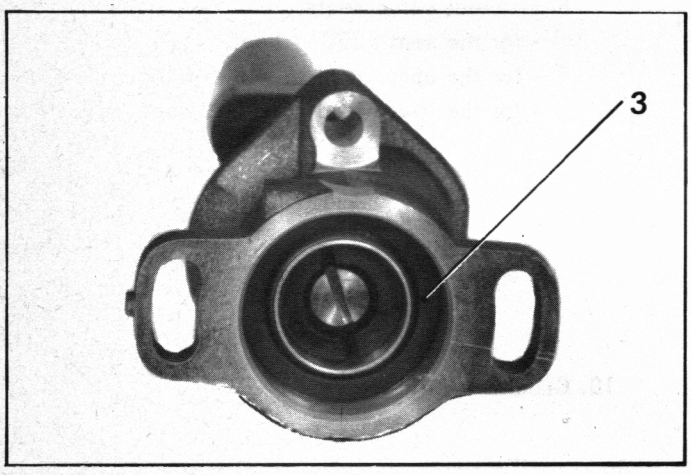

13. Prepare the camshaft (case of the left-hand cylinder head) :

a) *Rear bearing :* remove seal (3). Fit the new seal with the aid of tool 1695-T.

b) *Front end :* If necessary, replace the Mecanindus split pin (1) (Drive pulley). Fit it in positioning the slot « a » towards the outside of the camshaft.

14. Case of replacing camshaft stud (2) :

IMPORTANT : The fixing stud of the wheel must be fitted with LOCTITE GX. 01 459 01 A. Tighten it to 25 to 30 mAN (2.5 to 3 m.kg).

Vehicles produced since May 10 1971 : the camshaft and fixing stud (2) have been modified. It is not possible to fit a new stud (4) in an old model camshaft.

9601

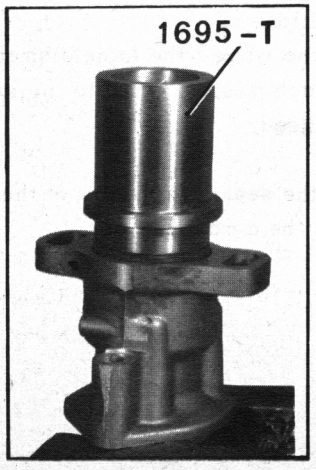

10 563

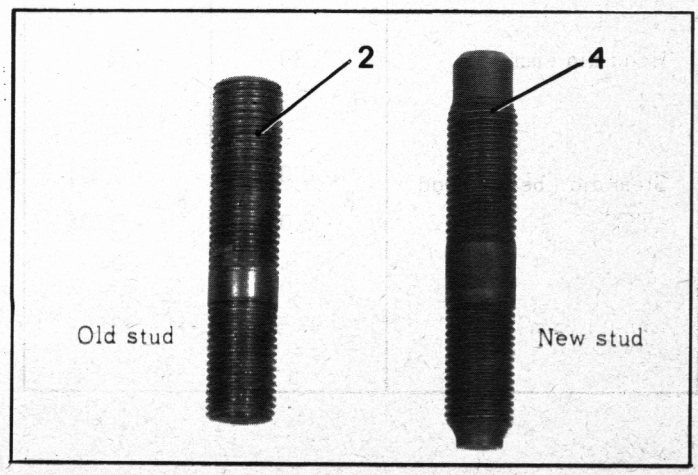

FORMER FITTING NEW FITTING

10997

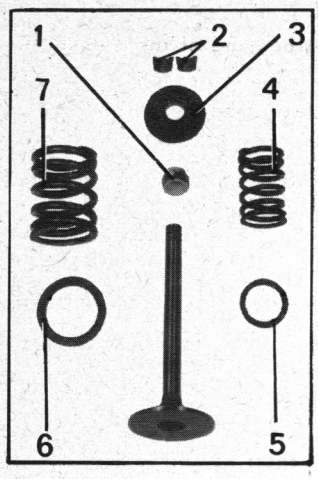

10998

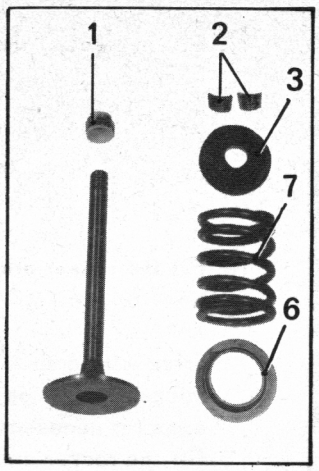

8028

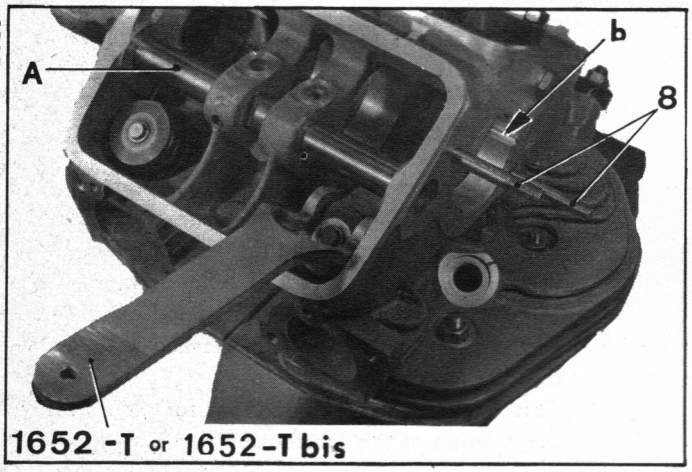

Manual 810-2

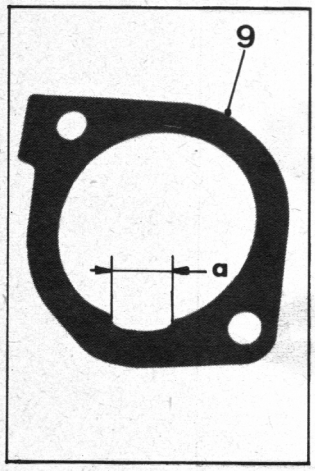

9581

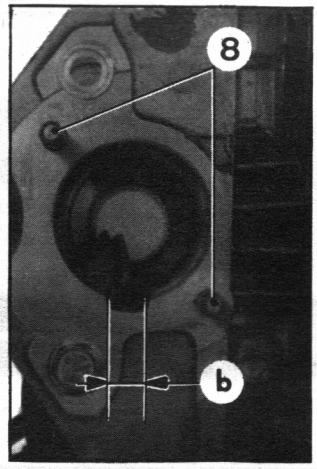

9580

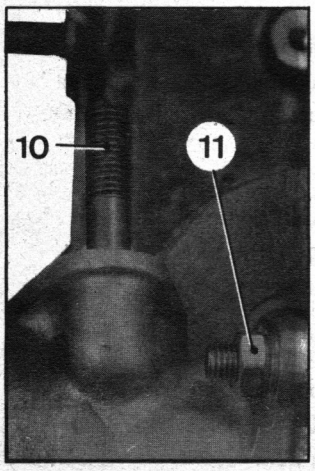

7979

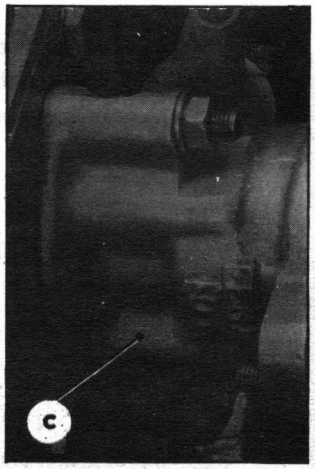

7958

FITTING.

IMPORTANT : *It is not possible to fit the single valve spring on cylinder heads equipped fo two springs per valve.*

15. Fit the valves :

a) Oil the valve stems and guides.
Fit the valves.
b) Fix the cylinder head in the vice (support MR. 630-43/ 31).
c) Fit the seals (1).
(Change the seal at each dismantling).
CAUTION : Inner diameters of the seals (1) :
- exhaust = 8.5 mm
- intake = 8 mm
Slip the seal on to the valve stem until it is in stop position on the guide (use a tube with an inner diameter of 8.5 mm to complete fitting).
d) Successively fit the rod A (see paragraph 5a) in place of each rocker arm shaft.
Fit , as the case may be, on each of the valves :
- the thrust washers (5) and (6),
- the springs (4) and (7),
- the cup (3).
Compress the springs with the aid of tool 1652-T or 1652-T bis.
Fit the split cotters (2).
Remove the rod A.

16. Fit the camshaft :

a) Fit the paper seal between the rear bearing of the camshaft and the cylinder head.
Engage each seal (9) on the fixing studs (8) *by lining up notch « a » of the seal with groove « b » of the oil return of the cylinder head. Fit the seal « dry ».*
Oil the bearing surface of the front seal on the camshaft.
b) Engage the camshaft in the cylinder head.
IMPORTANT : *Position the rear bearing : boss « c » (oil return) must correspond with groove « b » of the oil return of the cylinder head.*
That is to say, it must be pointed towards the exhaust orifices.
(In the case of the right-hand cylinder head, this corresponds to positioning the fixing studs (10) towards the intake orifices).
c) Tighten the fixing nuts (11) (contact washer) to 15 to 18 mΛN (1.5 to 1.8 m.kg).

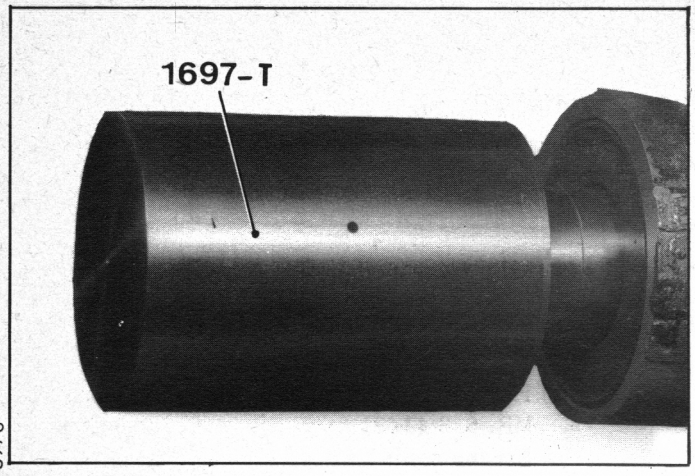

8978

17. Fit the seal of the front bearing of the camshaft :
Use tool 1697-T.
NOTE : The seal must be fitted when the camshaft is in place. Otherwise, the will be damaged by the passage of the shaft.

18. Fit the rocker arms :
Case of vehicles produced up to February 15, 1971 :
Stick with grease the cups (3) on the ball and sockets of the adjusting screws of the rocker arms (if necessary).
Fit the rocker arms and their spring in the cylinder head.
NOTE : All the rocker arms and springs are identical. The springs should be resting on the central bearing « a ».

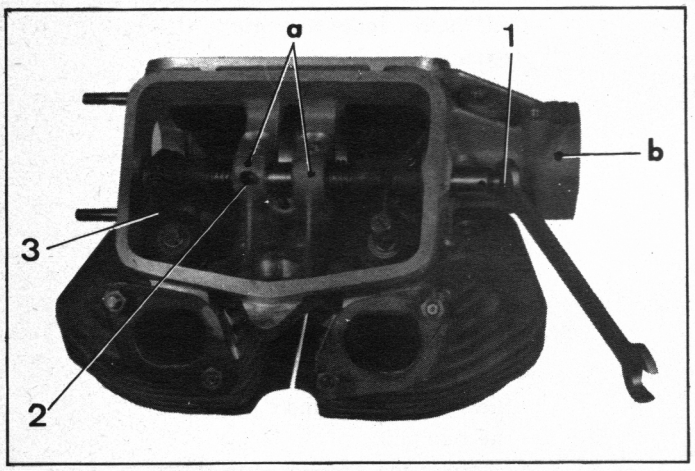

8016

19. Fit the rocker arm shafts :
IMPORTANT : *Marking of the shafts :*
- The left-hand intake and right-hand exhaust shafts are identical and have no markings.
- The right-hand intake and left-hand exhaust shafts are identical and are marked with a blind hole « d ».
This marking is very important for the correct positioning of the lubrication holes.

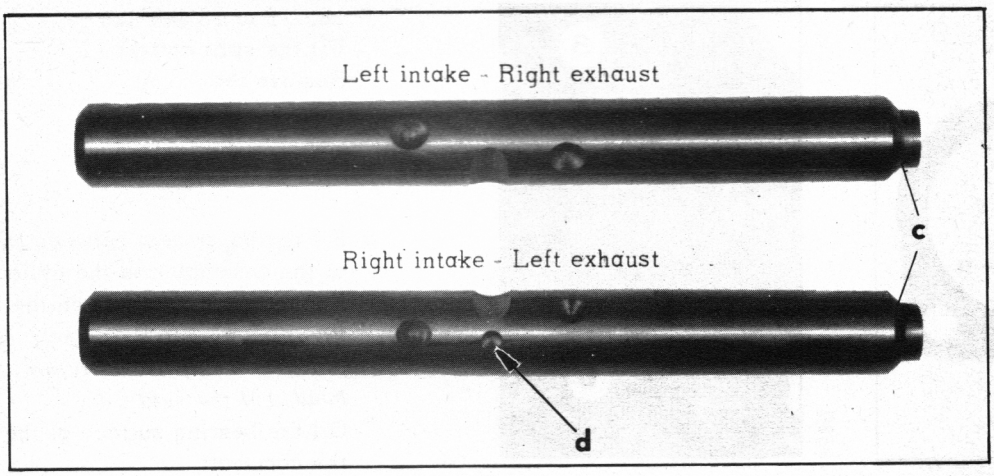

9023

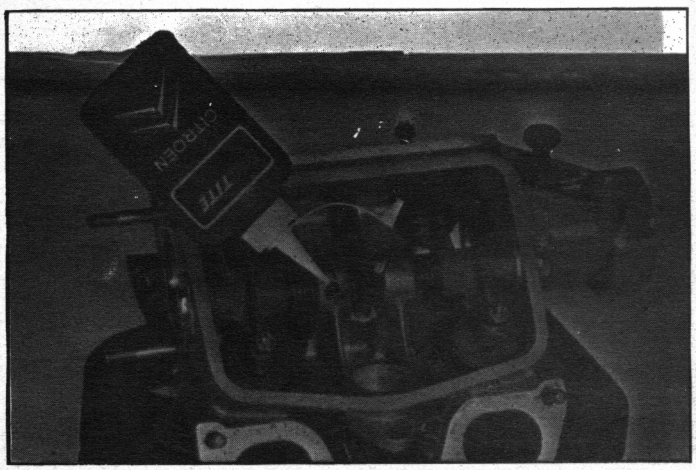

8818

a) Oil the shafts and engage them in the cylinder head, the shouldered position « c » pointed towards the front bearing « b » of the camshaft.

b) Temporarily fit a blanking screw (1) to allow the positioning of the shaft and to make the blind hole correspond with the set screw (1).
IMPORTANT : The set screw (1) must be fitted with the threads smeared with LOCTITE N° GX. 01 459 01 A.
Remove the blanking screw (1).

10564

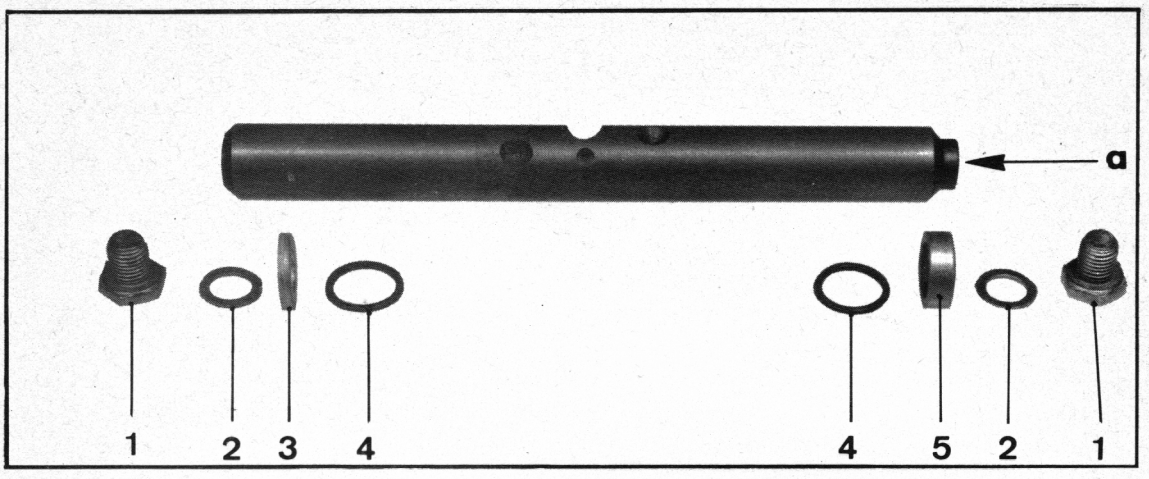

8029

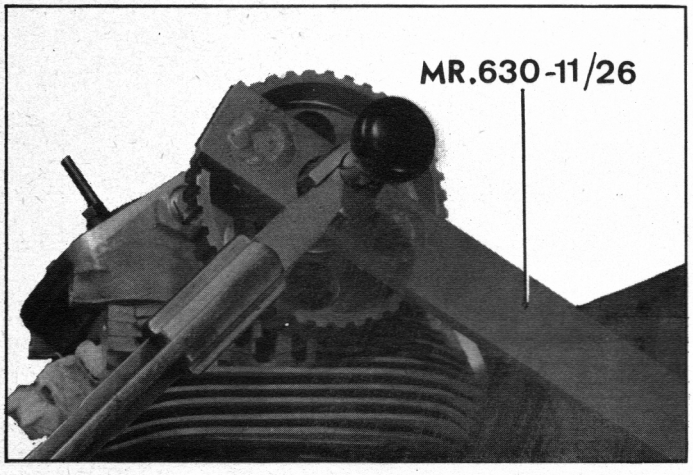

c) On each end of the shafts, fit :
- an O-ring seal (4),
- a spacer (3) or (5) *(the thickest spacer (5) on the shouldered end « a »),*
- a blanking screw (1) and its copper joint (2).

Tighten the bolts (1) to 17 to 18 mΛN (1.7 to 1.8 m.kg).

d) Tighten the fixing studs (6) of the cylinder head covers, the shortest threaded portion on the cylinder head side.

9568

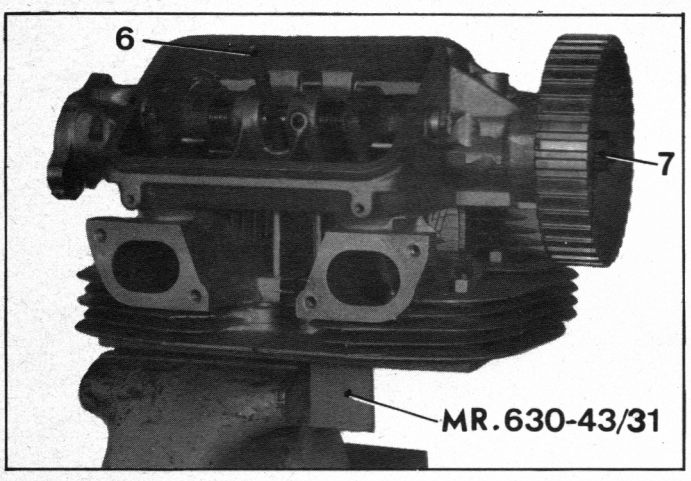

20. Fit the camshaft wheel :

Fit the wheel (positioning pin on the camshaft).

Immobilize the wheel with the aid of tool MR. 630- 11/26 and turn the nut (7) (flat washer) to 82 mΛN (8.2 m.kg) (torque wrench).

21. Remove the cylinder head from support MR. 630-43/31.

Vehicles equipped with a G.10 Engine (1015 cc) (produced up to February 1973)

G.33-1 b

HORIZONTAL SECTION

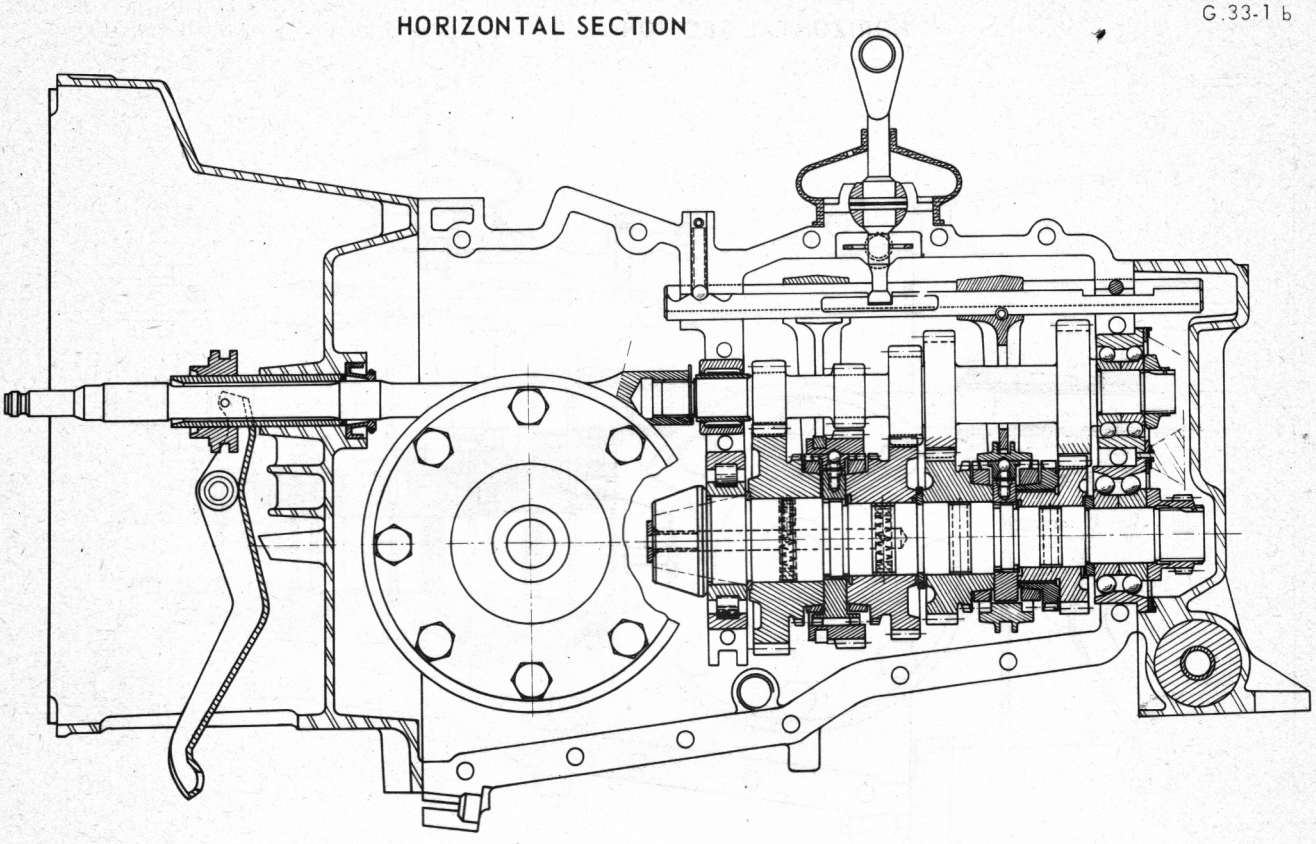

G.33-2 b

TRANSVERSE SECTION

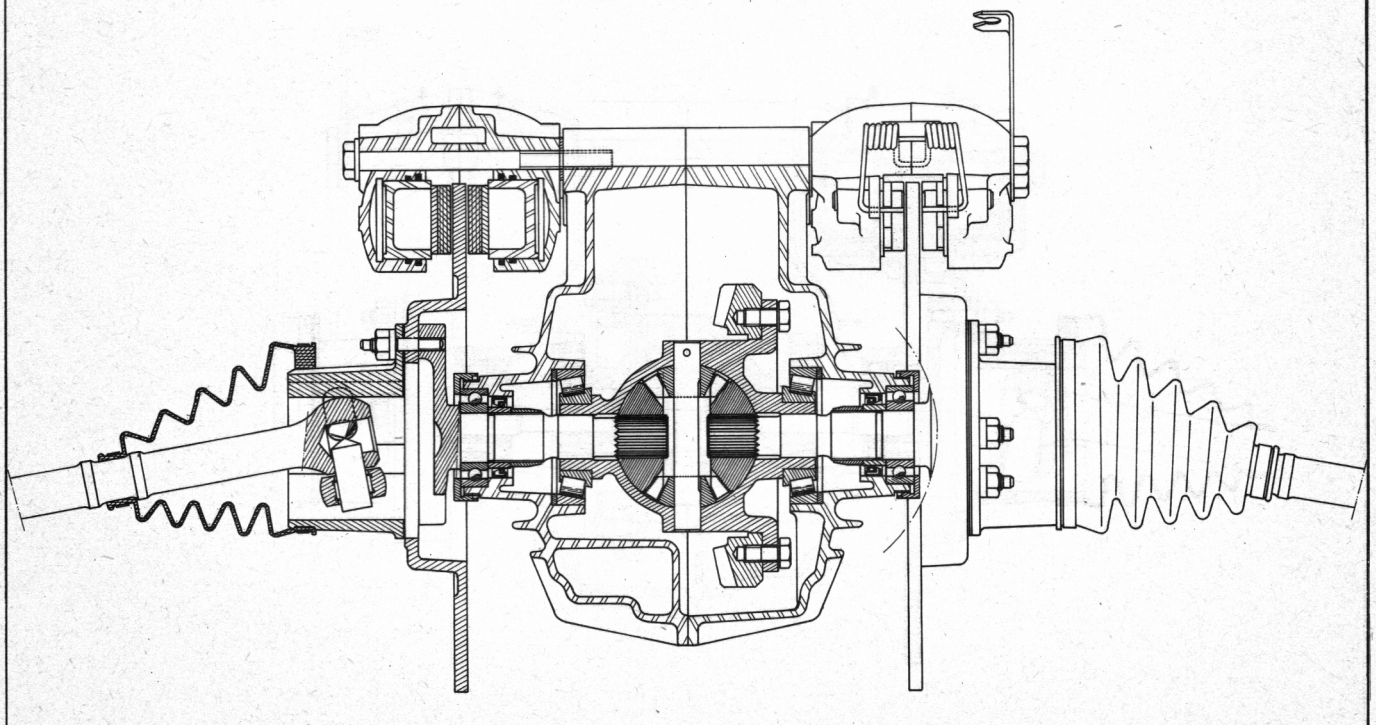

Vehicles equipped with a G.103 Engine (1220 cc)
Vehicles equipped with a G.10 Engine (1015 cc) (produced since February 1973)

G.33-15.b

HORIZONTAL SECTION

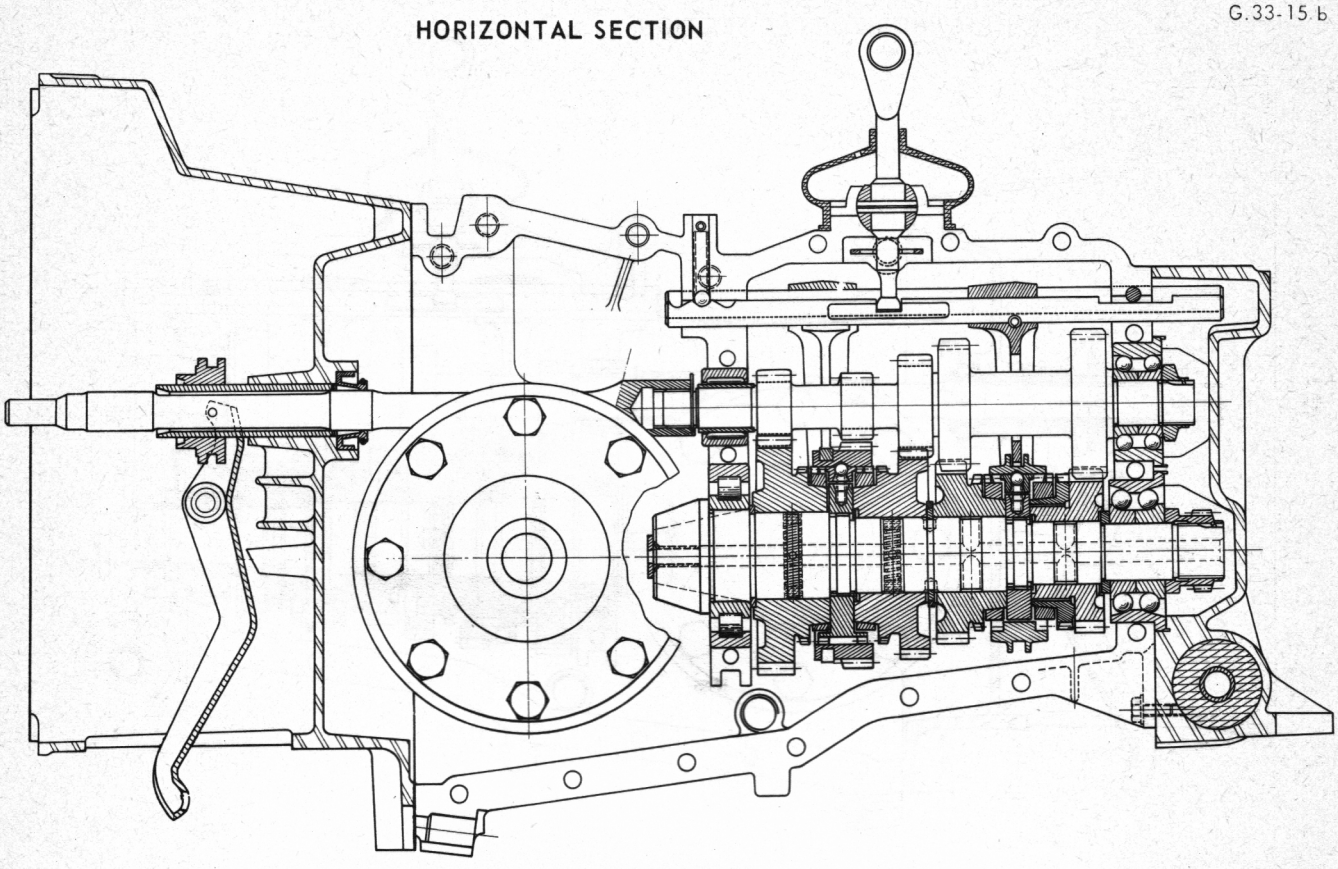

A.33-10

TRANSVERSE SECTION

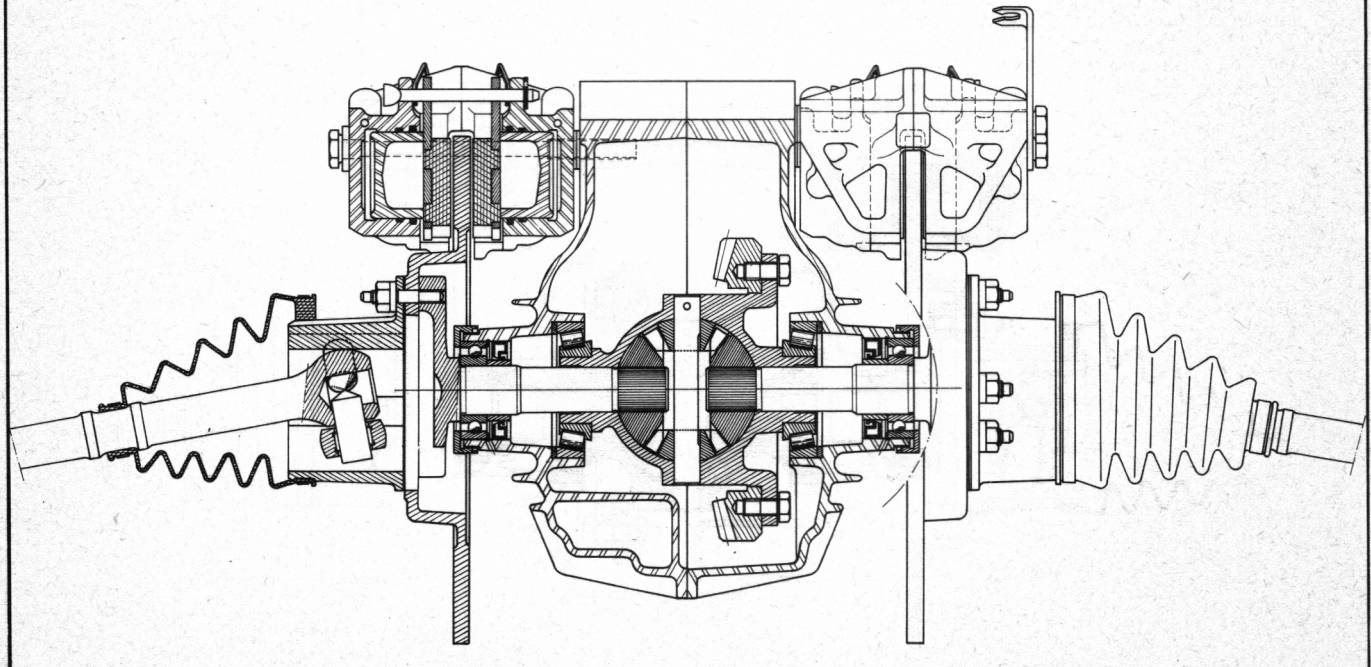

GEAR SEQUENCE

G. 33-4 c

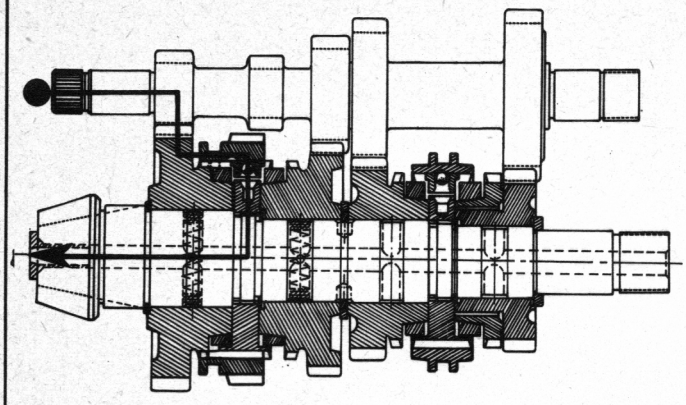

1st GEAR

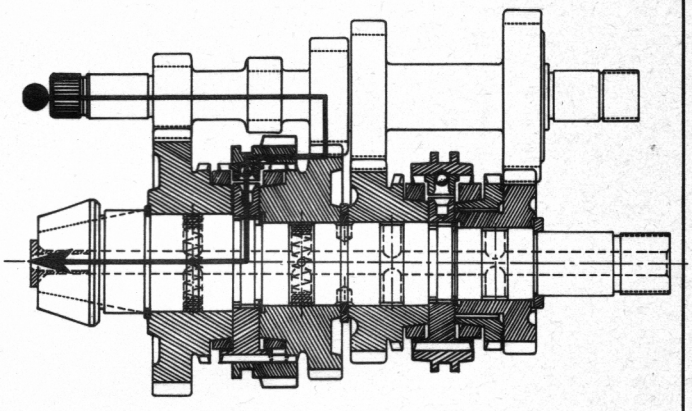

2nd GEAR

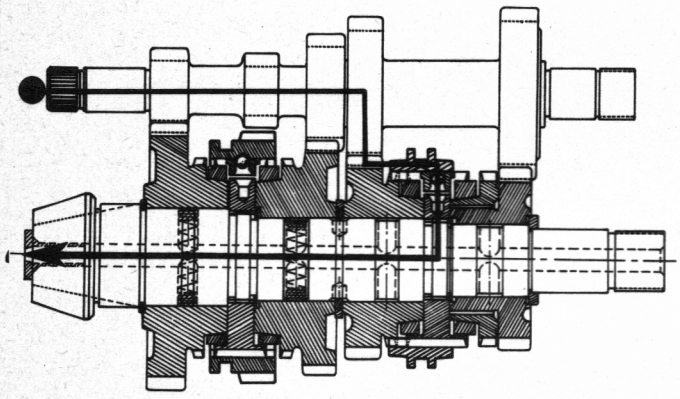

3rd GEAR

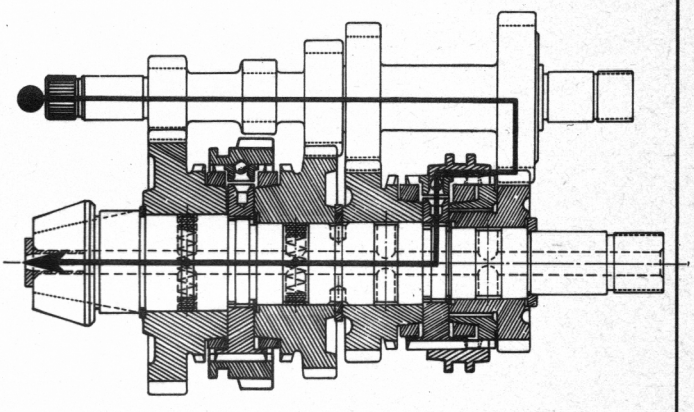

4th GEAR

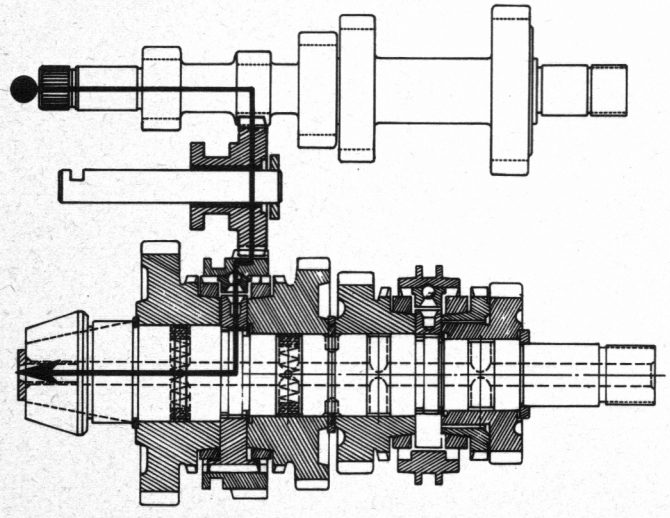

REVERSE GEAR

NOTE : The gears of the drive shaft are in constant mesh with the driven gears of the 1st, 2nd, 3rd and 4th gears.

OVERHAULING A FOUR-SPEED GEARBOX (MECHANICAL CLUTCH)

9168

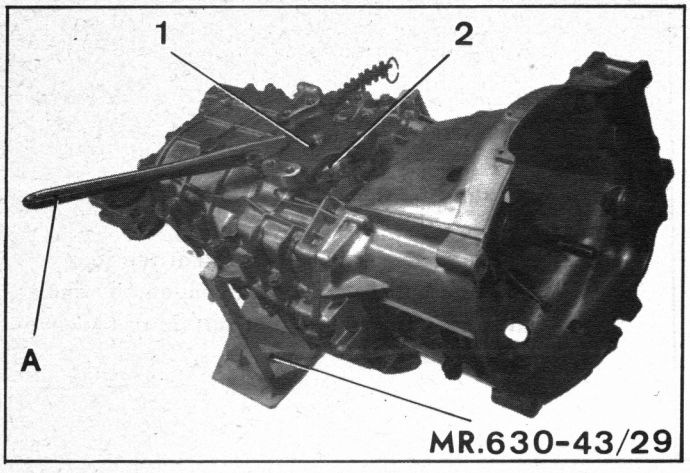

7229

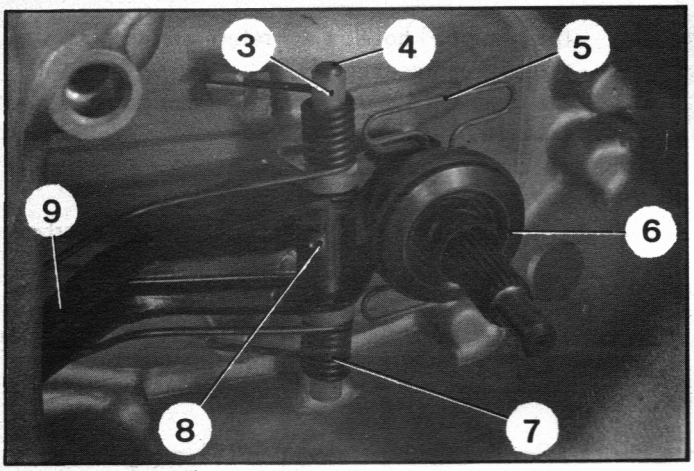

Manual 810-2

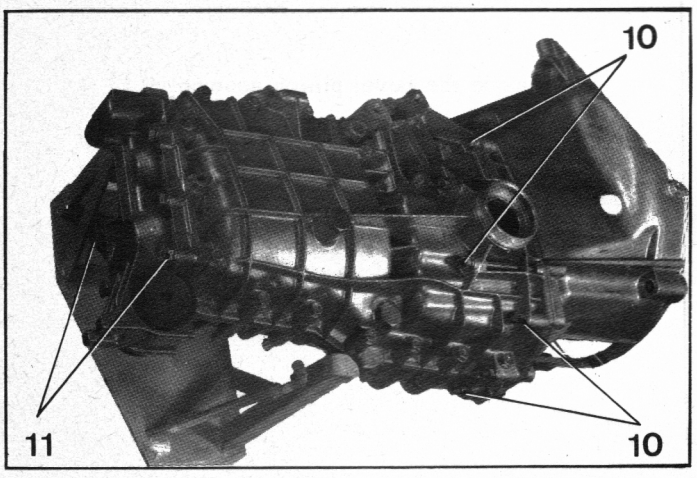

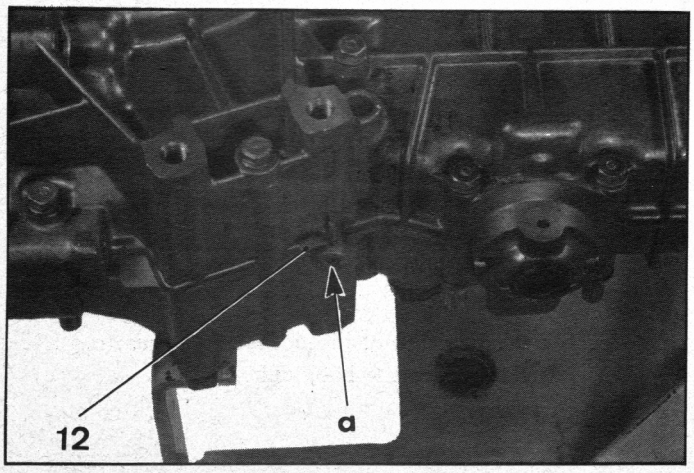

I. DISMANTLING

1. Drain off the oil.
   Place the gearbox on stand MR. 630-43/29 as shown in the photograph; the left-hand half engine-casing resting on the stand.

2. **Remove the differential shafts from the gearbox :**

   On each side :

   Loosen the ring-nut (2) with the aid of chain wrench A.
   Release the differential shaft (1) from the gearbox equipped with the ring-nut (2) and the bearing (if necessary tap lightly with a mallet)

3. **Remove the clutch thrust bearing and the control fork :**

   - Remove the spring clip (5).
   - Remove the thrust bearing (6).
   - Remove the stopscrew (8) of the fork pin.
   - Remove the pin (4) by passing it through one of the vents of the clutch housing.
   - Remove the spring (7), the anti-rattle bushes (3) and the fork (9).

4. **Remove the rear gearbox cover :**

   Remove the fixing bolts (11) and release the cover.

5. **Remove the clutch casing :**

   Remove the fixing nuts (10) and release the housing.

6. Blank off the orifice « a » with a finger.

   Remove the split pin (12).

   Release the blanking pellet from orifice « a ».

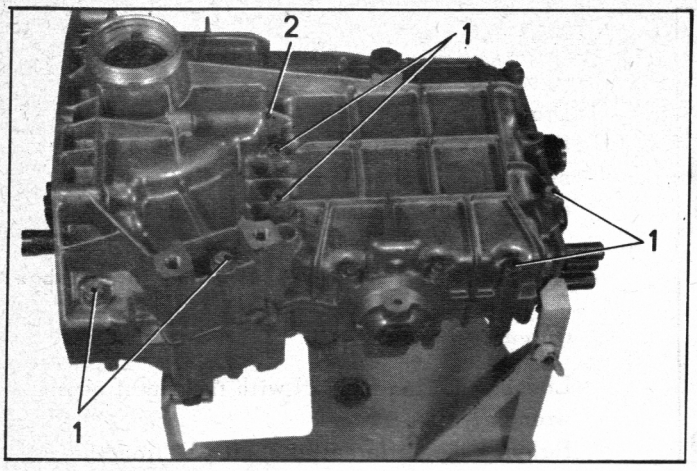

9177

7. Remove the right-hand half casing of the gearbox :

Remove the fitting bolts and nuts (1) and (2).

As the case may be, the bolt (2) is located on the right-hand or left-hand casing in « a ».

Remove the right-hand half casing.

CAUTION : Care must be taken that the lock ball (8), the ball (and socket) guide (6) and the guide thrust spring do not fall down (recover these three parts).

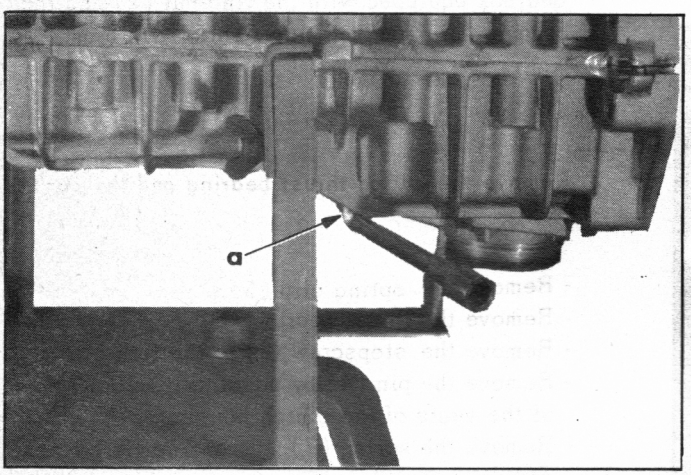

7235

Remove :

- the plate (5) holding the return spring,
- the ball and socket (7),
- the plunger (4), the spring (9) and the lock ball (10).

10. Remove the gear cluster assembly of the gearbox

a) Remove :
- the shaft and fork (3) of the 3rd and 4th gear,
- the lock ball (14).

b) Remove the control shaft (15) and primary shaft (13) assembly,

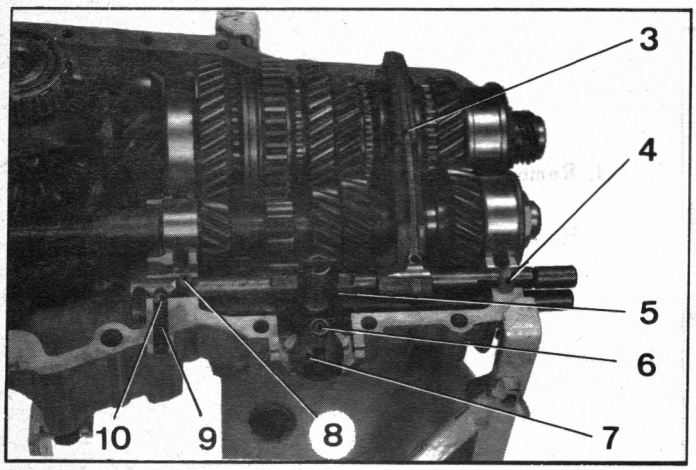

9186

c) Remove the bevel pinion assembly (12).

d) Remove the differential (11).

Remove the roller bearing outer races from the half casings. *Mark them with the corresponding bearings.*

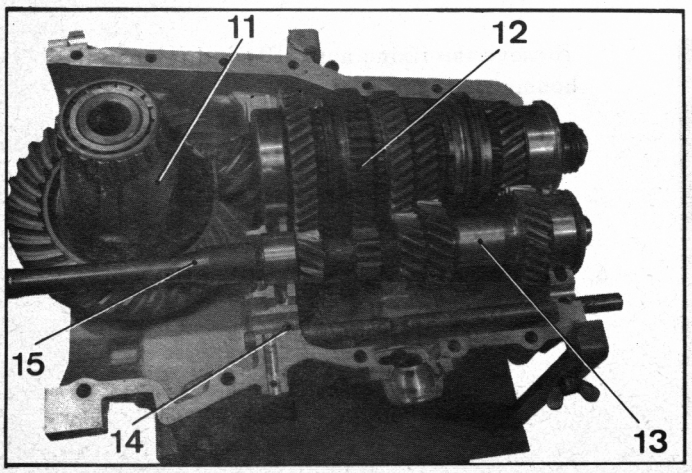

7573

IMPORTANT NOTE : If the gearbox overhaul does not entail changing :

- the gearbox casing,
- the crown wheel and pinion,
- the differential bearings,
- the differential casing.

mark the position of the adjusting shims to avoid having to re-set the backlash.

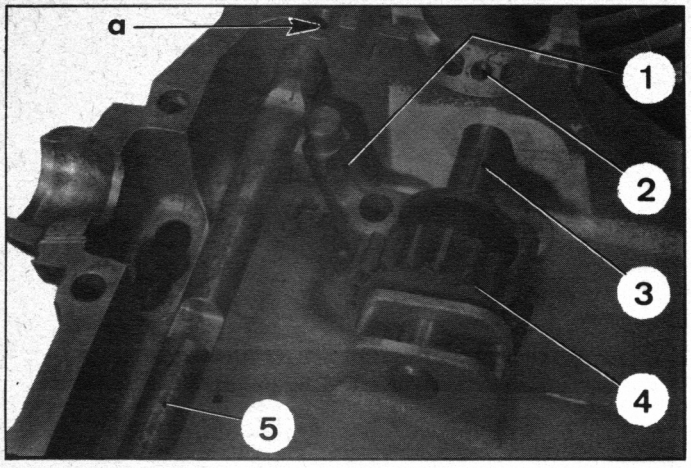

9167

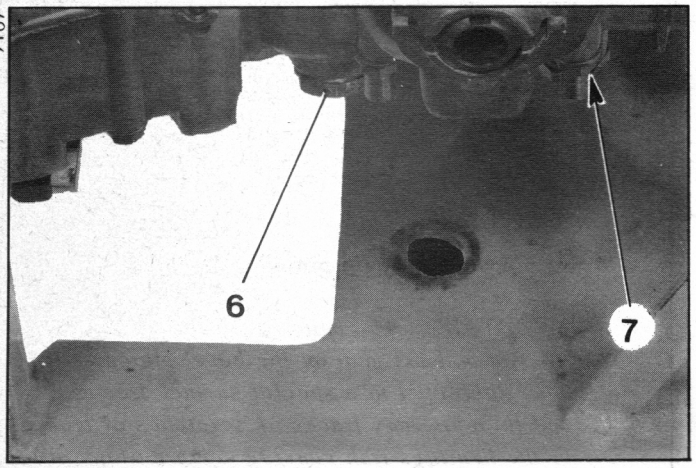

Manual 810-2

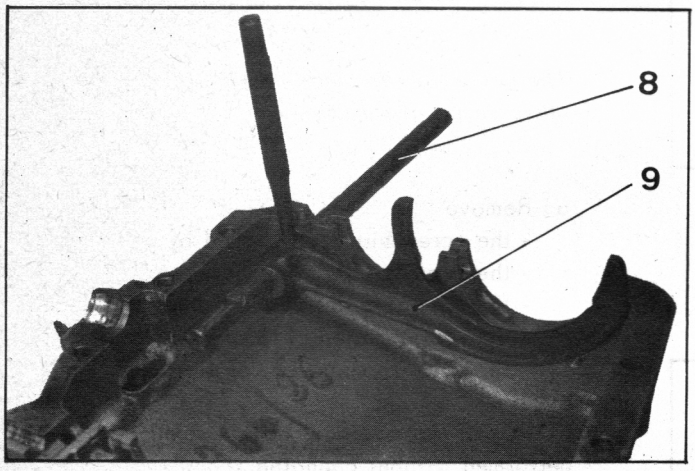

7869

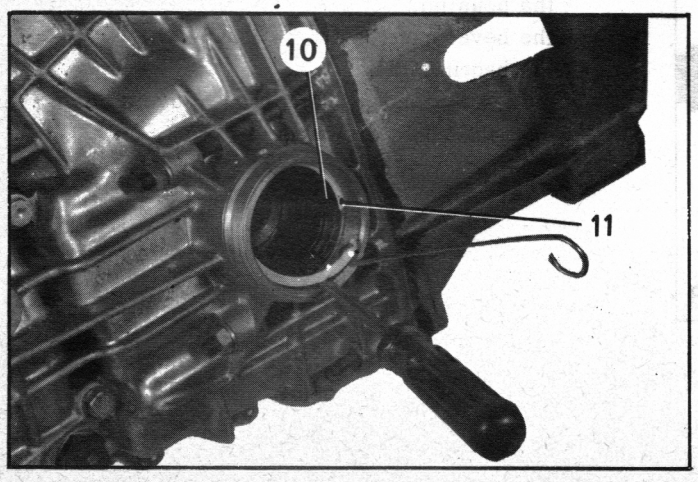

11266

II. STRIPPING DOWN THE ASSEMBLIES

1. Strip down the left-hand half-housing :

a) Remove the reverse gear intermediate wheel (4).
To do this :
- remove the cylindrical pin (2) (which is free in its housing),
- release the spindle (3) and remove the intermediate wheel (4).

b) Remove the reverse gear lever (1). To do this :
- remove the lever spindle (6) (unscrew it through the underside of the half housing),
- remove the lever (1).

c) Remove the blanking plug (7) (unscrew it through the underside of the housing).
NOTE : On « *Club* » vehicles the reversing light switch takes the place of plug (7).

d) Remove the reverse gear control shaft (5).
To do this :
- free the shaft (5) towards the rear by placing a finger on orifice « a » of the housing of the lock ball to avoid the projection of the latter,
- remove the lock ball and its spring in « a ».

e) Remove the circlip (11) *(if fitted)*

f) Remove the seal (10) of the drive outlet shaft (Drive it out using a tube).

2. Strip down the right-hand half housing :

a) Remove the 1st and 2nd gear fork (9).
To do this :
- free the shaft (8) and fork (9) assembly towards the rear, by placing a finger on the lock ball orifice to prevent the projection of the lock ball,
- remove the lock ball and its spring,
- remove the Mecanindus stop pin of the fork (9) (pin punch with a 5 mm diameter).

NOTE : When removing the pin, place the shaft-fork assembly against the rear shaft bearing to avoid damaging it.

b) Remove the drain plug and the oil level plug.

c) Remove the circlip (11) *(if fitted)*

d) Remove the outlet shaft sealing ring (10) (drive it out using a tube).

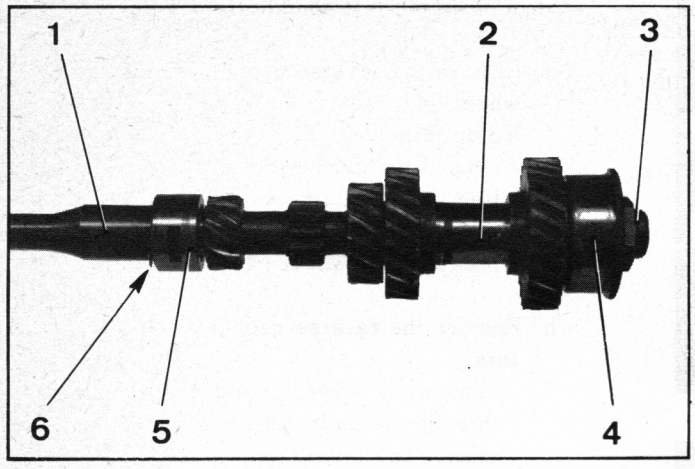

9057

3. Strip down the control shaft/primary shaft assembly :

Remove the circlip (6) and uncouple the control shaft (1) from the primary shaft (2).

Remove :

- the needle bearing (5),
- the nut (3) (locked by peening)
- the bearing (4).

NOTE : The inner race (7) is not interchangeable.

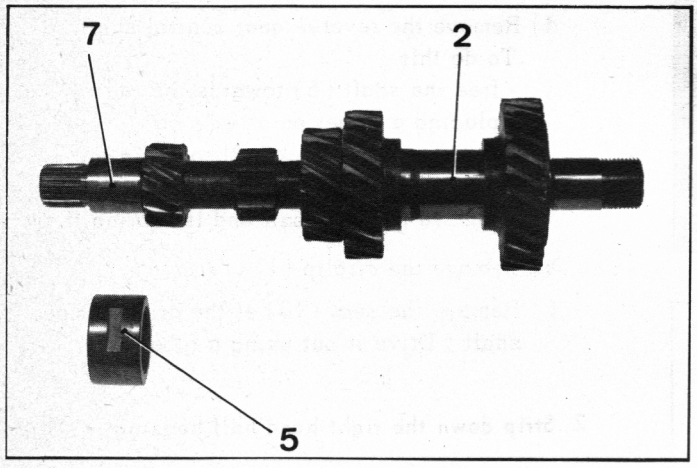

9088

4. Strip down the bevel pinion :

IMPORTANT : *The bearings of the wheels of 4th, 3rd and 1st gear on the bevel pinion have been subjected to a special surface treatment, and therefore any traces of scratches or blows on the bearings risk causing seizure of operating parts.*

The necessary precautions should, therefore, be taken during the disassembly of the parts.

a) Remove :

- the screw-nut (8) (locked by peening),
- the bearing (9),
- the adjusting shim (10) (conic distance),
- the idling pinion (11) of 4th gear,
- the synchro ring (12) of 4th gear.

NOTE : If the overhaul of the gearbox is to be performed without changing :
- the housing,
- the bevel gear,
- the bearing (9),

retain the adjusting shim (10) to avoid having to re-set the conic distance.

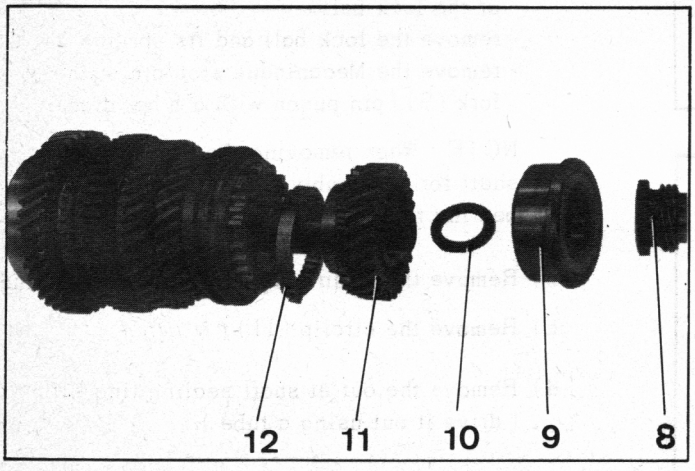

7292

7870

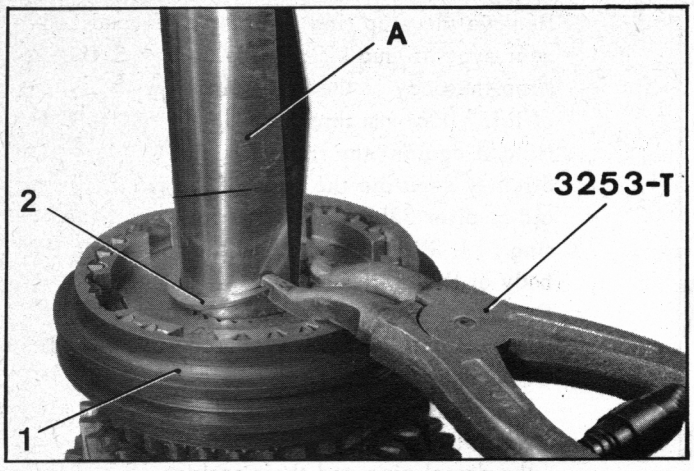

b) Remove the stop ring (2) from the synchronizing hub (1) of 3rd and 4th gear. To do so :
- wrap the end of the bevel pinion with a sheet of foil A (0.10 mm thickness). Hold it against the ring (2). Slightly separate the ends of the ring with the aid of plier 3253-T. Slip the foil under the ring (2).
Remove the ring, sliding on the foil.

7293

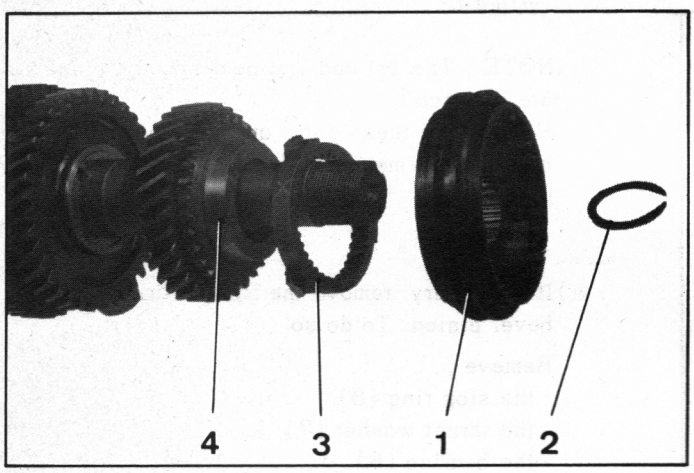

- Remove :
  - the synchronizing hub-sliding gear assembly (1) of 3rd and 4th gear,
  - the 3rd gear synchro ring,
  - the 3rd gear idling pinion (4).

NOTE : The 3rd and 4th gear synchro rings are identical.

However, if these parts are not renewed, they must be left matched with the corresponding pinions.

Manual 810-2

7305

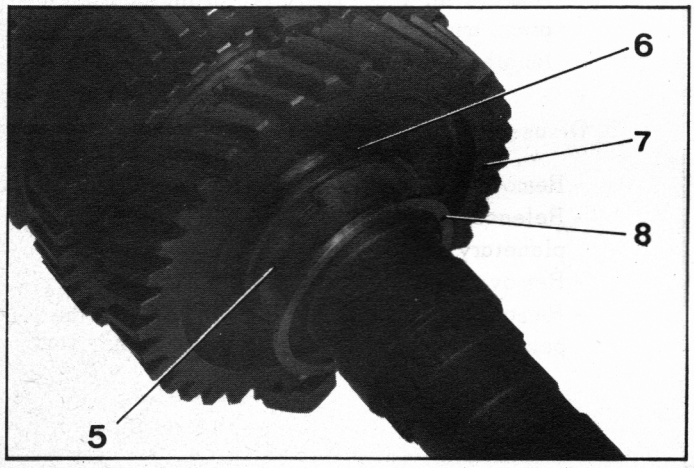

c) Remove the 2nd gear idling pinion :

Release the washer (8) and remove the two half-washers (5) and (6).

7569

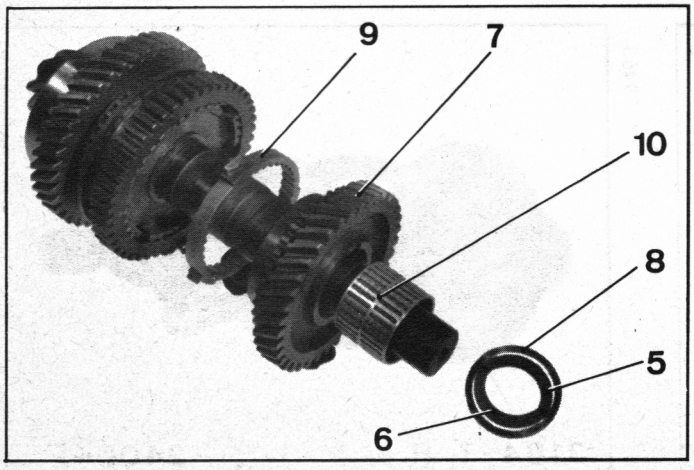

Remove :

- the 2nd gear pinion (7),
- the needle cage (10), or the dowel and their spring,
- the 2nd gear synchro ring (9).

7871

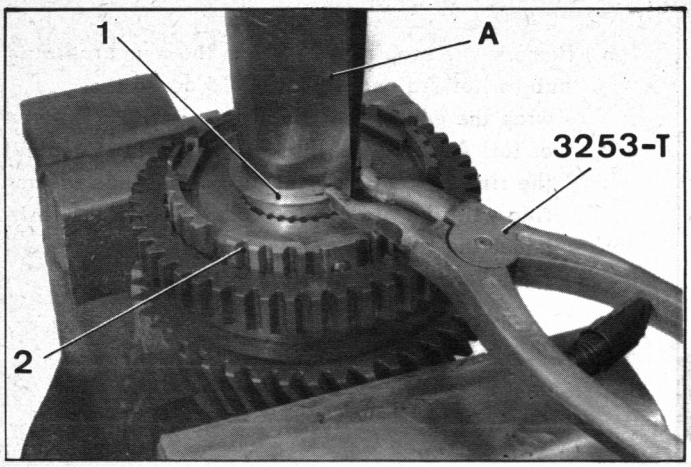

7299

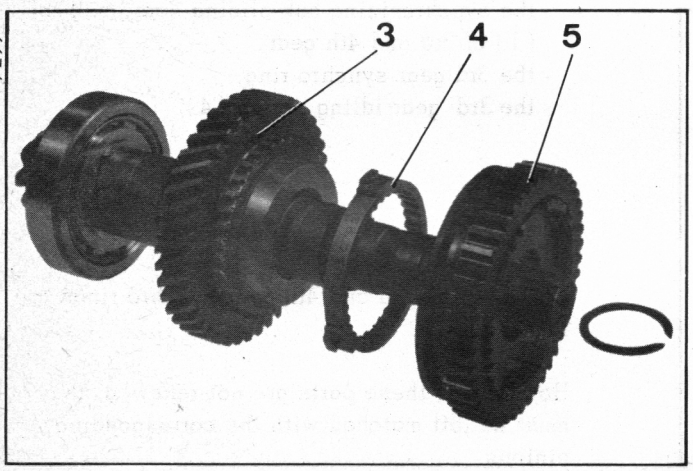

11240

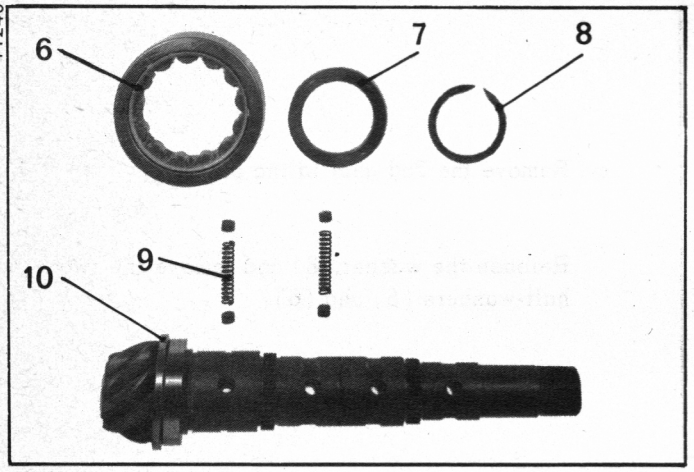

d) Remove the stop ring (1) of the 1st and 2nd gear synchro gub (2). To do so :
Wrap the body of the drive pinion with a sheet of foil (0.10 mm thickness).
Hold it against the ring (1).
Slightly separate the ends of the ring with the aid of plier 3253-T. Slip the foil under the ring (1). Slide the ring and the foil along the body of the pinion.
Remove :
- the 1st and 2nd gear synchronizing hub-sliding gear assembly (5),
- the 1st gear synchro ring (4),
- the 1st gear idling pinion (3),
- the dowel pins and their springs (9) *(if fitted)*.

NOTE : The 1st and 2nd gear synchro rings are identical.
However, if these parts are not renewed, they must be left matched with the corresponding pinions.

e) If necessary, remove the front bearing of the bevel pinion. To do so :

Remove :
- the stop ring (8),
- the thrust washer (7),
- the bearing (6).

Remove the inner ring (10) of the bearing press and tube (inside diameter = 50 mm, length = 60 mm).

5. Disassemble the differential :

- Remove the pin (14) and clear the spindle (12).
- Release the satellite gears (16) and then the planetary gears (15).
- Remove the differential ring (13).
- Remove the tapered bearings (11) (Use the all-purpose extractor 2400-T and pad 3184-T.H).

7396

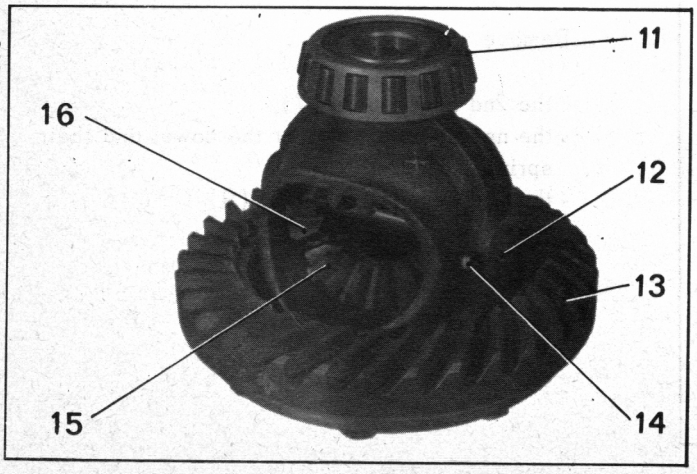

9463

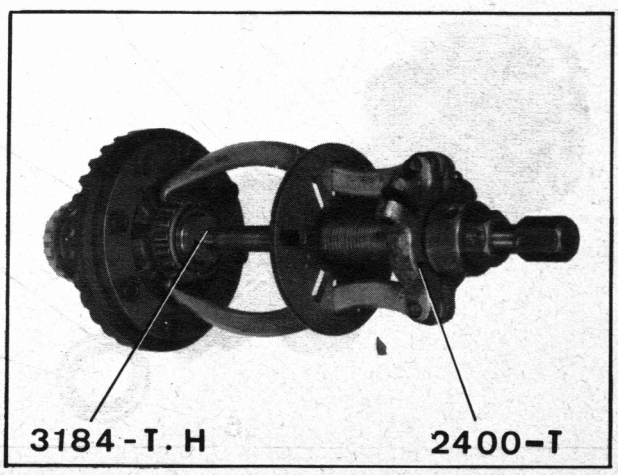

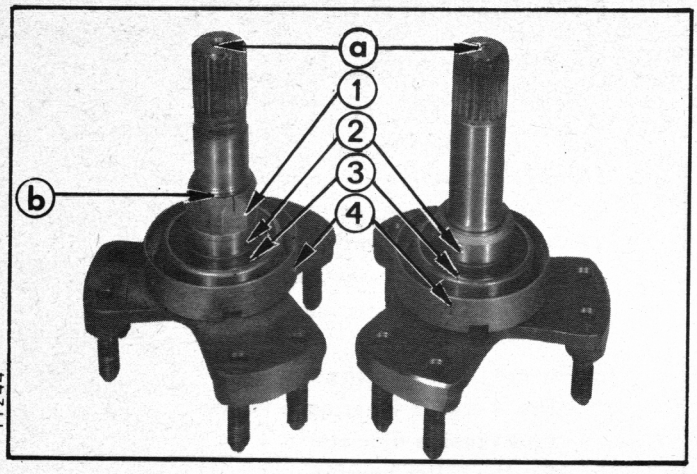

11244

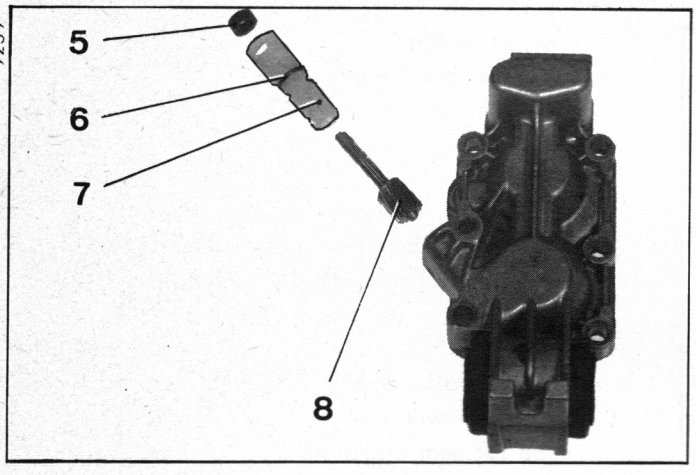

9239

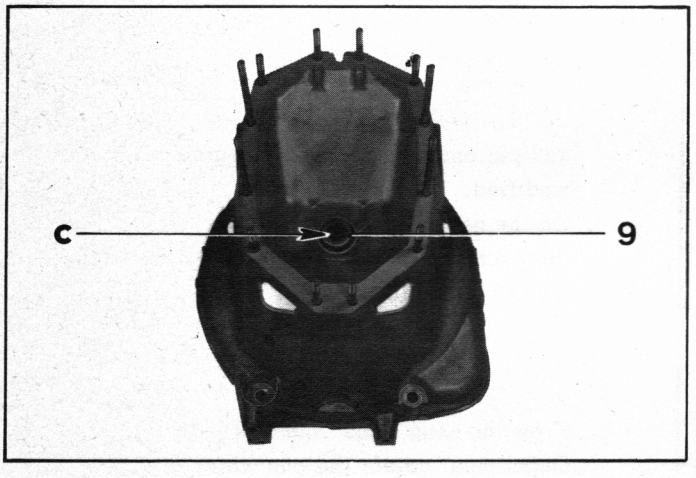

9188

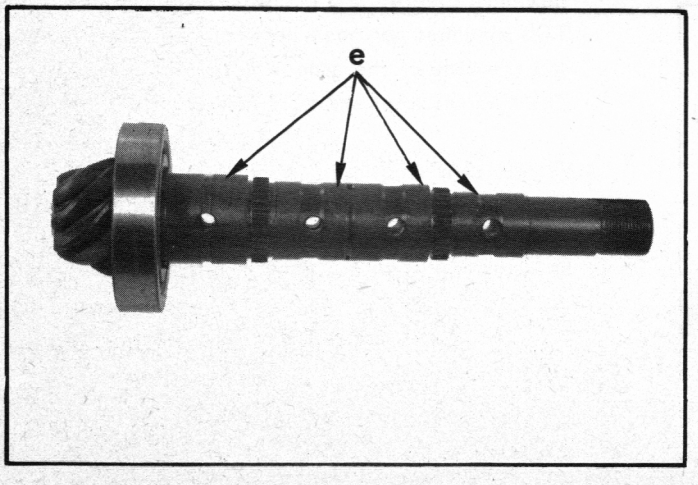

11241

Manual 810-2

6. Strip down the differential shafts :

- Grease the visible portion « b » of the thread and remove the nut (1) (if fitted).
- Remove the bush (2).
- Remove the bearing (3) : use a universal extractor resting on the ring-nut (4) as close as possible to the shaft.

NOTE : The extractor used should have a central screw fitted with a ball to avoid damaging end « a » of the shaft.

7. Strip down the rear cover :

Release the speedometer socket (7) from the cover.
Uncouple the speedometer drive gear (8).
Remove joints (5) and (6).

8. Strip down the clutch housing :

Remove the studs (stud remover 2410-T).
Remove the seal (9) of the control shaft : insert the tip of a screwdriver under the metallic flange « c » of the joint and lever to free the joint from its housing.

9. Clean the parts :

IMPORTANT : The bearing surfaces « e » of the different gears on the bevel pinion should be free from defects.

CAUTION : Any grinding of these surfaces is strictly prohibited especially on the bearing surfaces of the 1st, 3rd and 4th gear wheels which have undergone special surface treatment.

III . PREPARATION OF THE ASSEMBLIES

1. Prepare the differential shafts :

Fit on each shaft :

- the bush -nut (4),
- the sealed bearing (3) (fit the bearing on a press using a tube having an inside diameter of 26 mm, an outside diameter of 34 mm and a length of 120 mm),
- the bush (2).

IMPORTANT : The bush (2) (against which the seal bears) must not show any trace of scratches or damage. If it does, renew it.

Fit and tighten the nut (1) to 140 to 160 mΛN (14 to 16 m.kg) (if necessary).

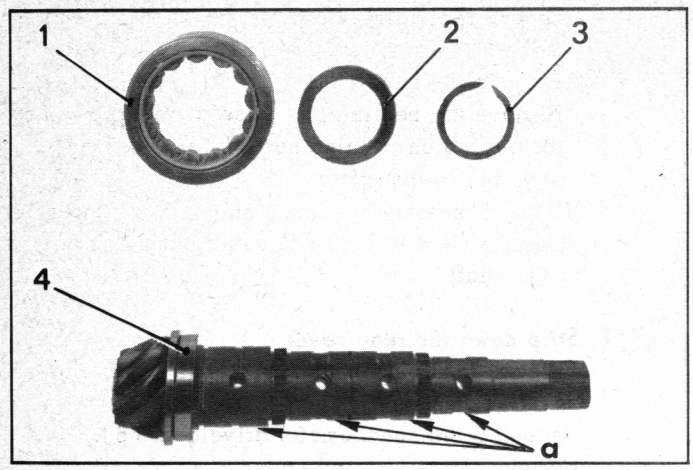

11240

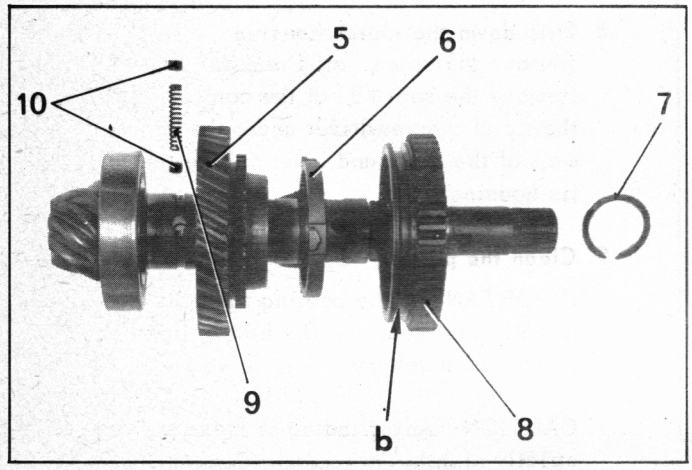

11687

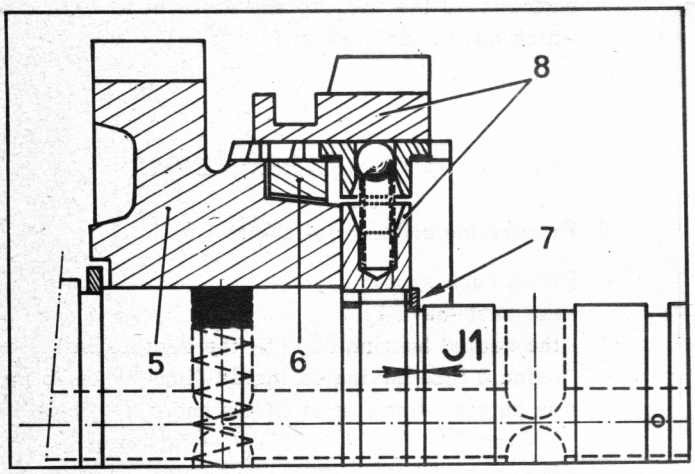

G. 33-19

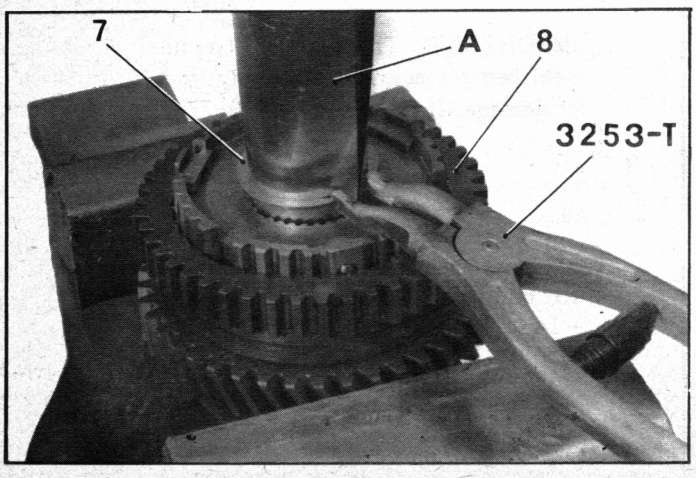

7871

2. Prepare the bevel pinion assembly :

IMPORTANT : *The bearing surfaces « a » of the wheels of the 1st, 2nd, 3rd and 4th gears on the shaft having been given a special surface treatment, all traces of scratches or damage risk causing seizure of operating parts.*
The necessary precautions should, therefore, be taken during disassembly of these parts.
Oil all parts before fitting.

a) Fit the roller bearing :
- Press fit the inner cage (4) with the aid of a tube (inside diameter = 45 mm, length = 220 mm).
- Fit the roller bearing (1) with the smallest bore of the roller cage on the gear tooth side of the pinion.
- Fit the thrust washer (2), *the face not showing any inscription on the roller side.*
- Fit the stop ring (3) with the aid of pliers 3253-T.

CAUTION : To avoid scoring the bearing surface of the 1st gear pinion, use a sheet of foil as indicated in paragraph d).

b) Fit :
- the retarding dowels (10) and their spring (9) *(if there are any).*
- the 1st gear pinion (5),
- the 1st gear synchro ring (6),
- the synchro hub-sliding gear assembly (8) of the 1st gear, *the groove « b » towards the 1st gear pinion.*

NOTE : *Since March 1, 1971,* the synchro rings and pinions of 1st and 2nd gears have been modified.
On the gearboxes produced prior to that date, the exchange of a ring entails the exchange of the corresponding pinion.

c) *Adjust the axial clearance of the synchro hub of 1st and 2nd gear :*
From the stop rings sold by the Spare Parts Department select the one which will give a maximum clearance **J1 = 0.05 mm** (a shim of 0.05 mm must not pass between the ring (7) and the side of the groove).
The ring thicknesses vary in steps of 0.04 mm.

d) Fit the stop ring (7) ☛
Wrap the body of the bevel pinion with a sheet of foil A (thickness = 0.10 mm).
With the aid of pliers 3253-T, slightly separate the ring ends (7). Engage it on the foil. Slide the foil and ring assembly until the ring can insert itself in its groove.

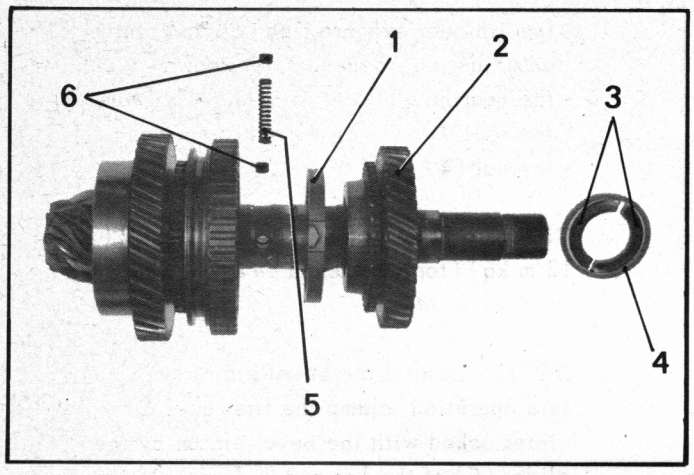

e) Fit :
- the 2nd gear synchro ring (1),
- the retarding dowels (6) and their spring (5),
- or the needle cage *(if there is one)*,
- the 2nd gear pinion (2).

NOTE : *Since March 1, 1971*, the synchro rings and pinion of the 1st and 2nd gears have been modified.
On gearboxes produced prior to that date, the exchange of a ring entails the exchange of the corresponding pinion.

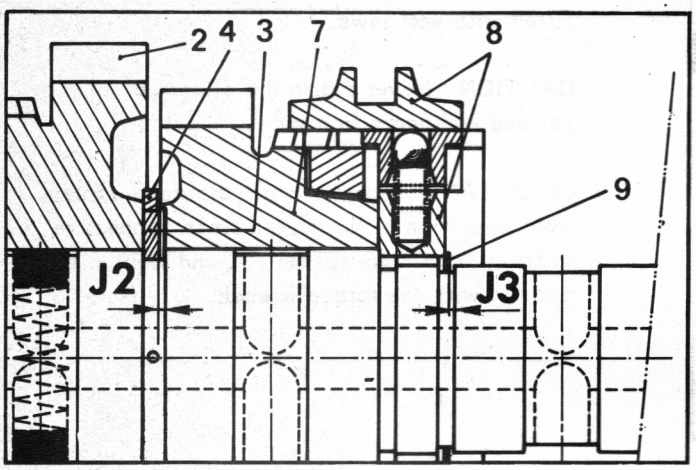

f) *Adjust the clearance of the thrust bearings of the 2nd and 3rd gear wheels by choosing the thickness of the adjusting half-washers (3).*

With the half-washers in place, there should be a maximum clearance **J2 = 0.05 mm** between the half-washer and the side of the groove (a shim of 0.05 mm should not pass).
The thickness of the half-washers is graduated in steps of 0.03 mm. Choose the thickest half-washer able to be fitted in the groove.

NOTE : The two half-washers must have the same thickness.

Fit the two half-washers (3) on both sides of the stop lug « a ».
Fit the washer (4).

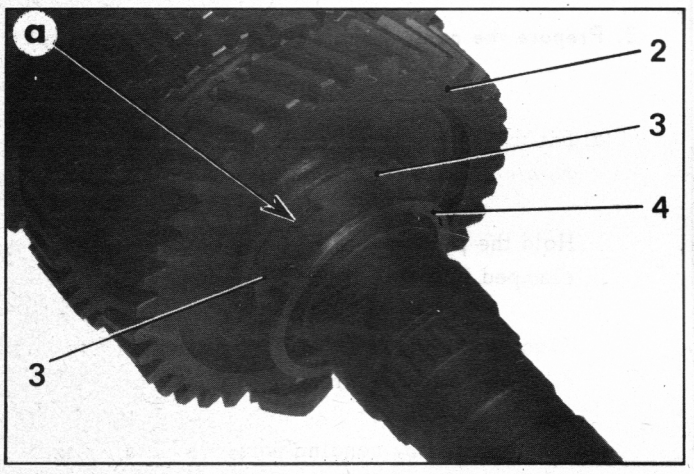

g) Fit :
- the 3rd gear pinion (7),
- the 3rd gear synchro ring (10),
- the 3rd and 4th gear synchro hub-sliding gear assembly (8).

NOTE : The assembly (8) is symmetrical.

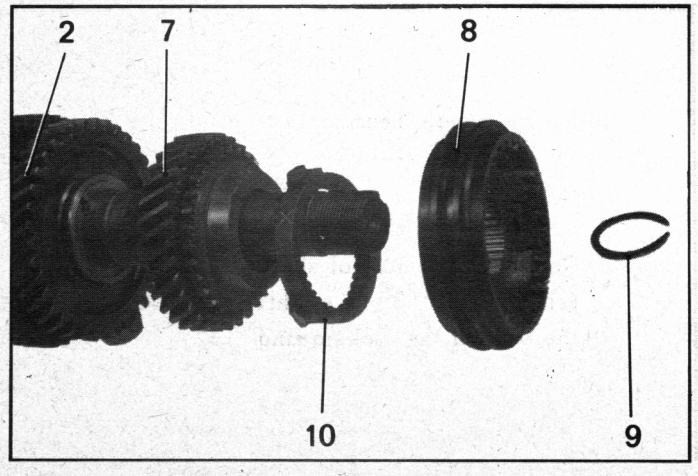

h) *Adjust the end clearance of the synchro hub of the 3rd and 4th gears :*
This clearance J3 must be a maximum of 0.05 mm.

Proceed in the same way as for the synchro hub of the 1st and 2nd gears.
(See paragraph c)).

i) Fit the stop ring (9).

Proceed in the same way as for the synchro hub of the 1st and 2nd gears.
(See paragraph d)).

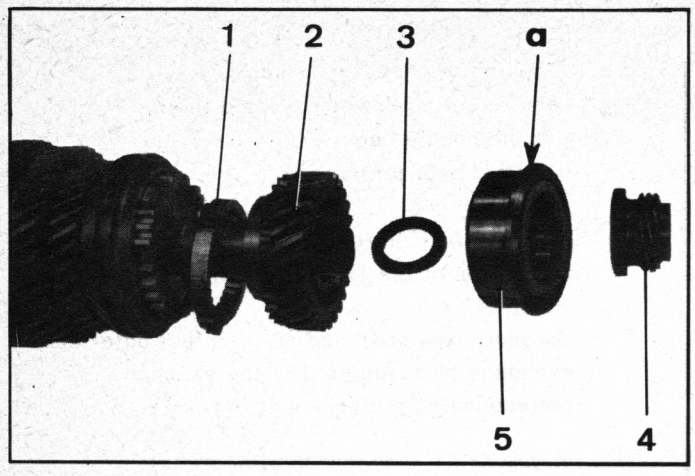

7292

j) Fit :
- the 4th gear synchro ring (1) and pinion (2),
- an adjusting washer (3) of known thickness,
- the bearing (5), *the shoulder « a » pointed towards the rear of the bevel pinion,*
- the nut (4).

Tighten the nut (4) to 100 to 120 mΛN (10 to 12 m.kg) (torque wrench) *without knocking over the metal.*

NOTE : To hold the bevel pinion still during this operation, clamp the first gear pinion (7) (interlocked with the bevel pinion by the slider (6) of the 1st and 2nd gears) in a vice fitted with soft jaws.

CAUTION : Never clamp the slider (6) of the 1st and 2nd gears in a vice.

IMPORTANT : For the conic distance adjustment operation of the pinion, it is imperative to fit an adjusting washer (3) and tighten the nut (4) with the torque wrench.

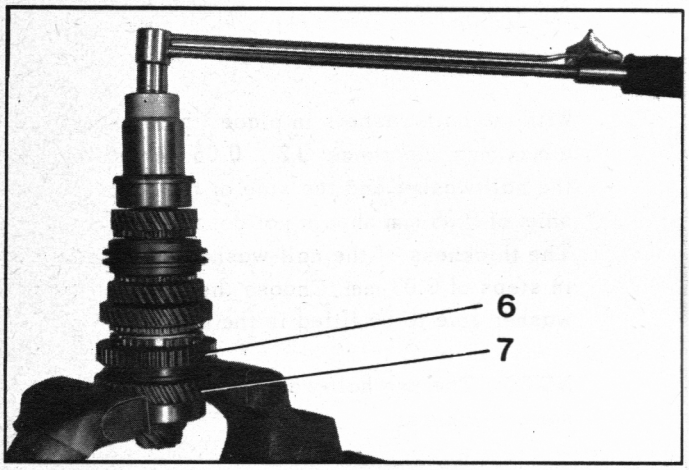

7415

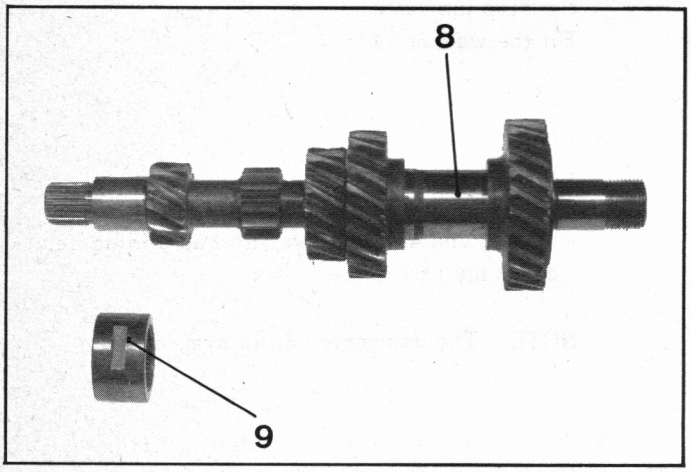

-9088

3. Prepare the control shaft primary shaft assembly :

a) Fit the ball bearing (11), *with the shoulder « b » pointed towards the rear.*

Hold the primary shaft by one of its pinions clamped in a vice fitted with jaws.

Tighten the nut (12) to 70 to 85 mΛN (7 to 8.5 m.kg) (torque wrench).

Lock the nut by bending back the metal in the groove of the shaft.

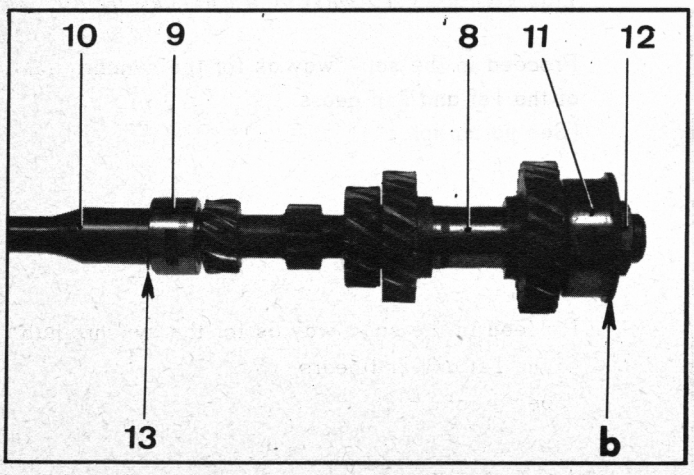

9087

b) Fit the needle bearing (9).

c) Couple up the control shaft (10) to the primary shaft (8) by slightly separating the ends of the locking ring (13).

7904

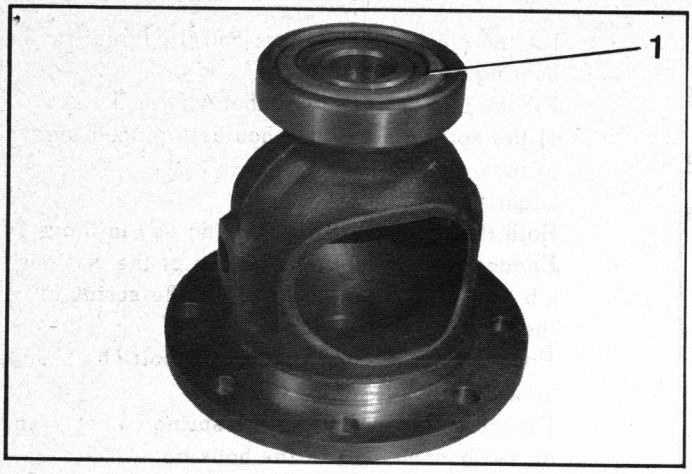

7903

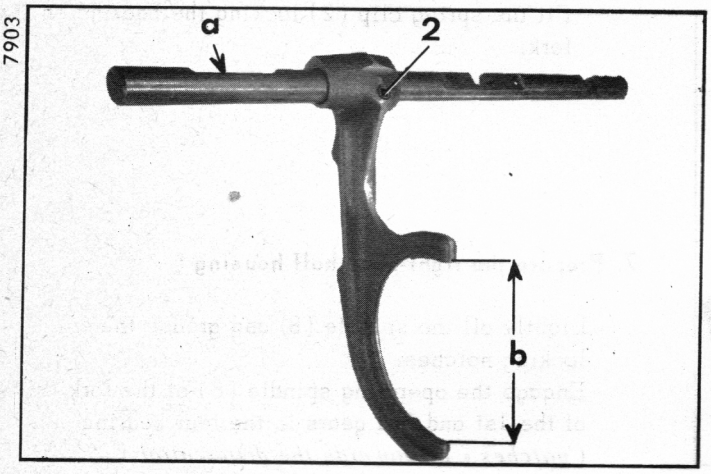

9187

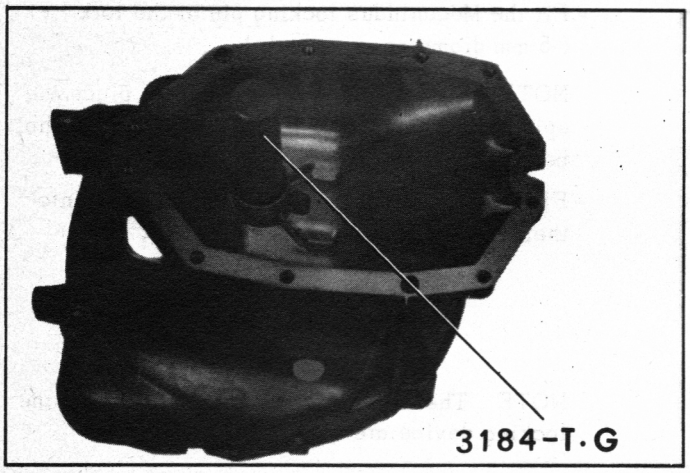

9188

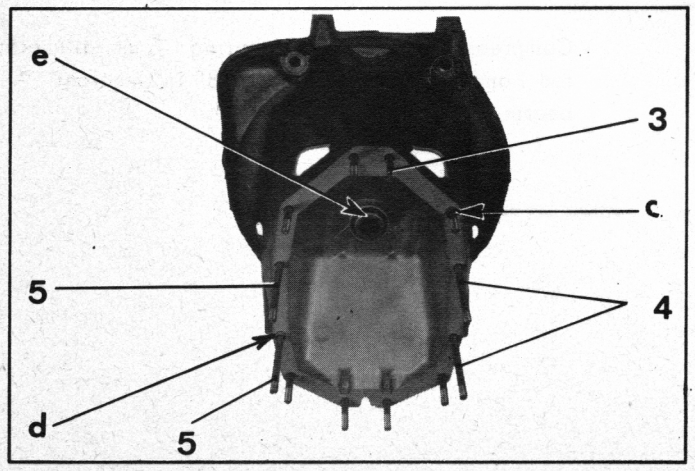

4. Prepare the differential casing :

Press fit the conical roller bearings (1) with the aid of a tube (inside diameter = 36 mm, outside diameter = 45 mm, length = 40 mm).

NOTE :
- Do not reverse the outer cages of the bearings,
- The differential casing should be completely fitted only after the adjustment on the bevel gear.

5. Prepare the 3rd and 4th gear fork :

NOTE :

- The opening « b » of the 3rd and 4th gear fork is smaller than that of the 1st and 2nd gear fork.
- The operating pin of the 3rd and 4th gears is recognizable by the flat part in « a » (interlock plunger passage).

Couple up the fork to the pin (see illustration for positioning).
Fit the Mecanindus locking pin (2).
Lightly oil the spindle and grease the locking notches.

6. Prepare the clutch housing :

a) Fit the seal on the control shaft :
Smear the housing bore and the periphery of the seal with grease.
Fit the seal (metallic flange « e » visible on the studs side) with the aid of mandrel 3184-T.G and a mallet.

b) Fit the assembly studs (use tool 2410-T).
NOTE : The shortest threaded portion of the studs fits into the clutch housing.
The studs are of three different lengths,
Fit them in the following manner :
- in (4) and (5) : the four longest studs.
- in (3) : the average length stud,
- in the other locations : distribute the shortest studs.

NOTE : Make sure that there are two centring bushes present in « c » and « d ».

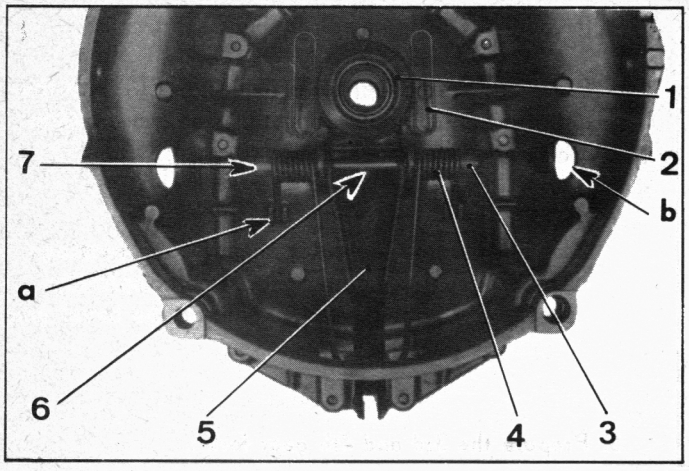

9242

c) Fit the clutch release fork and the thrust bearing :
Fit the two anti-noise bushes (3) in the coils of the springs (4), the shoulders placed face to face.
Lightly oil the pin (7).
Hold the fork (5) and its spring (4) in place.
Engage the pin (7) through one of the orifices « b » of the housing and then in the spring of the fork and its bearings.
Position the pin and tighten the bolt (6) (shake-proof washer).
Fit the two free ends of the spring (4) resting on the bosses « a » of the housing.
Fit the bearing (1) (support previously oiled).
Fit the spring clip (2) locking the bearing on the fork.

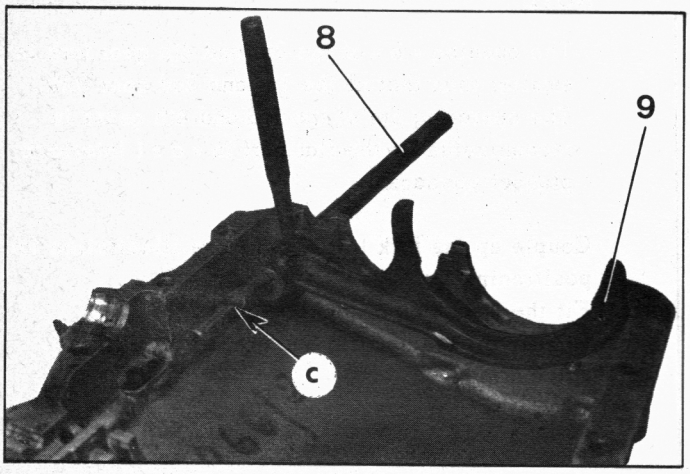

7869

7. Prepare the right-hand half housing :

- Lightly oil the spindle (8) and grease the locking notches.
- Engage the operating spindle (8) of the fork (9) of the 1st and 3nd gears in the rear bearing *(notches « c » towards the differential).*
- Engage the fork (9) on the spindle (8).
- Fit the Mecanindus locking pin of the fork (9) (5 mm diameter pin-punch).

NOTE : When fitting the locking pin, place the spindle and fork assembly against the rear shaft bearing to avoid damage.

- Fit the locking spring (10) and ball (11) into their housing (greased beforehand).

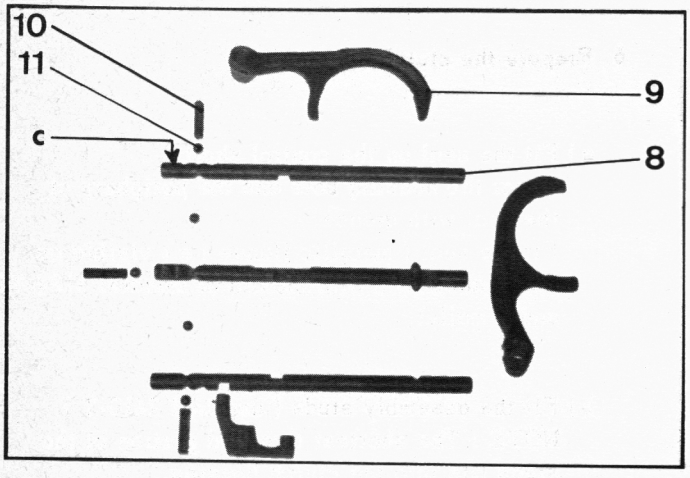

7401

NOTE : The five balls and three springs of the locking device are identical.

- Compress the ball and the spring (5 mm diameter rod) and engage the spindle (8) in the front bearing.

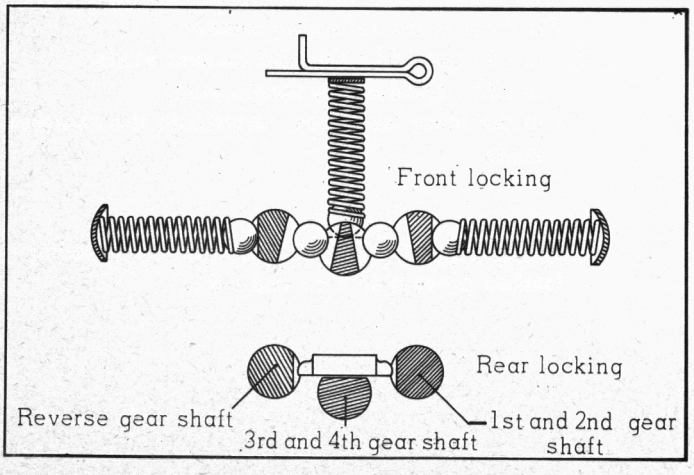

G. 33-11

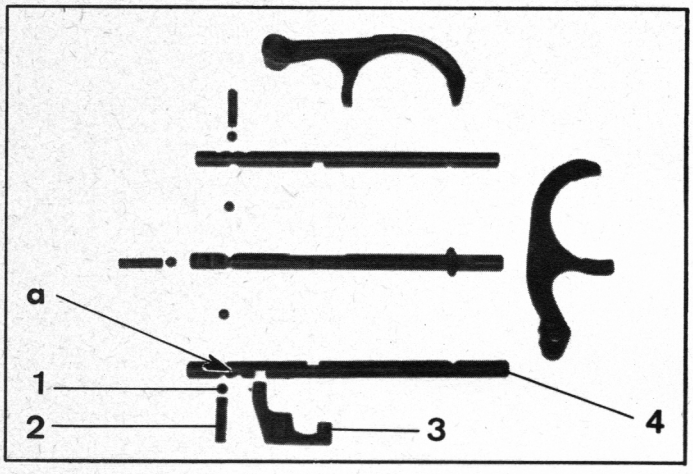

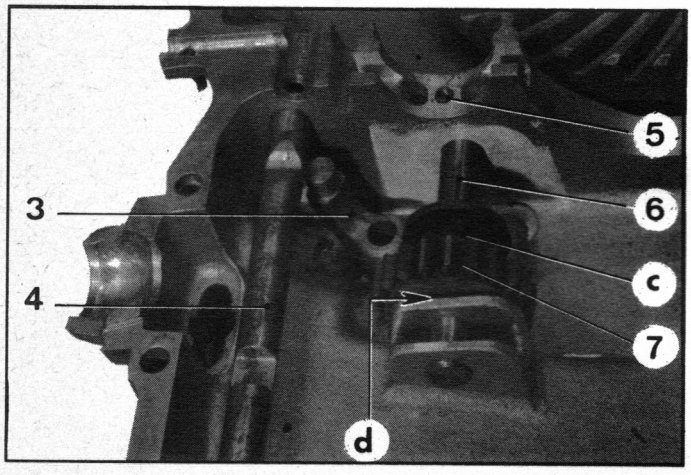

7246

Manual 810-2

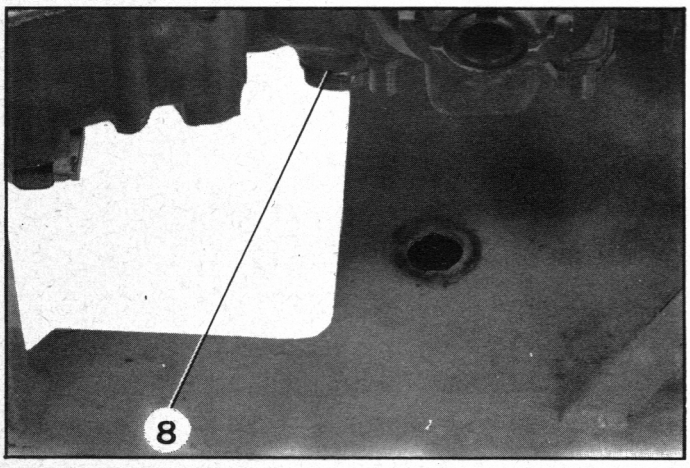

9167

8. Prepare the left-hand half housing :

a) Fit the reverse idler pinion :
Oil the spindle (6), engage it in the rear boss : fit the stop notch towards the differential, perceptibly vertical.

NOTE : *On vehicles produced since April 1971* a spacer is inserted in « d » between the pinion (7) and the rear boss.

Offer up the pinion (7), *with the groove « c » towards the differential.*

Complete fitting the spindle (6) and engage the cylindrical pin (5) fully in its housing.

NOTE : The pin (5) which locks the needle bearing of the primary shaft must lightly protude beyond the thrust face of this bearing.

b) Fit the spindle operating the reverse gear lever :

- Oil the operating spindle (4) and grease the locking notches.
- Fit the spring (2) and the ball (1) of the locking device (greased beforehand) into housing « b » (See Note paragraph 7).
- Engage the spindle (4) *(locking notches « a » towards the differential)* in the rear bearing.
- Compress the locking ball and spring (5 mm diameter rod) and engage the spindle (4) in the front bearing.

c) Engage the reverse gear lever (3) under the spindle (6) and fit it in the groove of the pinion (7) and the groove of the spindle (4).

Fit and tighten the spindle (8) of the lever (3) (greased beforehand) to 27 to 33 m.N (2.7 to 3.3 m.kg).

9. Fit the seal on the differential shafts :

On each half housing : grease the bore of the housing and the periphery of the seal.
Offer up the seal in its bore, *the lip towards the inside of the box.*

a) *Gearbox without bearing circlip :*

Fit the seal with the aid of mandrel 3184-T.E (contained in the toolbox).

NOTE : After fitting, the seal is recessed by 3 ± 0.5 mm in relation to the thrust face of the differential shaft bearing.

b) *Gearbox with bearing circlip :*

Fit the seal (2) with the aid of a tube, 51 mm diameter, or socket spanner 36 mm diameter.

Insert the seal up to the level of the circlip groove. Insert the circlip (1) into the bore using a sheet of foil A with a length of 150 mm, thickness 0.20 mm and width 60 mm. Use the tube or the spanner to complete the positioning.

Remove the foil and finish fitting the circlip and the seal with the aid of a mandrel used for gearboxes without circlip.

NOTE : After fitting, one of the edges of the circlip must be about 10 mm from the drain hole « a ».

11247

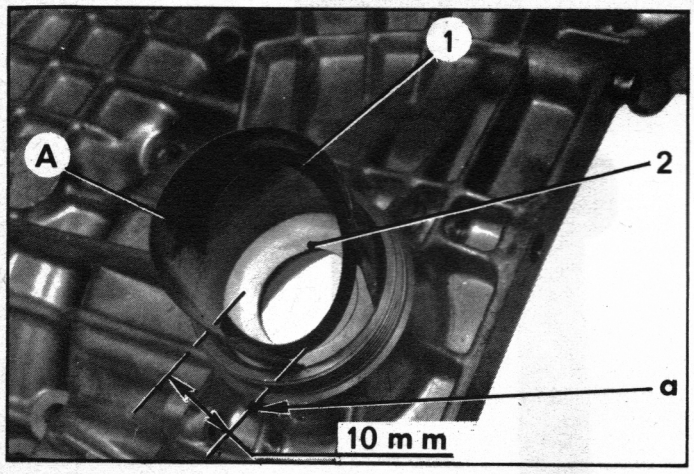

TOOL BOX 3184-T

12010

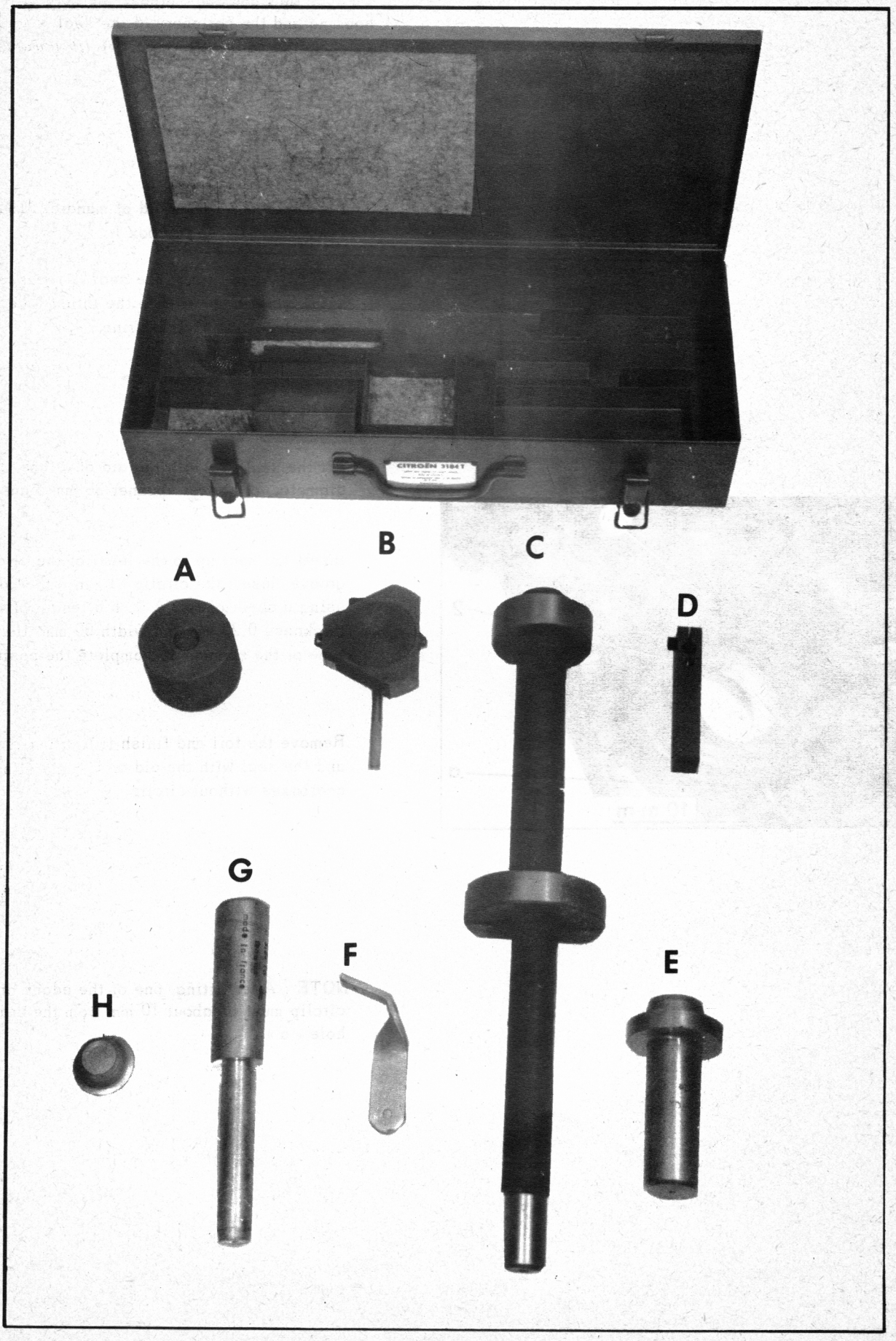

G. 33-13

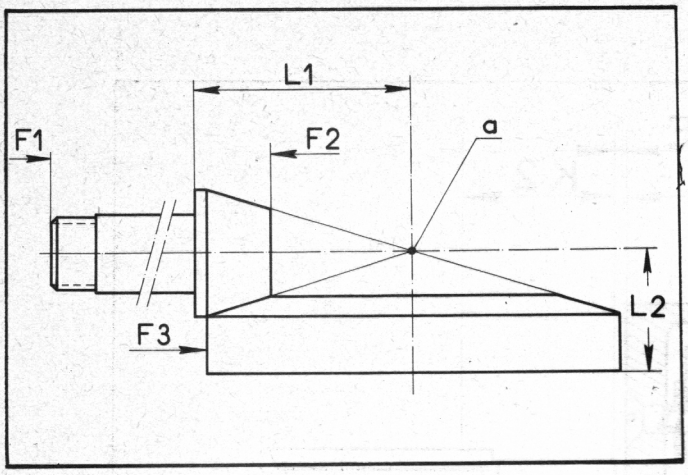

7696

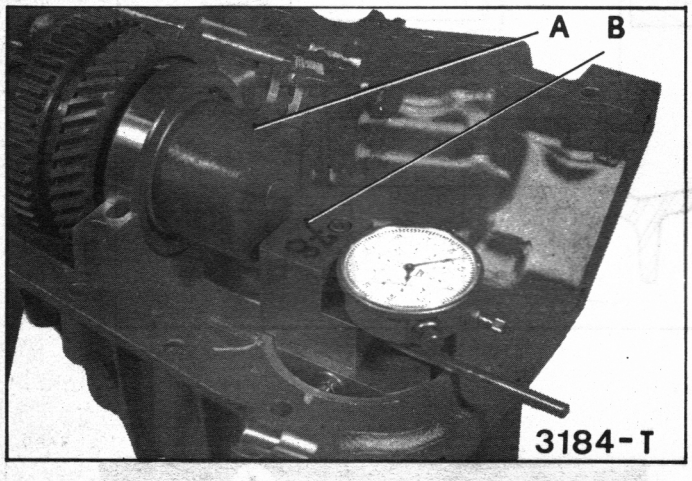

Manual 810-2

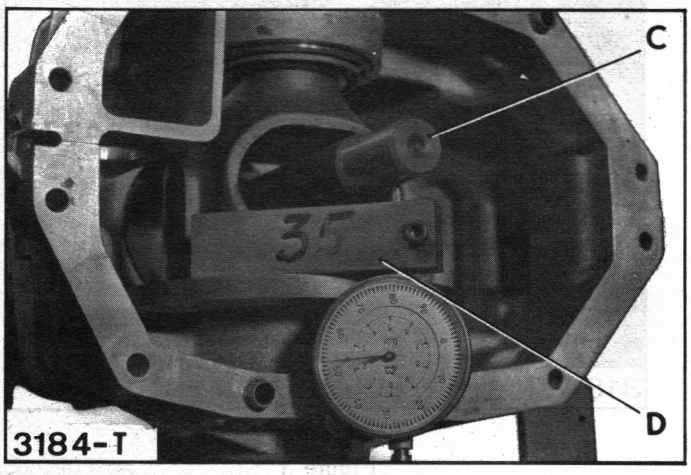

7699

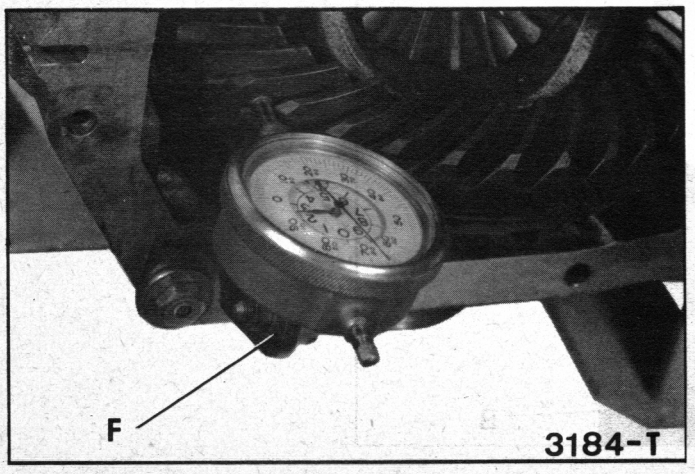

9083

IV. ADJUSTING THE CONIC DISTANCE OF THE BEVEL PINION.

NOTE : This adjustment is of the utmost importance. Giving the teeth the correct setting will ensure silence and long service from the crown wheel and pinion.

The bevel pinion and the crown wheel are paired and marked with identical inscriptions engraved with an electrical scriber on face F 1 of the pinion shaft and the side F 3 of the crown wheel (never separate a bevel coupling).

NOTE : On some couplings, the pairing mark of the pinion is engraved not on face F 1 but on face F 2 of the pinion.

1. Adjustment principle :

In addition to the pairing mark, two dimensions are engraved on side F 3 of the wheel.

The larger dimension (ex. 82.05) represents the distance L 1 from the intersection « a » of the bevel gear centre lines to the thrust face for the roller bearing on the bevel pinion.

The smaller dimension (ex. 40.00) represents the distance L 2 of the intersection « a » of the bevel gear centre lines to the thrust face of the crown wheel on the casing.

To obtain these dimensions, it is necessary to adjust the position of the pinion and that of the wheel with the aid of washers whose thicknesses are to be determined.

The adjustment of the conic distance should be made by using the adjusting fixture 3184-T together with dial gauge 2437-T.

To adjust the position of the bevel pinion, use cap A and dial gauge support B.

To adjust the crown wheel, use mandrel C and dial gauge support D.

To check the backlash, use the dial gauge support F.

AL. 33-10

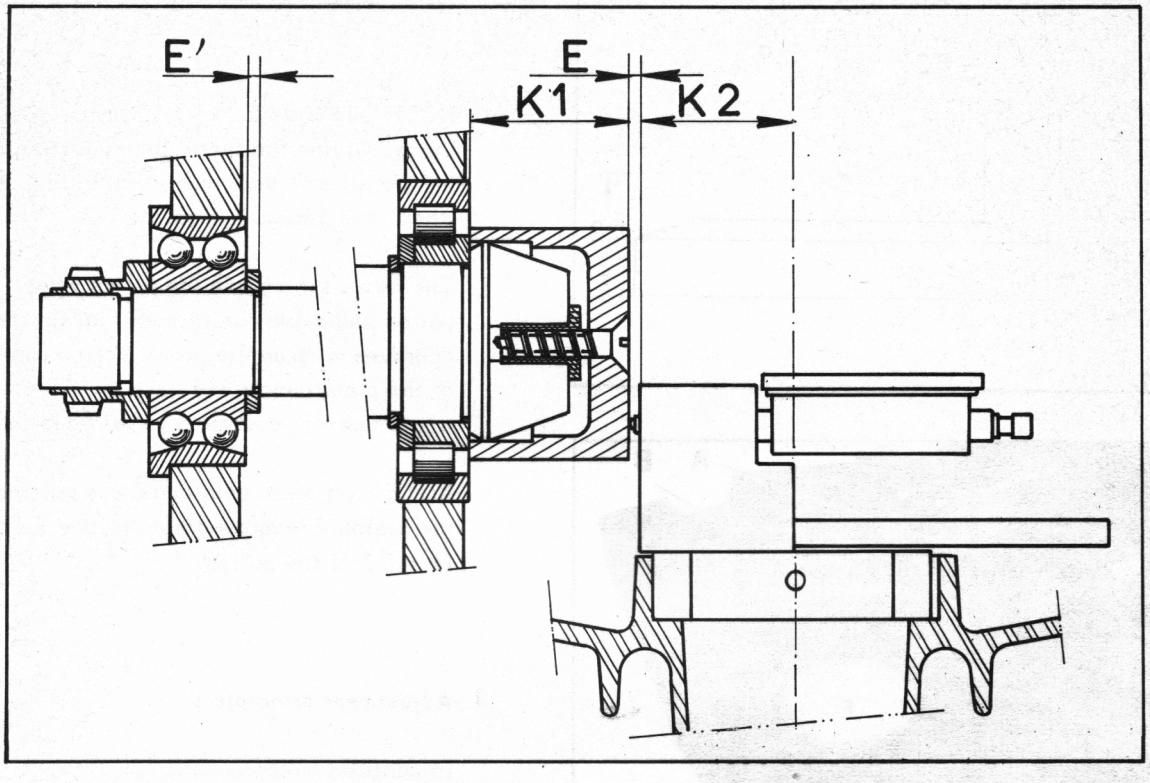

Figure 1

9247

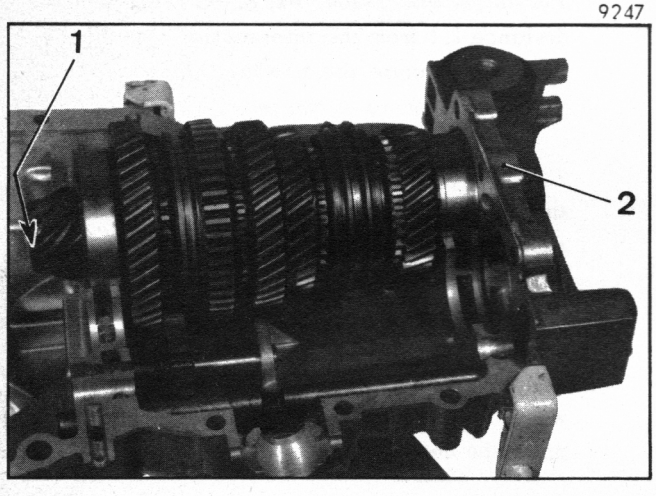

Figure 2

7689

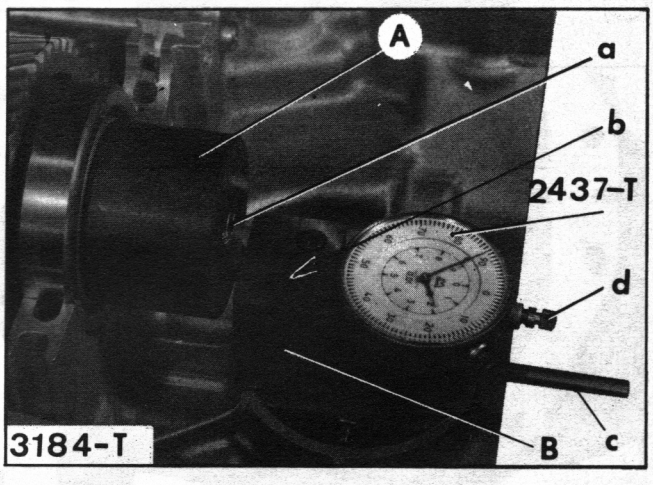

Figure 3

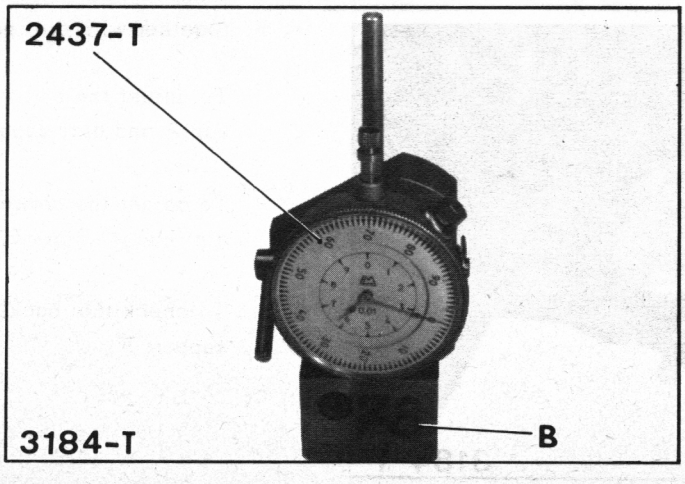

Figure 4

2. Adjusting the bevel pinion position :

a) Fit the bevel pinion and gear assembly in the left-hand half-casing. Fit the rear cover (2). Hold it in place with two bolts.
Note the larger dimension engraved on the crown wheel. It is for example : L1 = 82.00 mm.

b) Fit the cap A of assembly 3184-T as shown in figure (3). Hold in place with the screw « a » screwed into the plastic cap (1).

c) Carefully clean the differential bearing housing on the half-casing. : it should be free of any traces of blows or burrs (defects).

d) Fit dial gauge 2437-T on support B. Place the support on a surface-plate (see figure 4).
Bring the zero on the mobile dial opposite the large needle of the gauge. Mark the position of the integrating needle.
Example : integrating needle between 6 and 7.
The assembly of cap A and support B with the dial gauge in the calibration position corresponds to a distance K + K2 = 78 mm. This dimension is engraved on the support B at « b ».

e) Fit support B into the casing. Fully engage it in the bore of the differential bearing.
Using handle « c », pivot the support first in one direction and then in the other, and immobilize it at the exact point where the large needle change its direction of rotation.
Check the position of cap A : turn the bevel pinion : the gauge should show a maximum variation of 0.20 mm.
If not, change the position of cap A.

f) Ascertain the position of the bevel pinion :
Return the gauge needles to their calibration position (see paragraph d).
Example : integrating needle between 6 and 7 and large needle on zero.
Allow the dial gauge stem « d » to return slowly and count the number of revolutions and fractions of a revolution made by the large needle until the stem again contacts the cap.
Example : the large needle turns through 4.44 revolutions, therefore E = 4.44 mm.
The position of the bevel pinion is therefore : K1 + K2 + E or 78 + 4.44 = 82.44 mm
The pinion is too far from the differential centre line : 82.44 - 82 = 0.44 mm
It is, therefore, necessary to replace the existing washer by one of thickness greater than 0.44 mm.
Example : the existing washer has a thickness of 2.50 mm.
It must be replaced by another with thickness : E = 2.50 + 0.44 = 2.94.

NOTE :
If the distance read is smaller than the dimension engraved on the bevel pinion, the latter is too close to the differential centre line and it is, therefore, necessary to replace the existing washer by a thinner one.

3. Remove the adjusting fixture, the rear cover and the crown wheel and pinion assembly.

4. Remove the nut from the bevel pinion.
Remove the bearing and the adjusting washer, replace it by a washer of known thickness.

NOTE : The washers sold by the Spare Parts Department have thicknesses graduated in steps of 0.04 mm.
Choose a washer whose thickness comes closest to the value found.
Fit the bearing and the nut. Tighten to 100 to 120 mAN (10 to 12 m.kg) (torque wrench).
Lock the nut by tapping over the metal into the groove of the shaft.

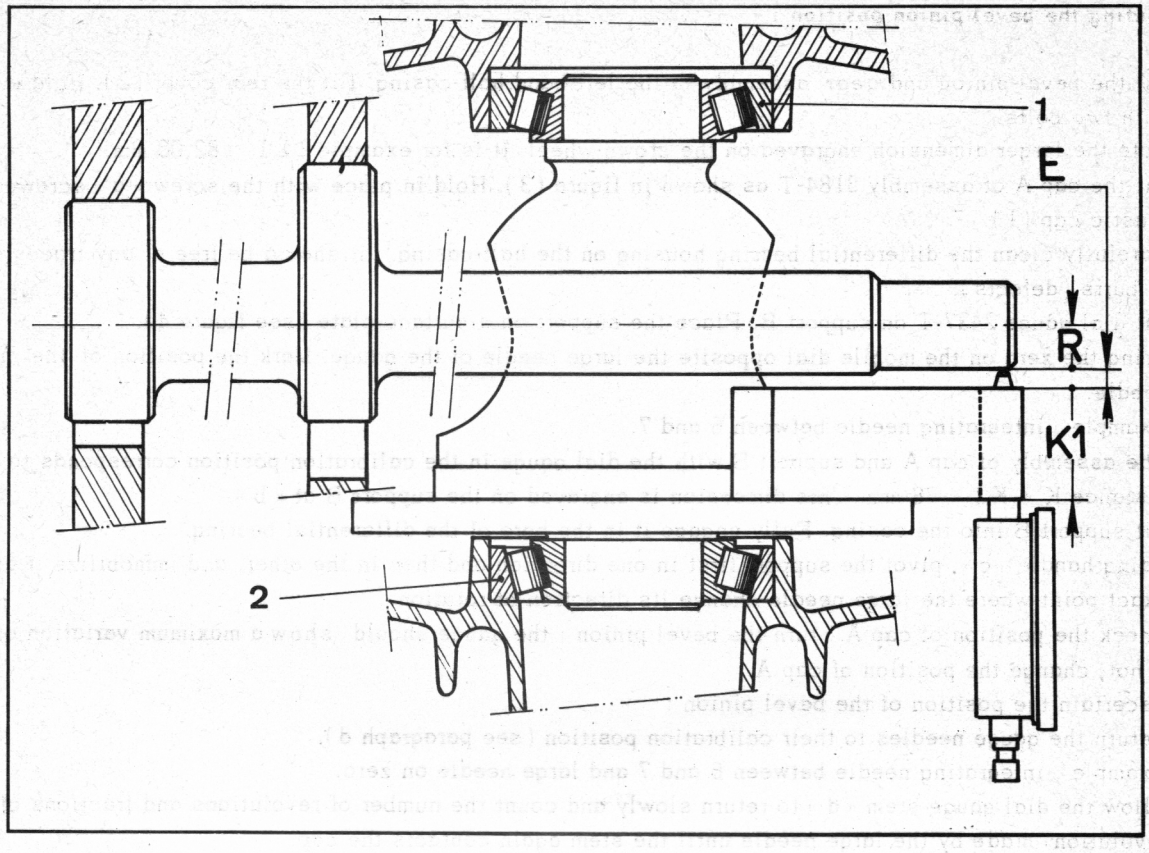

AL. 33-11 a

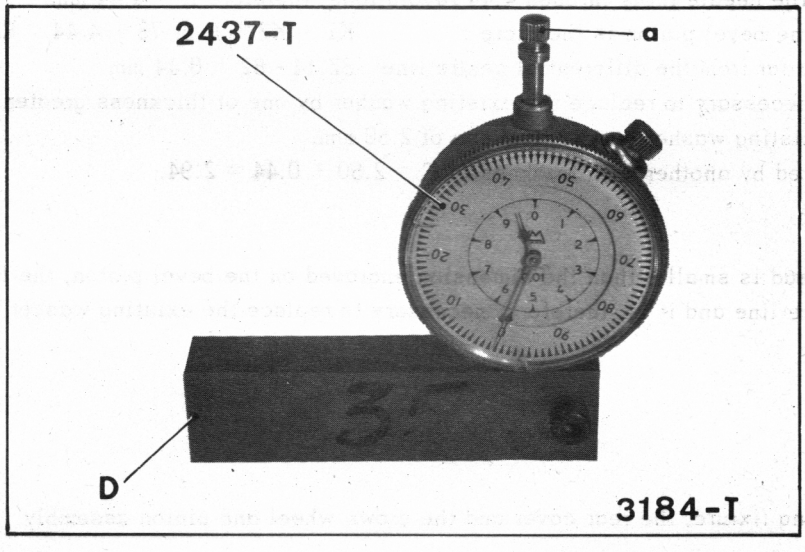

7705

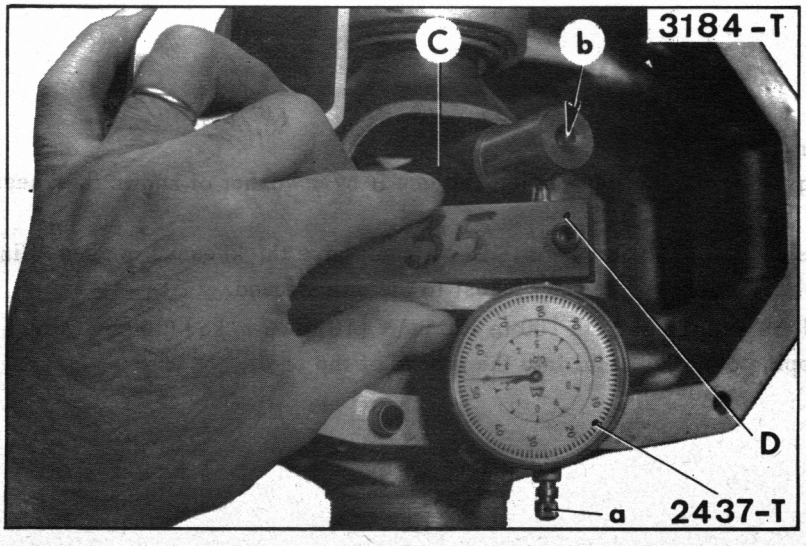

7698

5. Adjust the position of the crown wheel :

a) Adjustment principle : Using shims, it is necessary to arrange that :

- first, the distance between the bearing face of the crown wheel on the casing and the centre line of the bevel pinion equals that engraved on the side of the wheel, thus giving correct inter-tooth gap and contact area.

- secondly, a stress on the bearings to maintain the above settings under the action of the engine torque. This stress virtually corresponds to a pressure exerted on the bearing which is consequently forced inwards in its cages thus causing a displacement of the differential assembly expressed in millimetres. This must be taken into consideration in determining the thickness of the shims. It is evaluated at 0.025 mm per bearing, i. e., 0.05 mm for the two. In the adjustment operation, it is, therefore, necessary to take into account the casing recoil in determining the thickness of the left-hand shim (+ 0.025 mm) and the total stress on the two bearings (+ 0.05 mm) in determining the thickness of the right-hand shim.

b) Fit the outer cage (2) of the left-hand differential bearing in its housing (without shim).
Fit the differential casing .
Position the mandrel C with its end « b » engaged in the orifice of the casing.
Fit the outer cage (1) in its housing in the right-hand half casing (without shim).

NOTE : The bores for the bearing cages must be clean and free of all marks of blows (defects). These cages must slide freely.

- Fit the right-hand half casing.
- Fit the rear cover. Fit the bolts.
- Fit four of the fixing bolts of the half casings.
- Tighten the cover bolts and then those of the half casings.

NOTE : The fitting of the rear cover is necessary for positioning the half casings in relation to one another.

- Make sure that the differential casing is in place and that the outer cage (1) is in contact with the rollers of the bearing.

c) Calibrate the assembly of straight edge D and dial gauge.
Fit straight edge D with a dial gauge 2437-T, place it on a surface plate.. Adjust the gauge position so that it will operate between 8 to 9 mm.
Bring the zero of the mobile dial opposite the large needle.
Mark the position of the integrating needle.

Example : integrating needle between 8 and 9.
The assembly of mandrel C and straight edge D with dial gauge in calibration position corresponds to a distance :

$$K1 + R = 35 \text{ mm}$$

This dimension is engraved on one of the sides of the straight edge.

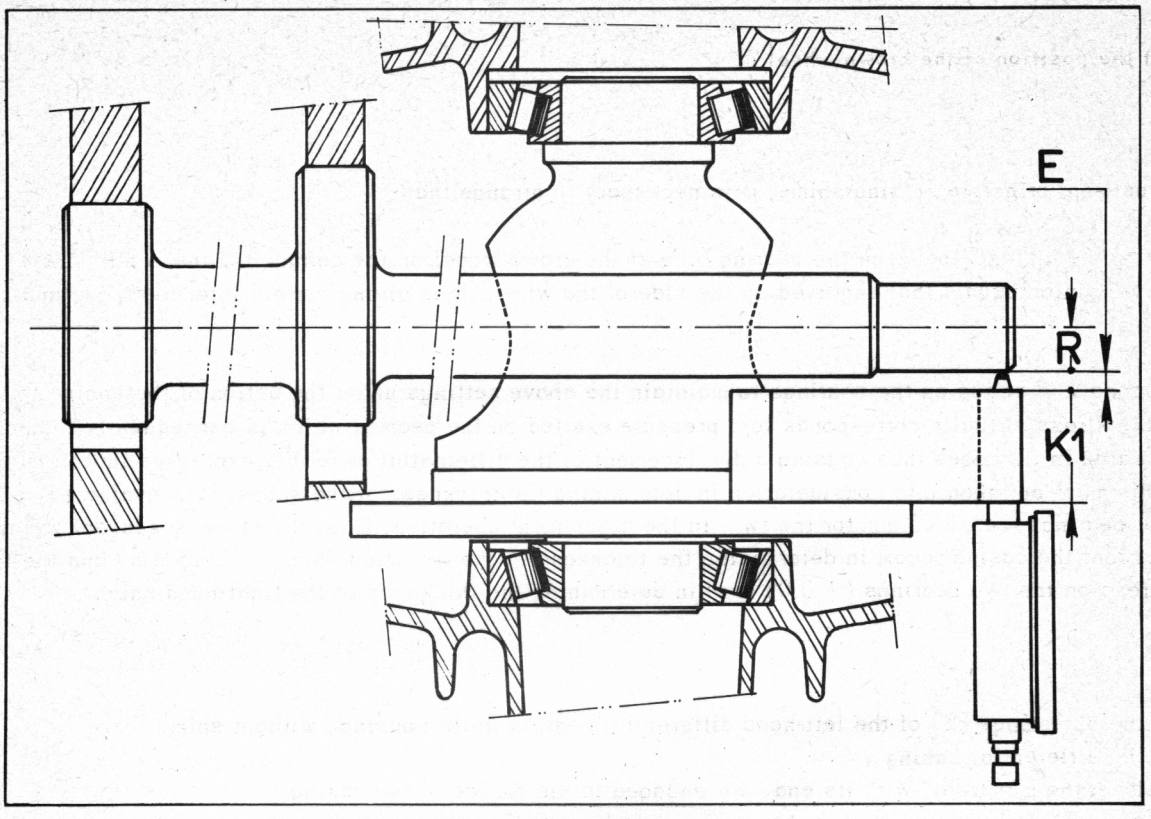

Figure 1

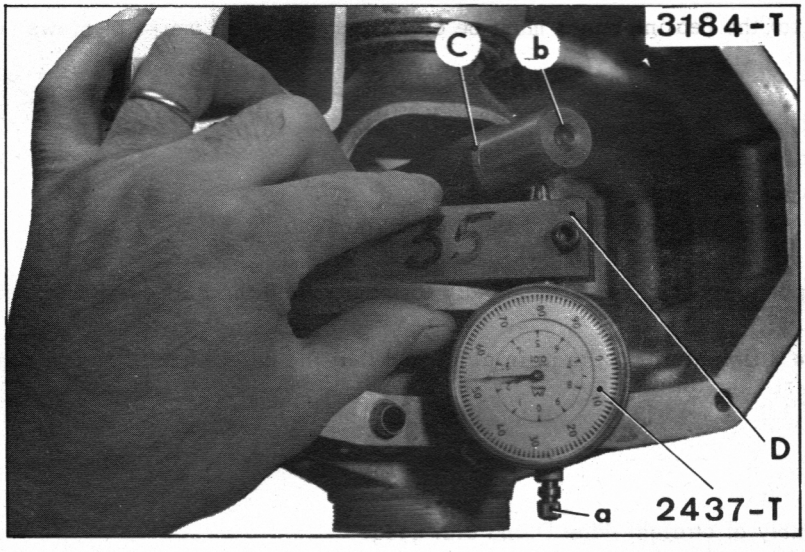

Figure 2

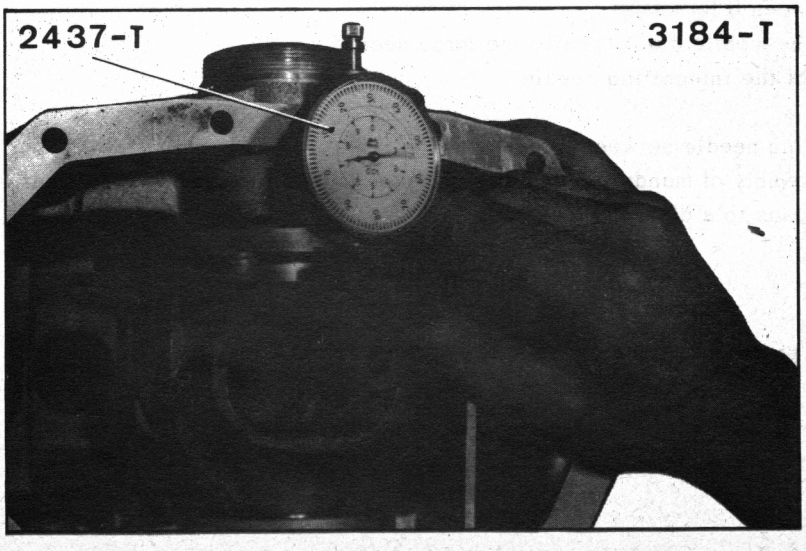

Figure 3

d) Fit straight edge D on the bearing face of the crown wheel on the casing, the dial gauge stem touching the end « d » of the mandrel.

Hold the straight edge against the casing and rotate the straight edge-casing assembly first in one direction, then in the other and immobilize it at the exact point where the large needle changes direction of rotation. Mark the position of the dial gauge needles. Pull on the spindle « a » of the gauge to bring the needles to the calibration position. Then, relase it slowly and count the number of revolutions or fractions of a revolution made by the large needle.

Example : The large needle turns through 7.46 revolutions, therefore : E = 7.46 mm.

The bearing face of the wheel is therefore at a distance from the bevel pinion centre line of :

35 + 7.46 = 42.46 mm

e) Ascertain the thickness of the shim to be placed in the left-hand half casing (see figure 2).

Note the dimension engraved on the crown wheel. For example, this dimensions is 40.00 mm.

To obtain this dimension would require a shim of :

42.46 - 40 = 2.46 mm

It is necessary to add 0.025 mm for the bearing stress. The shim must, therefore, have a thickness of :

2.46 + 0.025 = 2.485 mm

The adjusting washers are sold by the Spare Parts Department in steps of 0.05 mm: choose a washer whose thickness is nearest to the determined value : 2.50 mm.

f) Ascertain the thickness of the adjusting washer to be fitted in the right-hand half casing (see figure 3).

Release the gearbox from the support and place it on the work-bench *with the left-hand half casing uppermost.*

IMPORTANT : Make sure that the differential is in place, with the outer cage of the bearing resting on the shoulder of the right-hand half casing. Also make sure that *the outer cage of the left-hand bearing bears against the rollers.*

Check the calibration of the straight edge-dial gauge assembly.

Place straight edge D against the bearing face of the crown wheel on the casing, with the dial gauge touching the end « b » of the mandrel C.

Hold the straight edge against the casing and measure as previously indicated for the left-hand side.
Example : The large needle turns through 2.45 revolutions, therefore, E = 2.45 mm.

The bearing thrust face of the crown wheel is, therefore, at a distance from the bevel pinion centre line of :

35 + 2.45 = 37.45

Ascertain the thickness of the adjusting washer to be fitted in the right-hand half casing :
The dimension engraved on the crown wheel being 40.00 mm to obtain this dimension would require a shim of : 40 - 37.45 = 2.55 mm without taking into consideration the bearing stress, the total thickness (left and right) of the shims would be 2.46 + 2.55 = 5.01 mm. With the stress of 0.025 per bearing, therefore 0.05 mm for the two bearings, the total thickness would be 5.01 + 0.05 = 5.06 mm.

It has been determined that the left-hand side requires a shim of 2.50 mm. Therefore, the thickness of the shim to be fitted on the right-hand side will be 5.06 - 2.50 = 2.56. Since the shims are available in steps of 0 05 mm, choose a 2.55 mm shim.

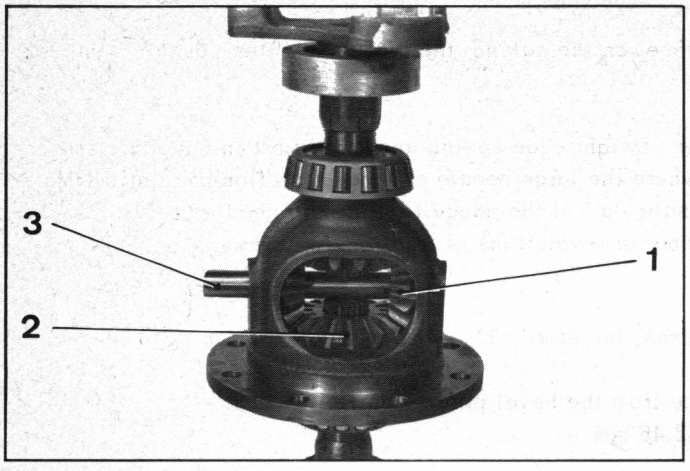

7391

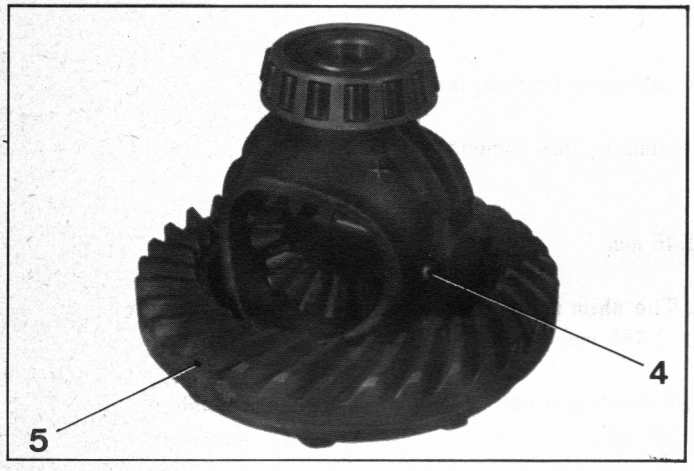

7386

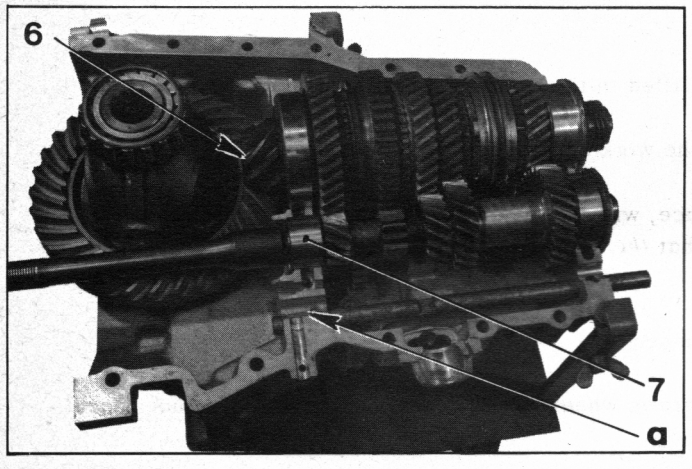

7573

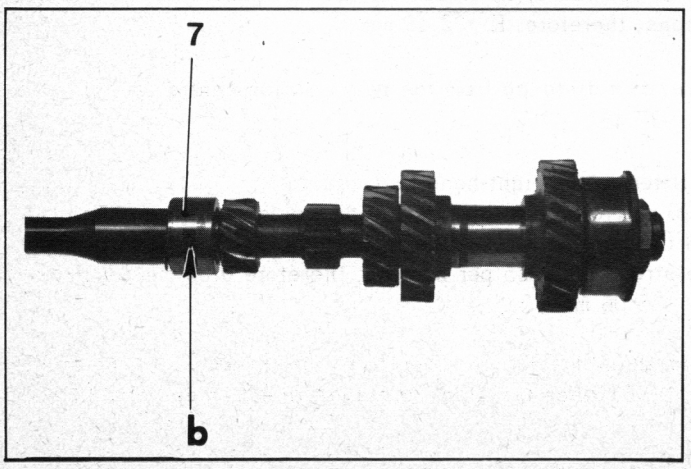

9087

V. FITTING.

1. Fit the differential :

a) Oil the parts. Fit :
- the two planet wheels (2) and hold them in place with the aid of the two differential shaft,
- the satellites (1) and engage the shaft while (3) correctly orientating the pin hole.

Fit the locking pin (4).

b) Fit the crown wheel (5) :
The 9 mm diameter fixing bolts must be fitted with LOCTITE GX. 01 460 01 A and tighten to 48 to 53 mN (4.8 to 5.3 m.kg).
The 10 mm diameter fixing bolts should have the face and threads greased. Tighten them to 80 to 90 mN (8 to 9 m.kg) (torque wrench).
NOTES :
- Do not fit washers under the bolt heads.
- For correct positioning of the wheel, successively tighten the diametrically opposed bolts.

c) Fit the differential in the left-hand half casing.

2. Fit the bevel pinion :

Check the condition of the plastic plug (6). Replace, if necessary.
CAUTION : Be careful not to introduce foreign bodies in the central hole of the pinion, which could reduce lubrication to the bearing surface of the 1st gear wheel.
- Check that the reverse gear intermediate pinion is in its « neutral » position.
- Fit the assembly in the left-hand casing.

3. Fit the drive shaft/primary shaft assembly :

Fit the assembly in the left-hand half casing.
Turn the needle bearing (7) so that the end of the locking pin of the reverse gear intermediate spindle enters the locking notch in the bearing.

4. Fit the lock ball in its housing at « a » (grease beforehand).

NOTE : The five locking balls and three locking springs of the shafts are identical.

5. Checking the crown wheel to pinion backlash :

NOTE : If the adjustment of the conic distance has been carefully carried out, the backlash should be correct.
However, it is preferable to check it.

a) Fit the right-hand casing on the left-hand one (see that the 1st and 2nd gear fork is engaged in the groove of the corresponding sliding gear).
- Fit, but do not tighten, the four assembly bolts of the half casings.
- Fit the rear cover. Tighten the fixing bolts (the rear cover is necessary for the correct alignment of the two half casings).
- Tighten the four assembly bolts of the half casings.

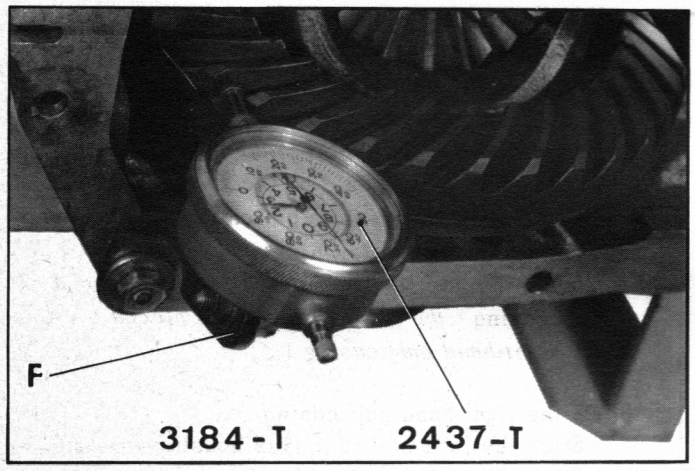

b) On the left-hand casing (as shown in the figure) fit the support F of the assembly 3184-T fitted with a dial gauge so that its moving stem rests perpendicularly on the flank of a tooth on the periphery of the crown wheel.
Measure the clearance by keeping the bevel pinion still, holding it by hand.
The backlash must be between 0.13 and 0.27 mm measured at the point of minimum clearance.

c) Measure and note the clearance on three teeth spaced at intervals of about 120°. Take the average of the three readings :
The difference between any two readings should not exceed 0.1 mm.
Otherwise, the wheel is out of true (it must be replaced), or there is a foreign body between the crown wheel and the differential casing.

d) Remove :

- the dial gauge and its support,
- the rear cover,
- the right-hand half casing.

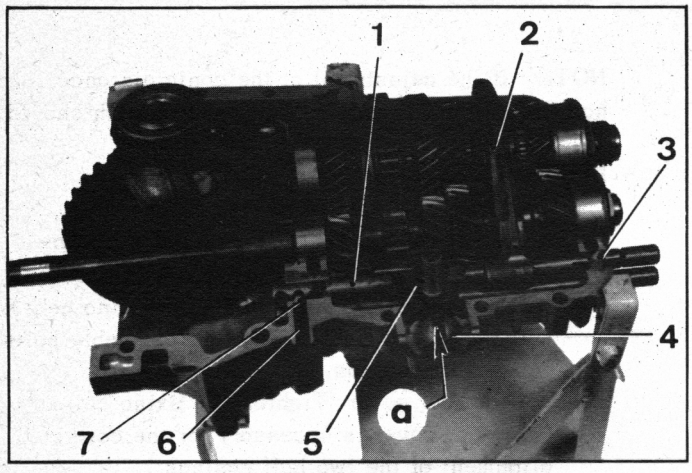

6. Fit the 3rd and 4th gear shaft and fork assembly :

- Lightly oil the shaft (1) and grease its locking notches.
- Check that the 3rd and 4th gear sliding gear is in its neutral position.
- Fit the shaft (1) and fork (2) assembly in the left-hand half casing by engaging the fork (2) in the groove of the sliding gear of the 3rd and 4th gear.
- Grease the ball (7) and spring (6) of the locking mechanism of the 3rd and 4th gear selector fork shaft.
  Fit them.
  NOTE : The five locking balls and three locking springs of the shafts are identical.
- Grease and fit the interlock plunger (3) of the shafts of 1st, 2nd and reverse gear.

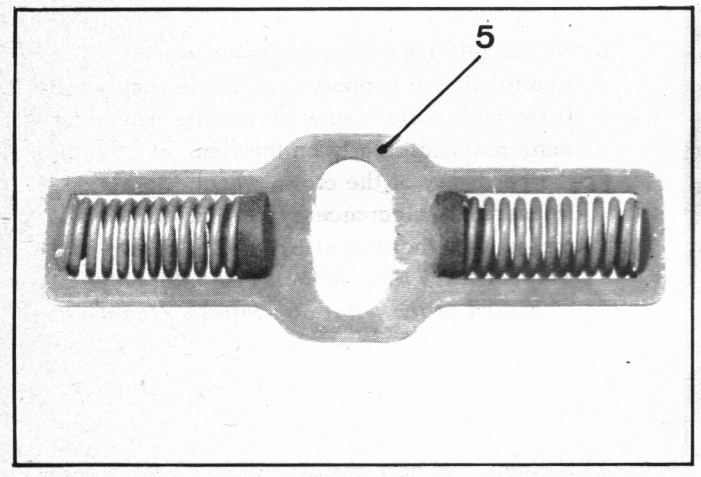

7. Grease and fit spring holder plate (5).
NOTE :
Since January 3, 1972. the reverse gear locking device on the gear lever has been replaced by a mechanism in the gearbox.
The springs of the plate (5) are different : the one with thicker wire should be placed towards the reverse gear intermediate pinion (in the left-hand casing).
Grease the ball joint (4), fit it in the left-hand half casing (*the guide groove « a » placed towards the right-hand half casing*).

8. On the right-hand half casing :
- Stick the lock ball (8) in its housing with grease.
- Stick the spring and guide (9) of the ball joint in their housing with grease.

9. Smear the joint faces of the two half casings with sealing compound.
NOTE :
- Use only CURTYLON sealing compound (made by Societe CEFILAC - France)
- Only smear half the width of the joint face (the outer half) because sealing compound must not enter the casing.

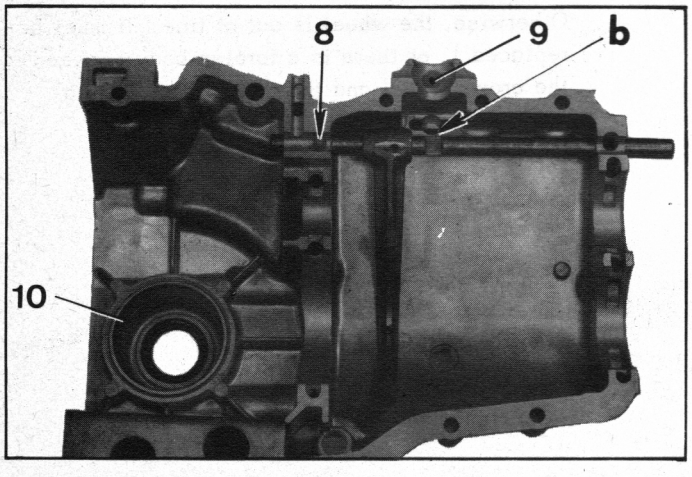

10. Fit the right-hand half casing to the left-hand one :

Before fitting, check that the planet wheels are correctly positioned.

a) Fit the half casing.

b) During this operation, hold in place the outer cage (10) of the differential bearing and engage the 1st and 2nd gear fork in the groove of the corresponding sliding gear. Simultaneously, guide the plate into its housing « b » of the right-hand half casing and make sure that the guide (9) does engage in groove « a » of the ball joint (4).

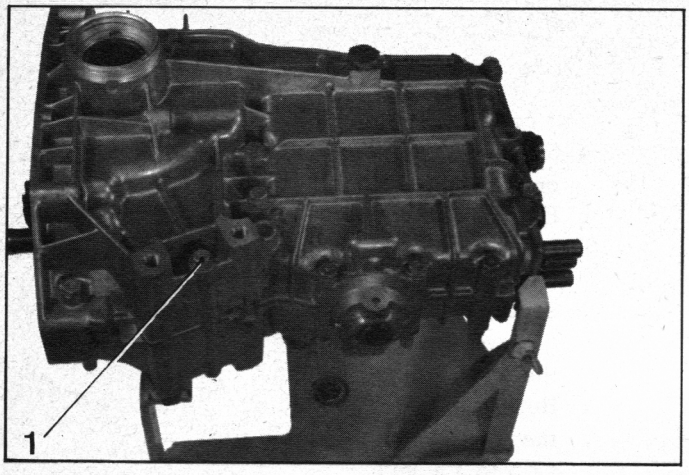

9177

c) Fit the assembly bolts of the half casings (plain washers under the bolt heads and capnuts).

NOTE : The bolt (1) placed between the brake caliper mountings, is the only one with a normal hexagonal nut.

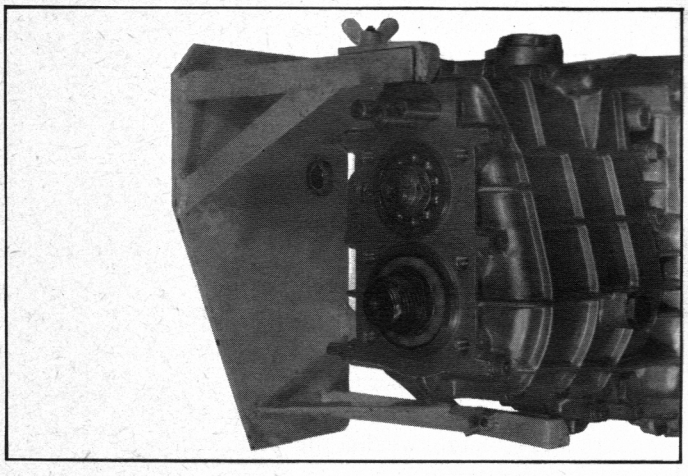

9178

IMPORTANT : Fit the bolts but do not tighten them. Final tightening must be done after the rear cover has been tightened down.

11. Fit the rear cover :

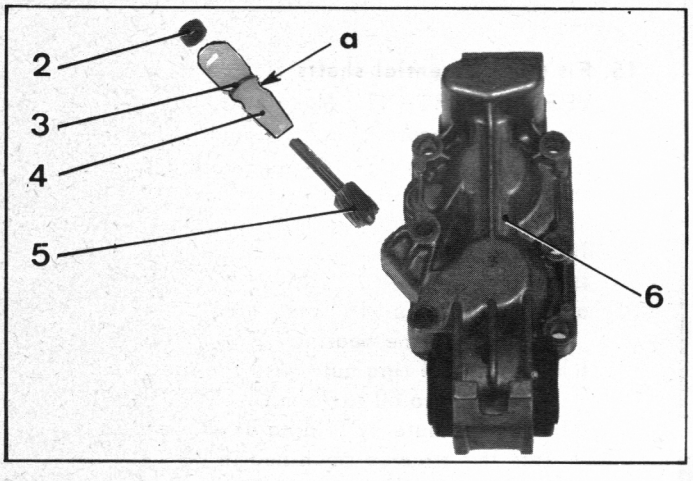

9239

a) Fit the rubber seal (2) and the O-ring (3) on the bearing (4).

Fit the pinion (5) in the bearing (4).

Fit the speedometer drive assembly into the cover (6) and orientate groove « a » to allow for fitting the bolt (7).

b) Smear the joint face of cover with CURTYLON compound.

Fit the rear cover on the gearbox casing.

Fit the fixing bolts, tighten them to 25 to 30 m\N (2.5 to 3 m.kg) (plain washer under bolt head).

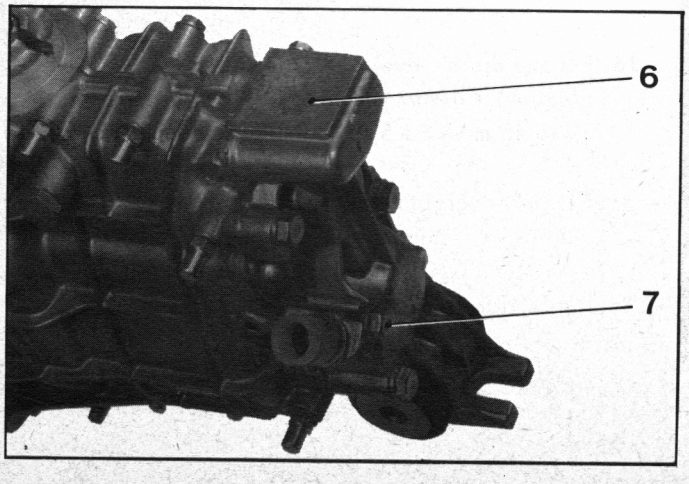

9166

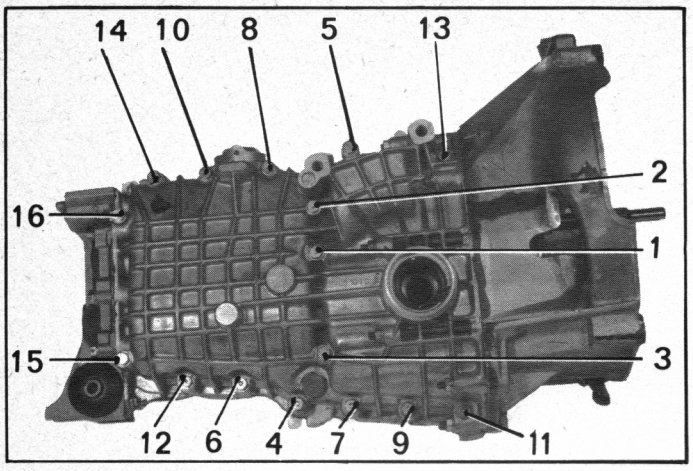

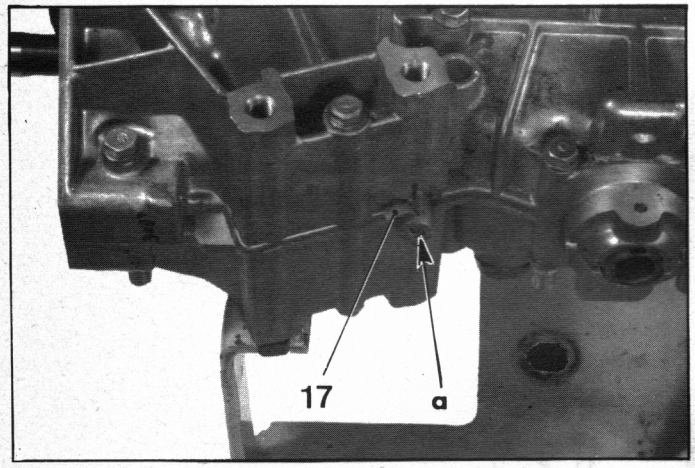

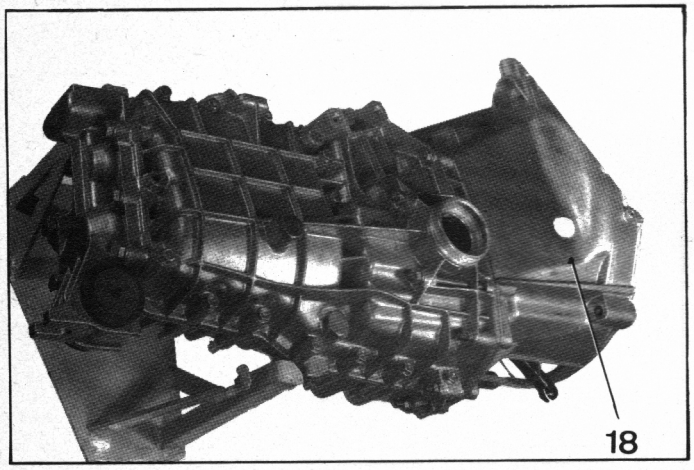

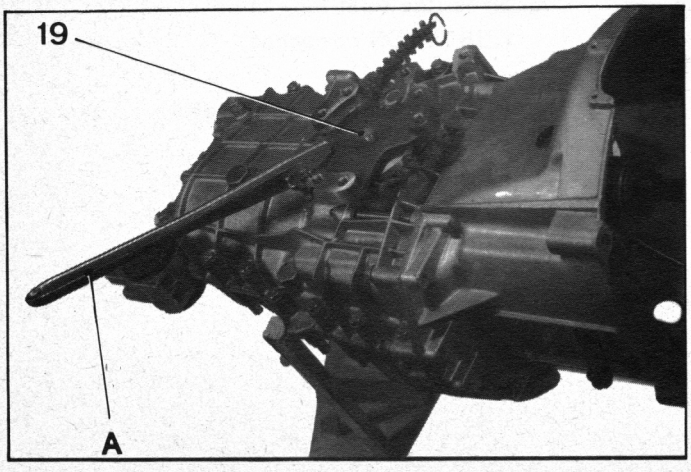

12. Finally tighten the assembly bolts of the half casings :

NOTE : The method for tightening these bolts is most important to ensure oil-tightness of the half casings.

a) Slightly loosen the bolts holding the rear cover on the right-hand half casing.

b) Finally tighten the assembly bolts of the half casings to 14 to 15 mAN (1.4 to 1.5 m.kg)
IMPORTANT : Take care of the tightening sequence shown in the illustration.
(on some gearboxes, the bolt (3) may be on the left-hand half casing),

c) Retighten the bolts holding the rear cover on the right-hand half casing from 25 to 30 mAN (2.5 to 3 m.kg).

13. Fit at « a » the expandible plug for the spring housing and the locking ball of the 3rd and 4th gear fork.
Compress the pellet and the spring (5 mm diameter rod) and fit the pin (17).

14. Fit the assembled clutch casing :

a) Smear the joint faces with CURTYLON compound.
(See note in paragraph 9).

b) Fit the casing (18) and tighten the assembly nuts (plain washer) to 14 to 15 mAN (1.5 to 1.5 m.kg).

15. Fit the differential shafts :

VERY IMPORTANT : Make sure that the planet wheels are securely in place and that, when fitting, the splines of the differential shafts engage in the splines of the planet gears (by turning the differential shafts by hand in the same direction, the differential crown wheel should turn).

a) Fit the shafts (19) (tap lightly with a mallet to position the bearing).

b) Tighten the ring nuts with the aid of a chain wrench A to 60 to 75 mAN (6 to 7.5 m.kg).

c) Lock the nuts by folding down the metal into the grooves machined in the casings.

16. Fit the drain, level and filler plugs (*blanking plug on « Confort » models*). Tighten them to 35 to 45 mAN (3.5 to 4.5 m.kg) (copper seal).

Fit the reversing light switch (*on « Club » vehicles*). Smear the thread of the switch with MASTI-JOINT HD 37. Fit and tighten the switch to 12 to 15 mAN (1.2 to 1.5 m.kg).

Vehicles produced up to September 1, 1972

LONGITUDINAL SECTION

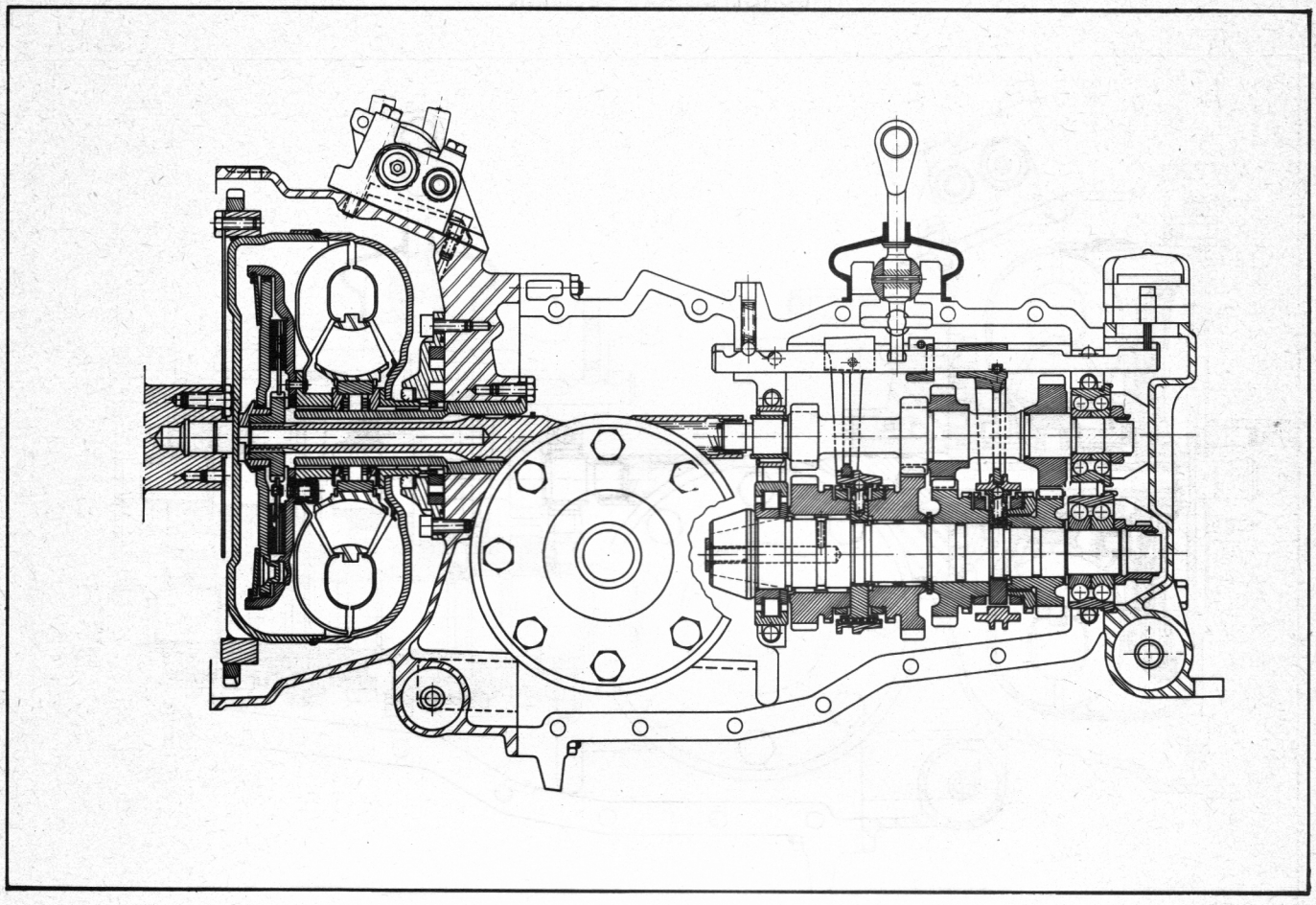

TRANSVERSE SECTION

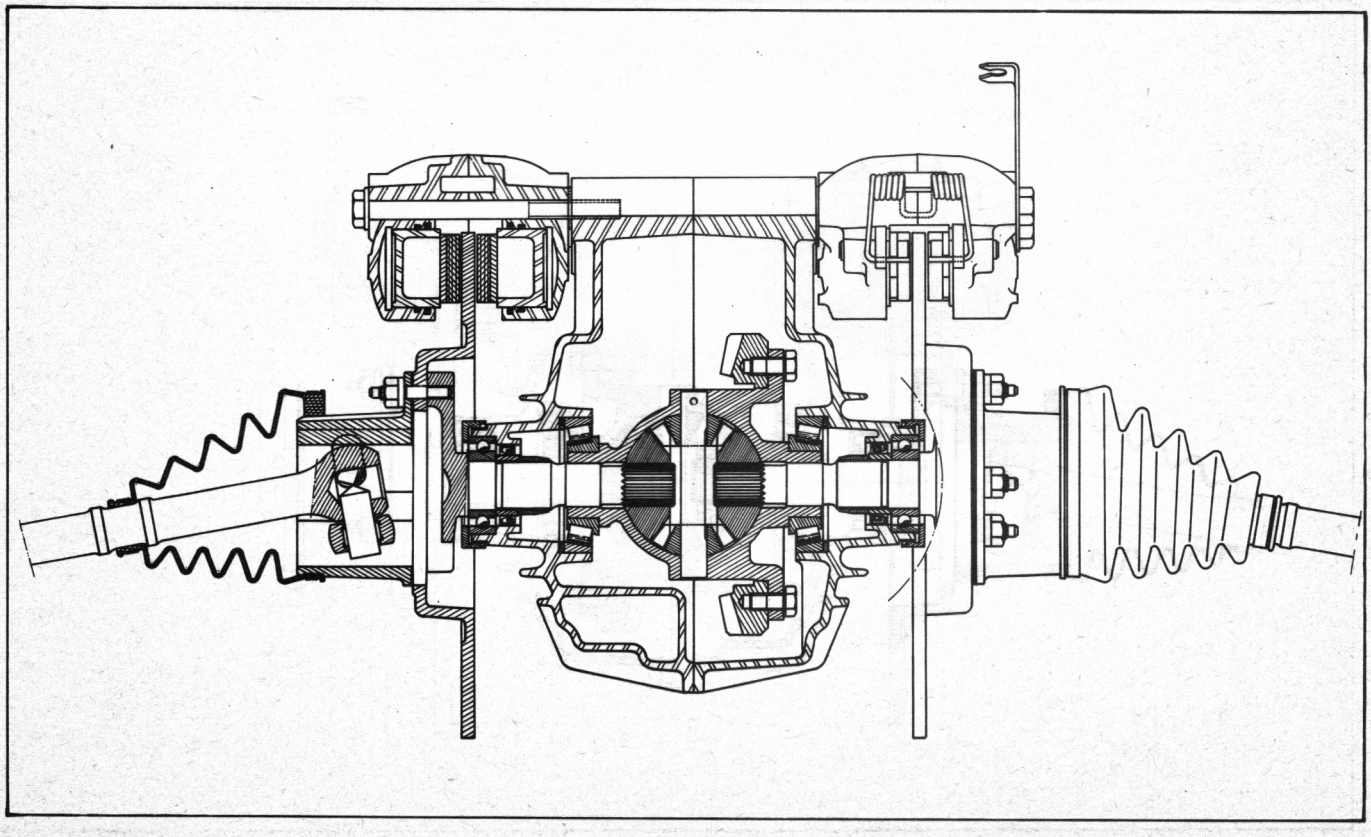

Vehicles produced since September 1, 1972

LONGITUDINAL SECTION

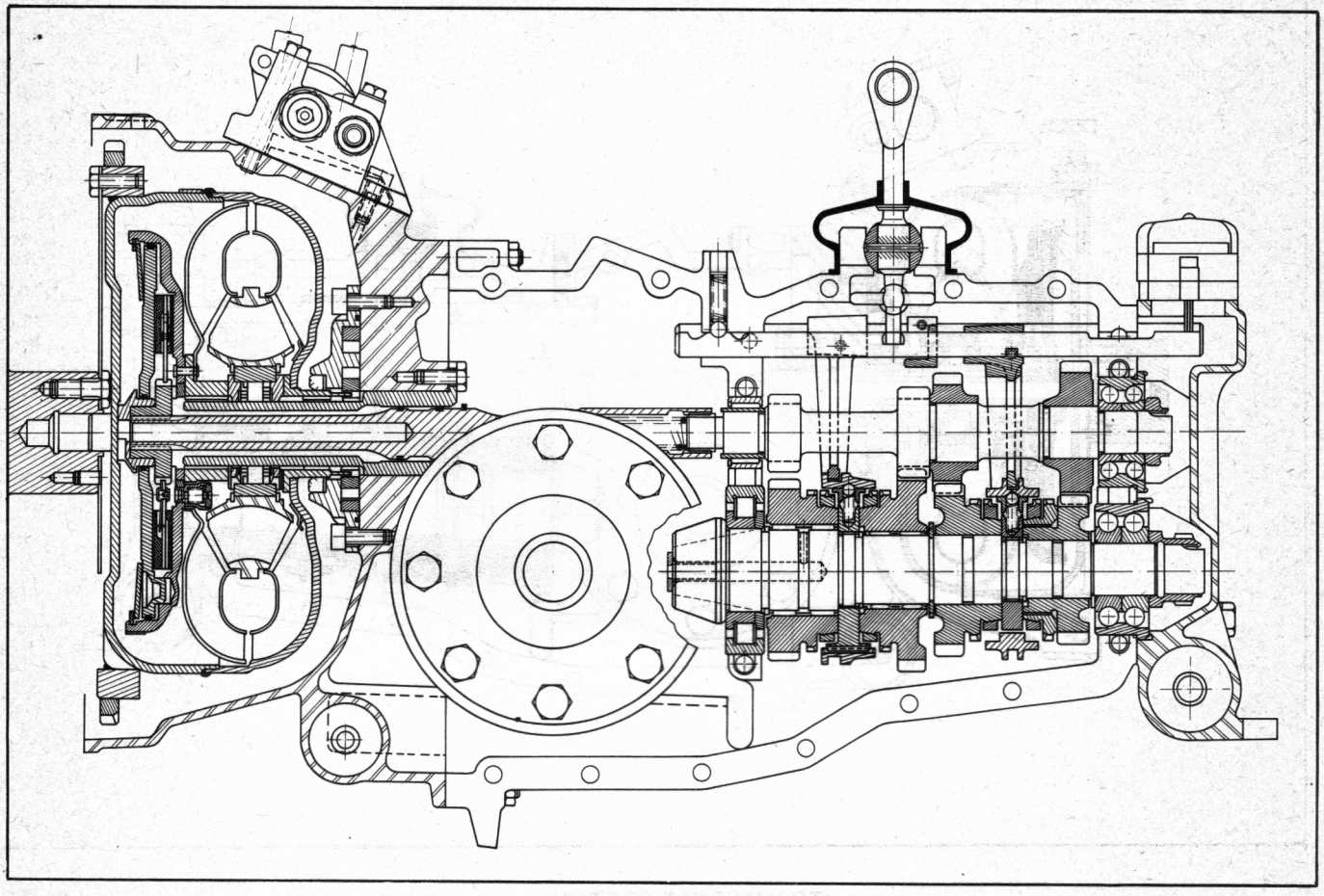

TRANSVERSE SECTION

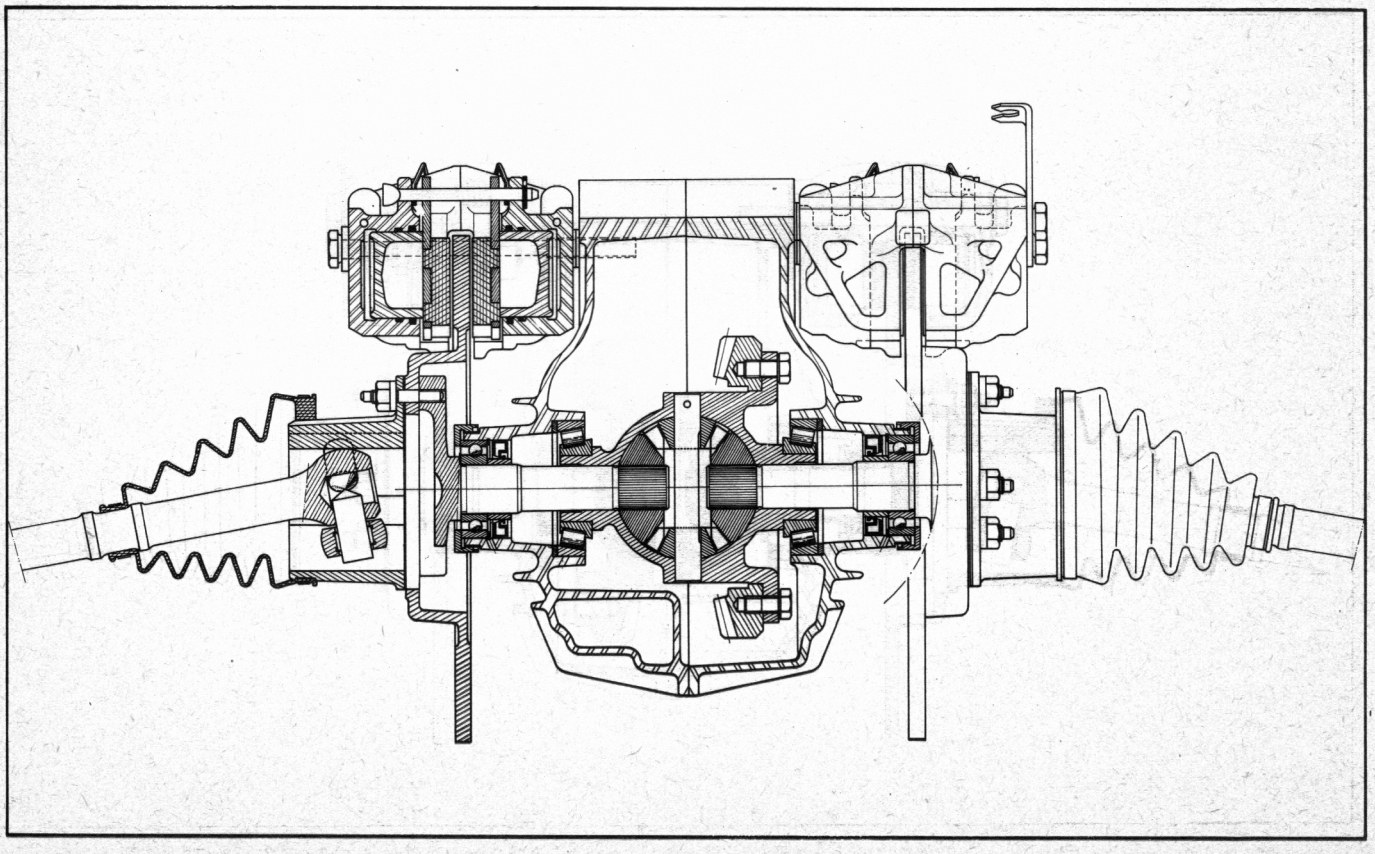

GEAR TRAIN

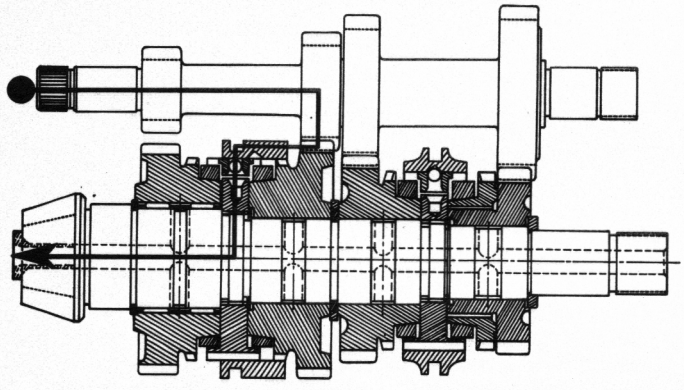

1st GEAR

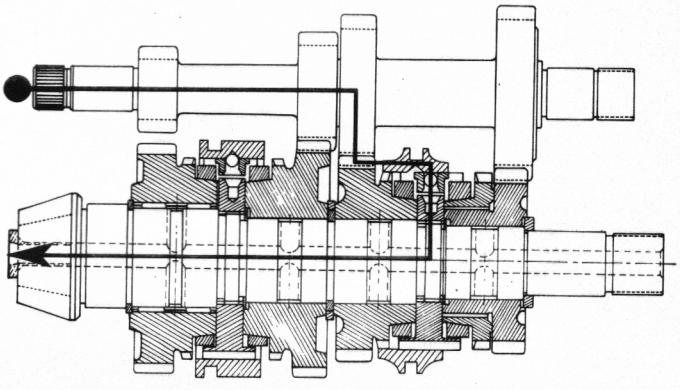

2nd GEAR

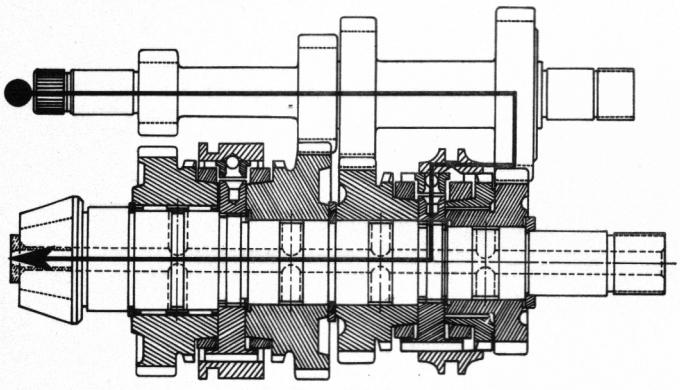

3rd GEAR

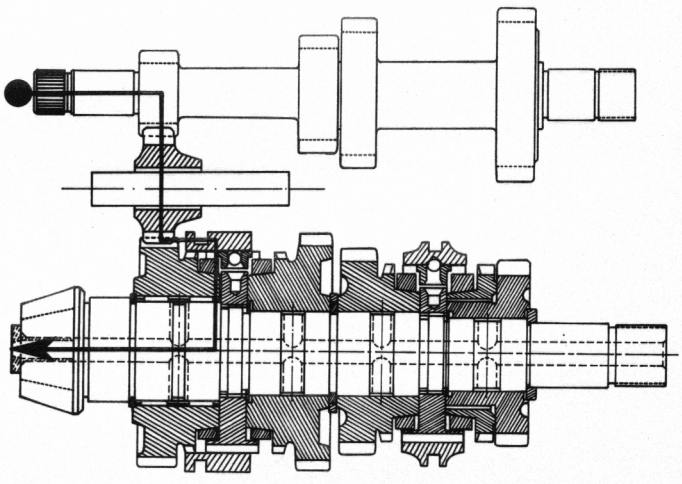

REVERSE GEAR

NOTE : The primary shaft pinions are in constant mesh with the driven gears of 1st, 2nd, 3rd and reverse gear.

SCHEMATIC DIAGRAM OF A TORQUE CONVERTER

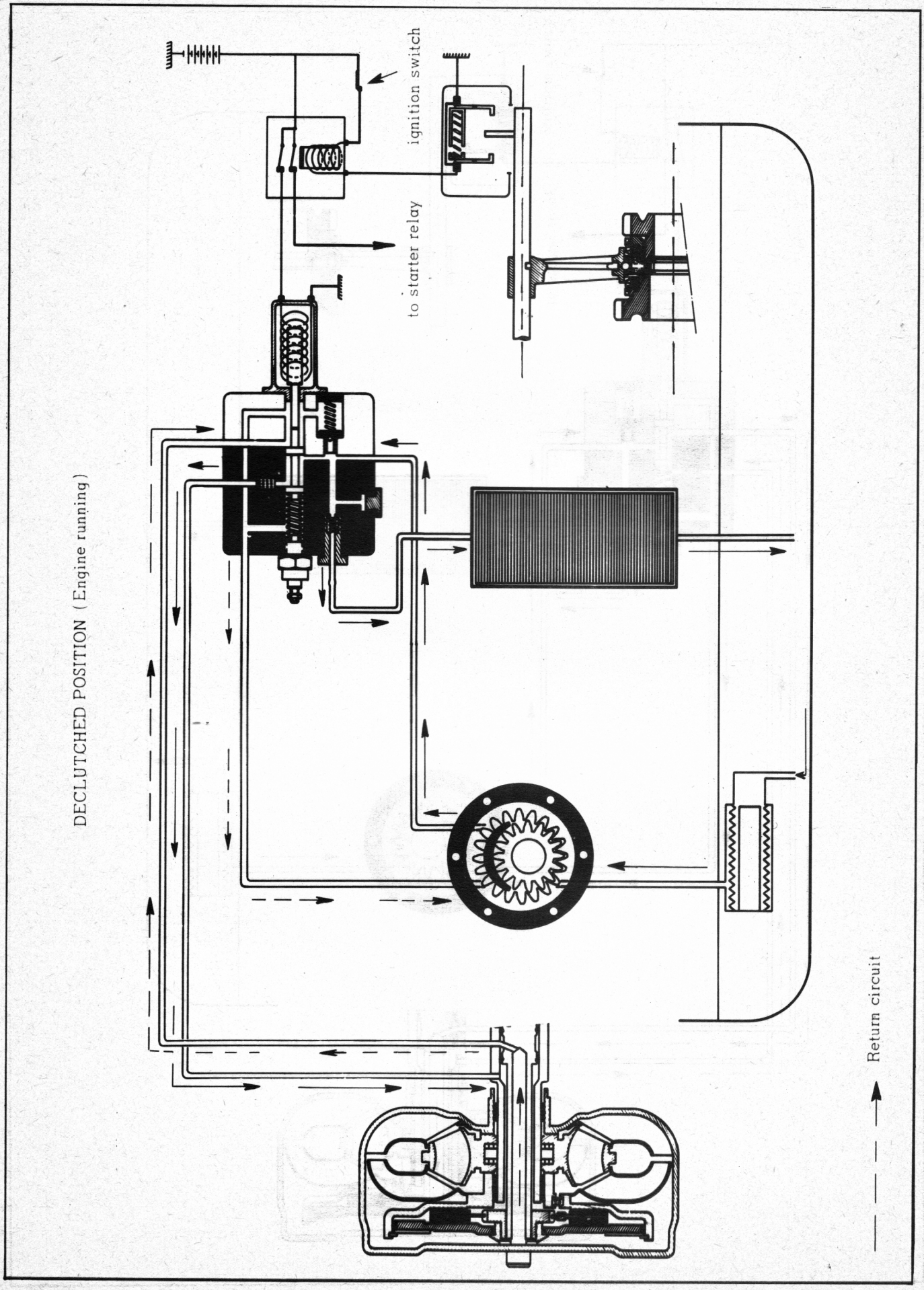

SCHEMATIC DIAGRAM OF A TORQUE CONVERTER

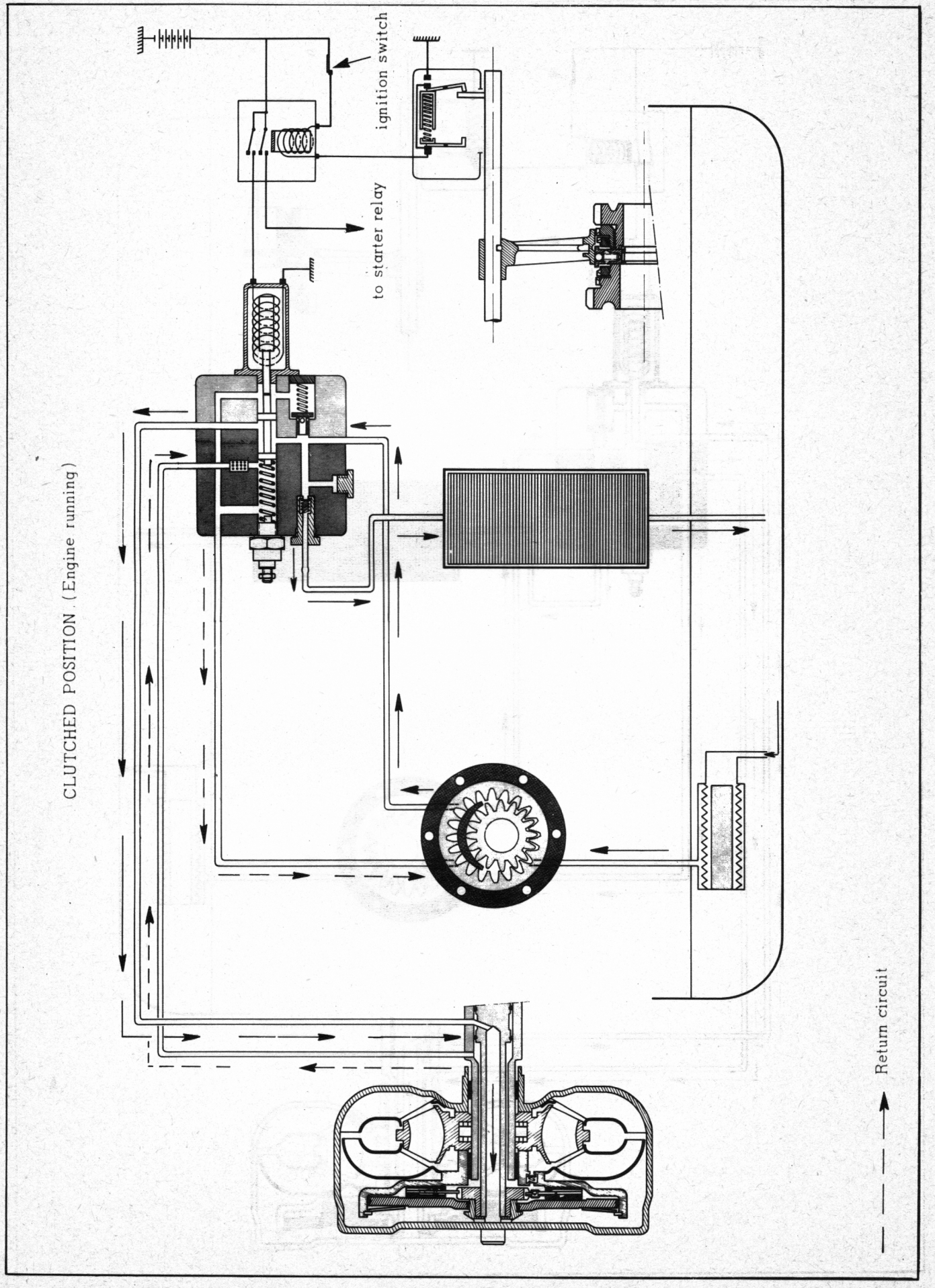

OVERHAULING A THREE-SPEED GEARBOX FITTED WITH A TORQUE CONVERTER

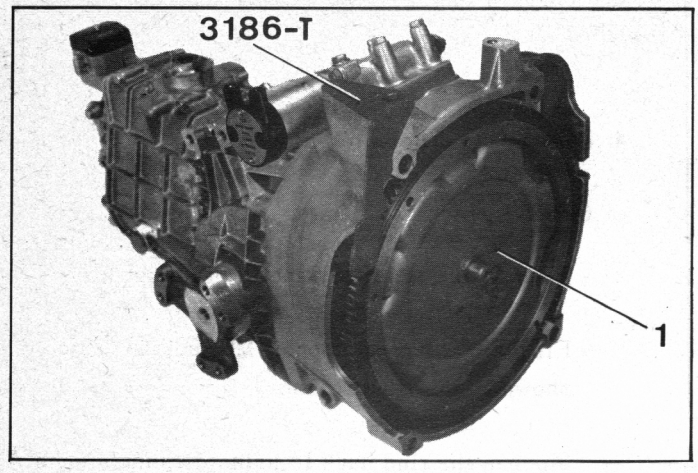

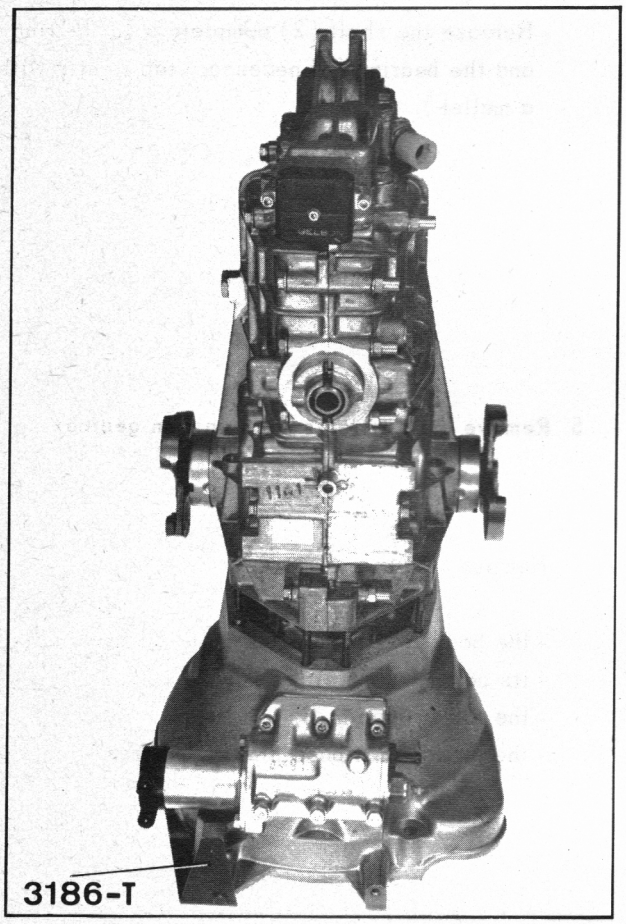

9651

Manual 810-2

I. DISMANTLING

1. Drain the oil from the gearbox.

2. Uncouple the gearbox from the casing and converter assembly :

a) Make sure that there is a 3186-T bracket holding the converter.

b) Place the gearbox on the bench in a vertical position, with the converter resting on the bench.

NOTE : The converter being still full of oil it is advisable to proceed in this manner to prevent oil from flowing out during this operation.

c) Remove the nuts and washers holding the gearbox casing on the converter casing.

d) Remove the control shaft (2). Do not mislay the spring at « a ».

3. Separate the converter casing from the converter

Slide the converter casing assembly towards the edge of the bench and remove the 3186-T bracket.

Vertically free the casing (3) from the converter (1).

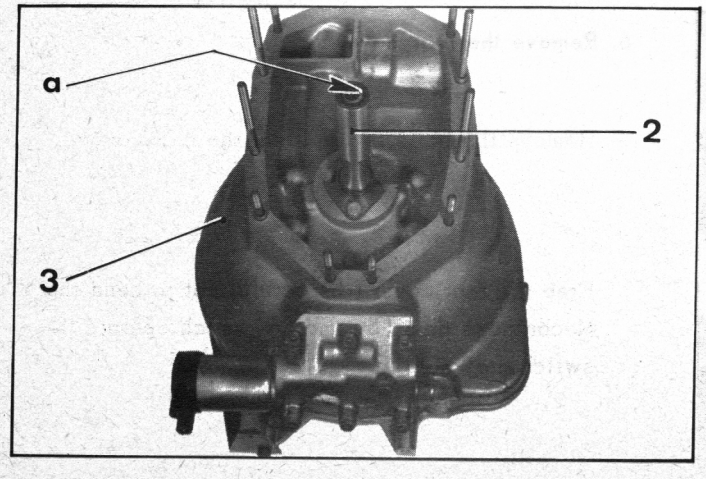

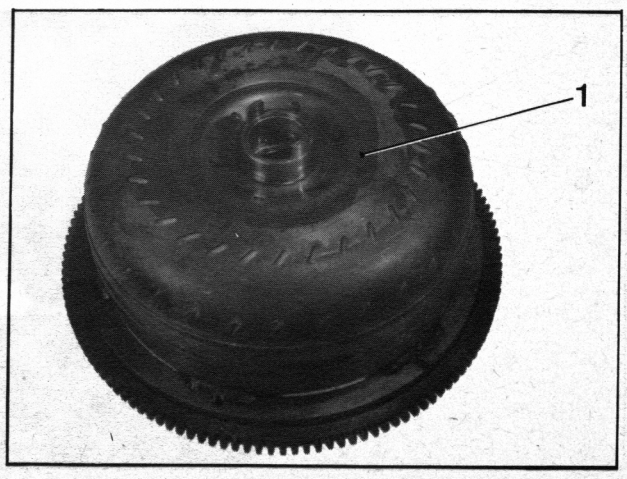

8075

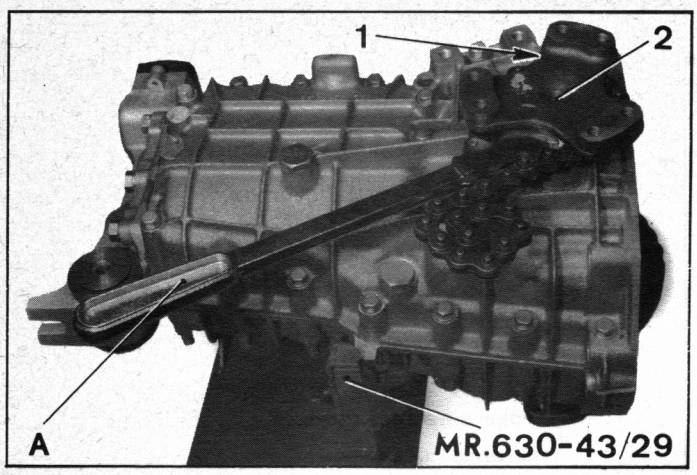

4. Remove the differential shafts :

On each side :

- Bend up the metal locking the ring nut (1).
- Fit the gearbox on support MR. 630-43/ 29 as shown in the illustration.
- Slacken the ring nut (1) using a chain wrench A.
- Release the shaft (2) complete with the ring nut and the bearing (if necessary tap lightly with a mallet).

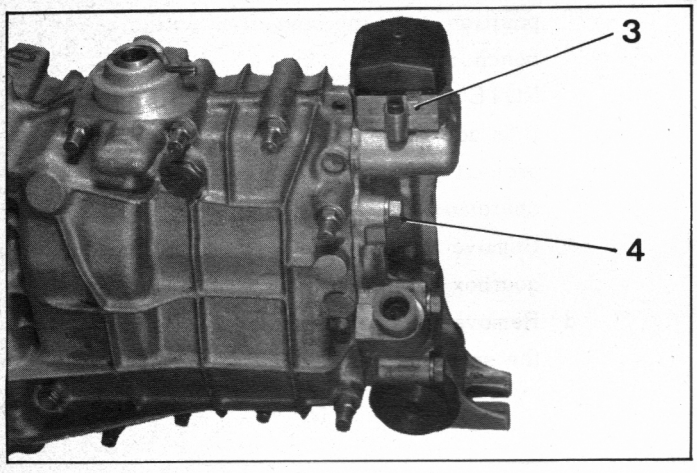

5. Remove the control-switch unit on gearbox :

Remove :

- the body B of the switch unit (3) fitted with its cover (4 mm Allen key),
- the rubber guards C,
- the switch unit base plate D (4 mm Allen key).

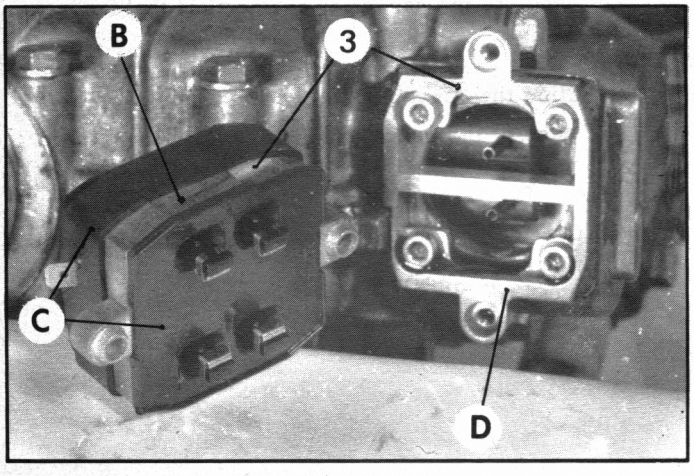

6. Remove the rear cover :

Remove the bolts (4) holding the rear cover.

Free the rear cover (be careful not to bend the Mecanindus pins (5) and (6) which operate the switch unit.

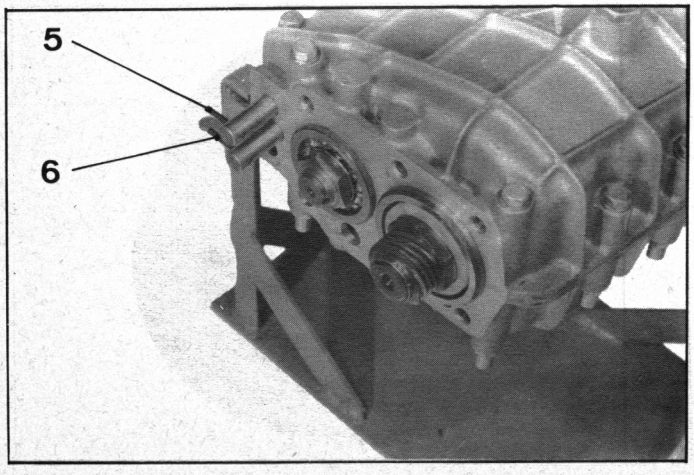

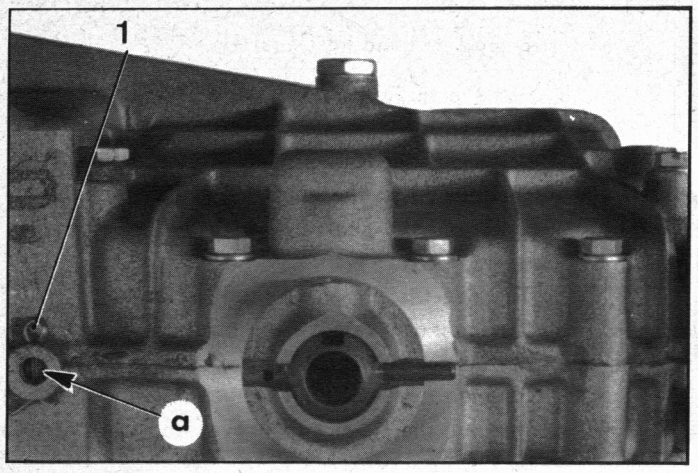

7. Close the orifice « a » of the 2nd and 3rd gear fork shaft locking mechanism with a finger.

Remove the split (1).
Remove the blanking pellet of orifice « a ».

8. **Remove the right-hand half casing of the gearbox :**

Remove the assembly bolts and nuts (3) of the half casings.
Remove the assembly bolts (2) of the central bearing (two bolts towards the right-hand half casing, one bolt towards the left-hand half casing).
Remove the right-hand half casing.

CAUTION : The spring (8) and guide of the ball joint will fall out (retrieve these two parts).

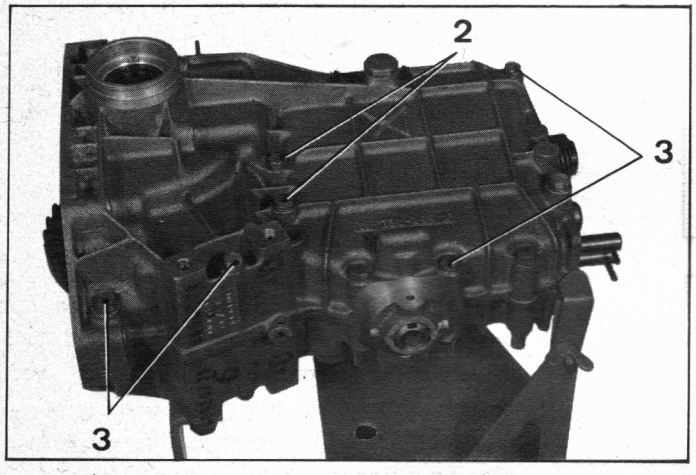

9. Remove :

- the ball joint (9),
- the small plate (7) holding the return spring,
- the spring (10) and locking ball (11).

10. **Remove the gears from the gearbox :**

Remove :

- the primary shaft (6),
- the bevel pinion assembly (5),
- the differential (4).

Remove the outer cages of the bearings in the half casings. *Mark them with the corresponding bearings of the differential.*

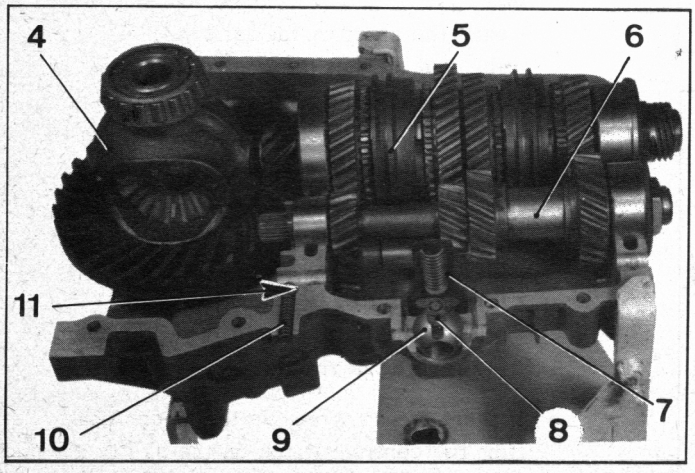

NOTE : If the gearbox is being dismantled for a overhaul without exchange of :

- the gearbox casing,
- the crown wheel and pinion,
- the differential bearings,
- the differential casing.

mark the position of the shims (left-hand or right-hand) to avoid having to reset the conic distance.

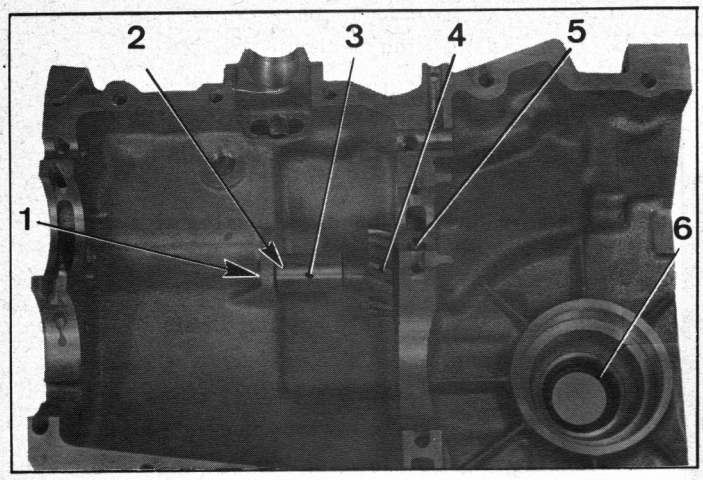

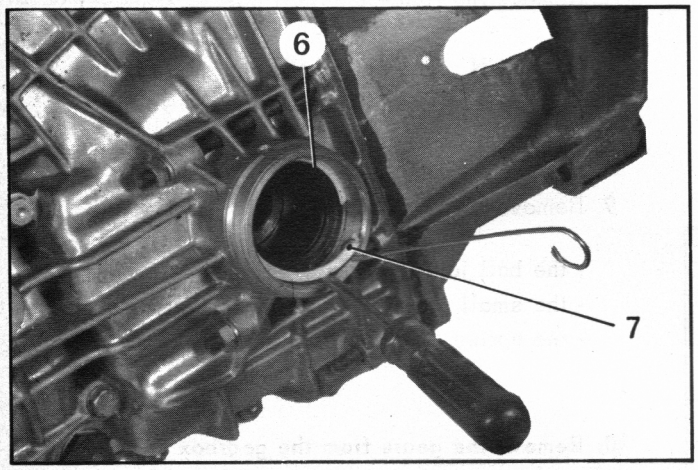

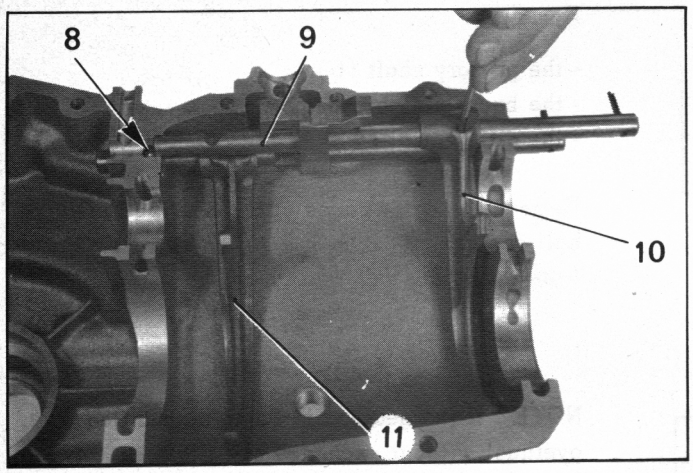

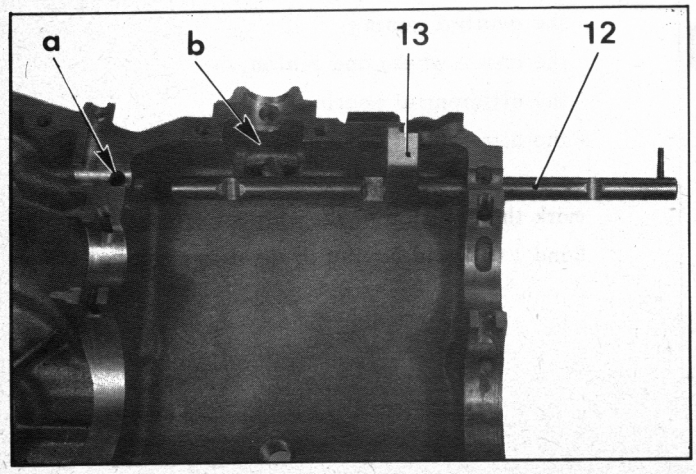

II. STRIPPING THE ASSEMBLIES

1. Strip the left-hand half casing :

a) Remove the cylindrical pin (5) locking the shaft (1).
Drive out the Mecanindus pin (2) holding the spacer (3) on the shaft (4 mm pin punch).
Drive out the shaft (1) with the aid of a bronze drift.
Remove the pinion (4) and the spacer (3).

b) If necessary, remove the circlip (7) from the output bearing.
Remove the seal (6).

c) Remove the filler cap (reversing light switch *on « Club » vehicles*).

2. Strip the right-hand half casing :

a) Remove the drain and level plugs.

b) Remove the fork (10) of the 2nd and 3rd gear.
To do so :
- shift the shaft (9) and fork (10) assembly as far as possible towards the rear,
- drive out the Mecanindus pin holding the fork on the shaft (4 mm pin punch),
- free the shaft from the rear,
- remove the fork (10),
- remove the locking ball (8).

c) Remove the fork (11) of reverse gear and 1st gear. To do so :
- shift the fork (11) and shaft (12) as far as possible towards the front (differential end).
- drive out the Mecanindus pin holding the fork on the shaft (4 mm pin punch).
- move the shaft (12) towards the rear by placing a finger on orifice « a » to avoid losing the locking ball.
- remove this ball and its spring.
- remove the fork (11).

d) Remove the intermediate control lug (13) which operates the reverse gear shaft. To do this :
- shift the shaft as far as possible towards the rear so that the control lug comes to rest against the rear wall of the casing.
- drive out the Mecanindus pin holding the control lug on the shaft. Completely release the Mecanindus pin by shifting the lug (13) towards the front and by swinging it into the recess « b ».
- free the shaft (12) from the rear.
- remove the intermediate lug (13) operating the reverse gear shaft.

e) If there are any, remove the Mecanindus pins from the control switch on the shafts (9) and (12) (2 mm pin punch).

8281

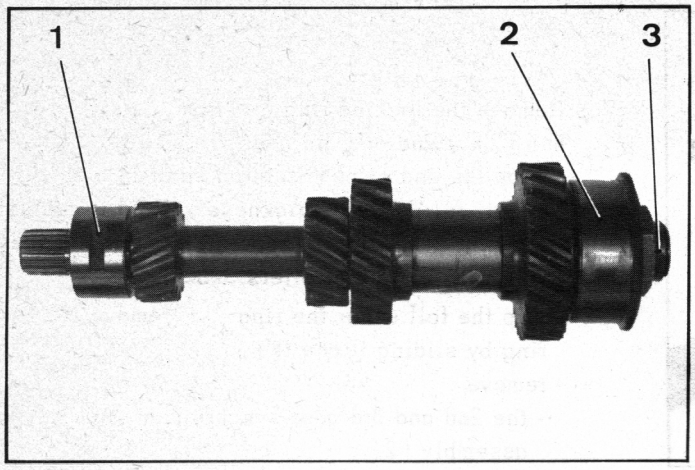

3. Strip the primary shaft :

a) Remove the needle bearing (1).

NOTE : The inner cage (4) is not interchangeable.

b) Fit the shaft in a vice equipped with jaws.
Remove :
- the nut (3) (locked with tab-washer) (29 mm spanner),
- the bearing (2).

8264

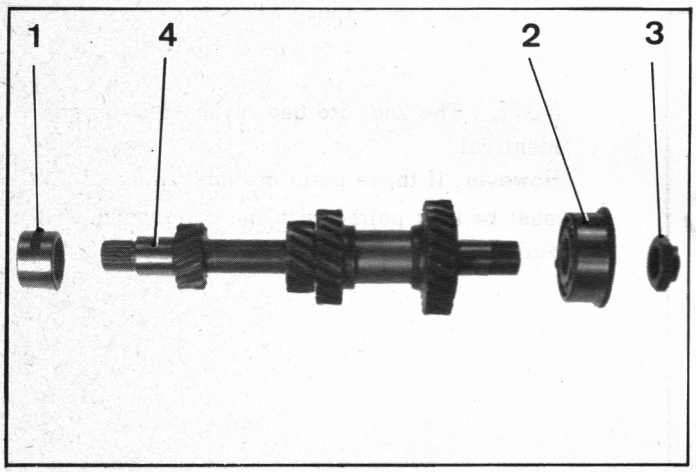

4. Strip the bevel pinion shaft :

IMPORTANT : *Since the bearing surfaces of the pinions of 2nd and 3rd gear on the shaft have been given a special treatment, all traces of scratches or damage risk causing a « seizure » of the operating parts. If these parts are to be reused, take all the necessary precautions during disassembly.*

a) Fit the bevel pinion assembly in a vice equipped with jaws, gripping either the reverse gear loose pinion or the first gear loose pinion.
Lock the bevel pinion rigidly with the pinion gripped in the vice by shifting the relevant slider in the appropriate direction.

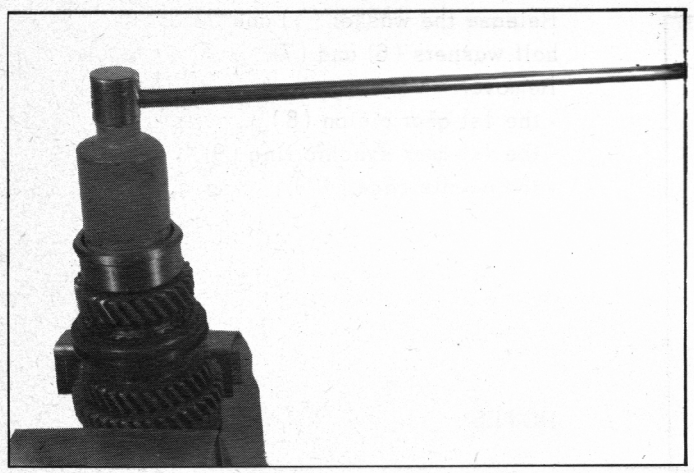

8270

b) Remove :
- the hex.-head bolt (5) (locked with tab washer) (36 mm spanner)
- the bearing (6),
- the adjusting washer (7) for the conic distance
- the 3rd gear loose pinion (8),
- the 3rd gear synchro ring (9).

NOTE : If the gearbox is being overhauled without changing :
- the gearbox casing,
- the bevel pinion,
- the bearing (6)

retain the adjusting washer (7) to avoid having to reset the conic distance.

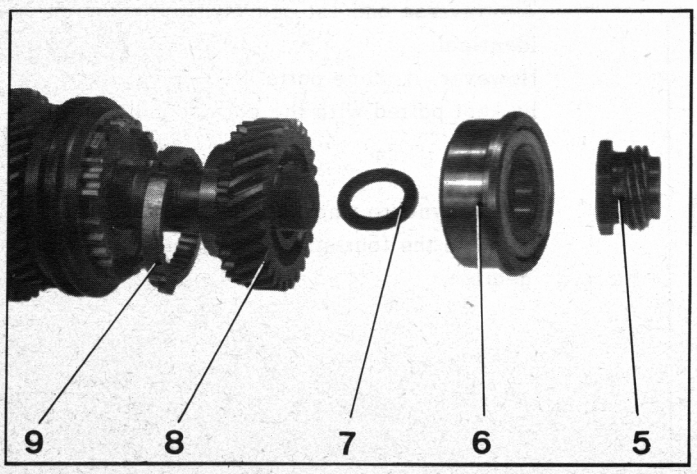

7292

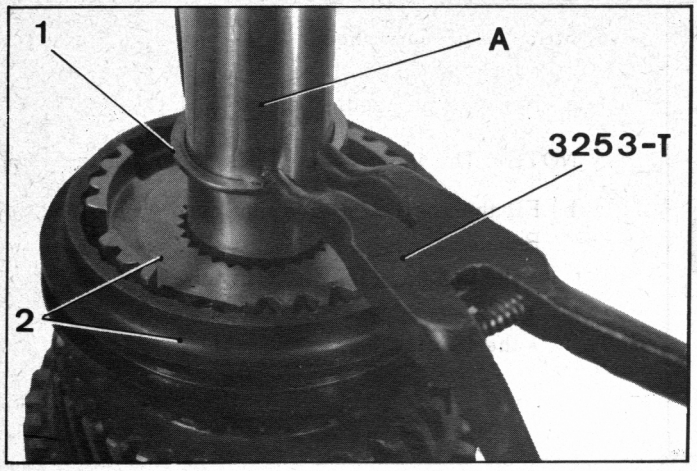

c) Remove the locking ring (1) from the synchro hub (2) of 2nd and 3rd gear. To do so :
- wrap the end of bevel pinion shaft in a sheet of foil A (0.10 mm thickness). Hold it against the ring (1). Slightly separate the ends of the ring with the aid of pliers 3252-T.
- slip the foil under the ring (1), remove the ring by sliding it one the foil.
- remove :
  - the 2nd and 3rd gear synchro,hub-slider assembly (2),
  - the 2nd gear synchro ring (3),
  - the 2nd gear slider (4).

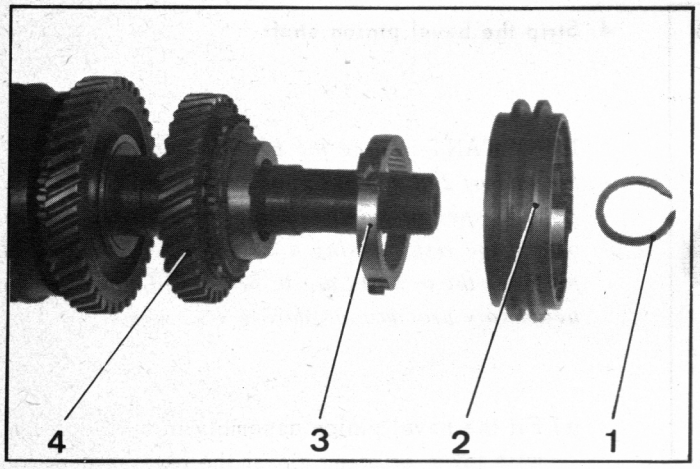

NOTE : The 2nd/3rd gear synchro rings are identical.
However, if these parts are not replaced, they must be kept paired with the corresponding pinions.

d) Remove the 1st gear loose pinion.
Release the washer (5) and remove the two half washers (6) and (7).
Remove :
- the 1st gear pinion (8),
- the 1st gear synchro ring (9),
- the needle cage (10).

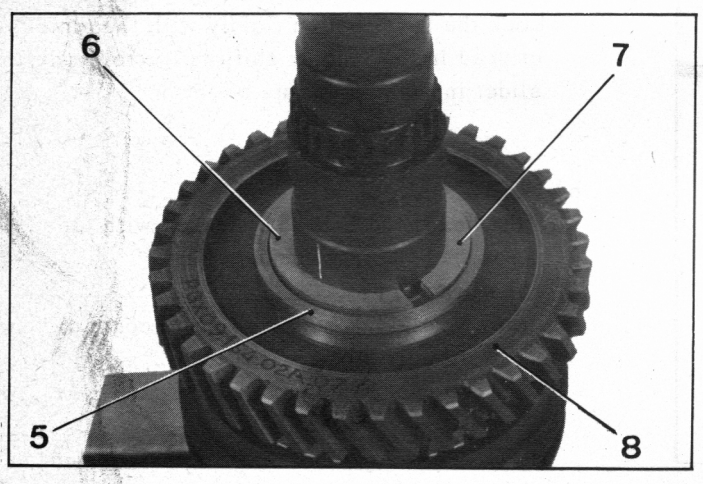

NOTES :

- The reverse and 1st gear synchro rings are identical.
  However, if these parts are reused, they must be kept paired with the corresponding pinions.

- These synchro rings are different from those fitted to the four-speed mechanical clutch gearbox.

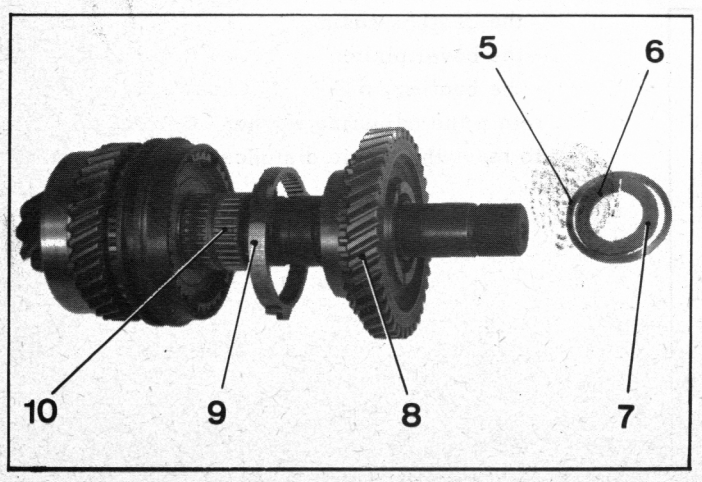

8267

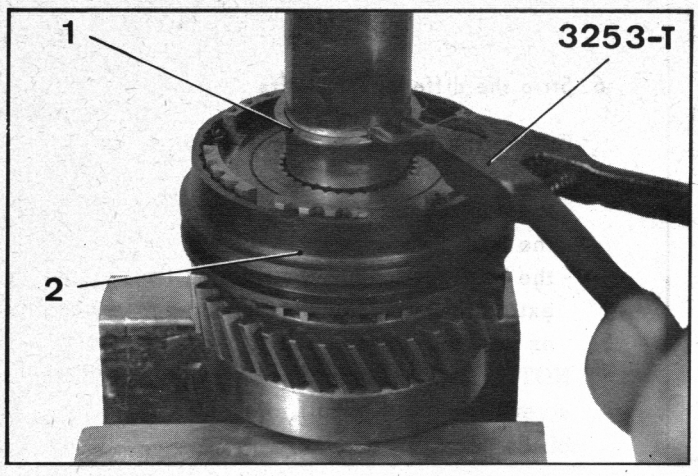

8241

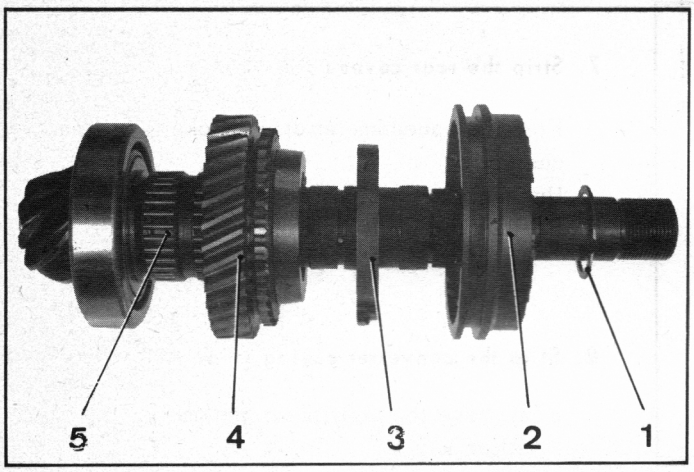

Manual 810-2

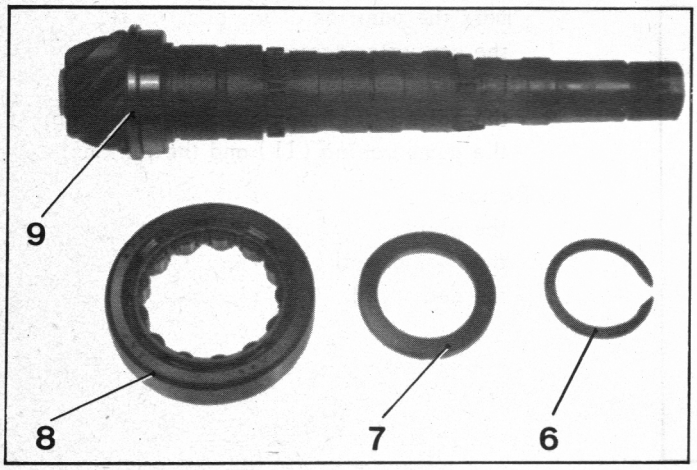

7300

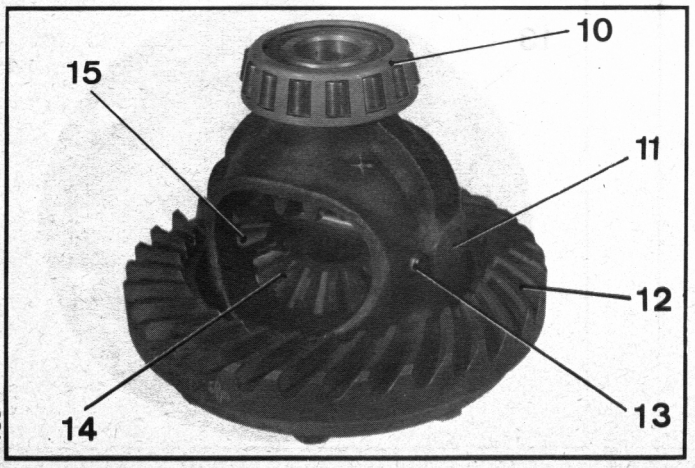

7386

e) Remove the locking ring (1) from the reverse and 1st gear synchro hub; proceed in the same manner as for the removal of the locking ring of the 2nd/ 3rd synchro hub (paragraph c).
Remove :
- the reverse-1st gear synchro hub and sliding gear assembly (2),
- the reverse gear synchro ring (3),
- the reverse gear loose pinion (4),
- the needle cage (5).

f) If necessary, remove the front bearing of the bevel pinion.
To do so :
Remove :
- the locking ring (6) (take the same precautions as for the removal of the locking rings from the synchro hubs (see paragraph c),
- the thrust washer (7),
- the bearing (8),
- the inner cage (9) of bearing (8),
Using a press and a tube 50 mm in diameter and 60 mm length.

NOTE : The bevel pinion of the converter gearboxes do not have retarding dowels.

5. Dismantle the differential :

Remove the pin (13) and drive out the shaft (11).
Remove the two satellite gears (15) and then the two planetary gears (14).
Remove the crownwheel (12).
Remove the bevel bearings (10) (use universal extractor 2400-T and pad 3184-T.H).

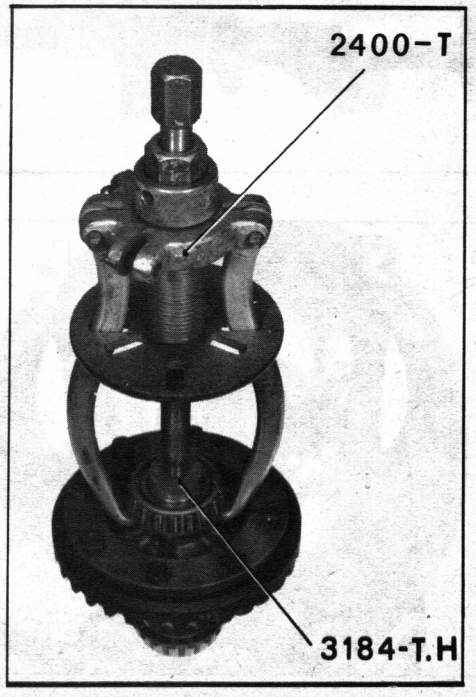

9463

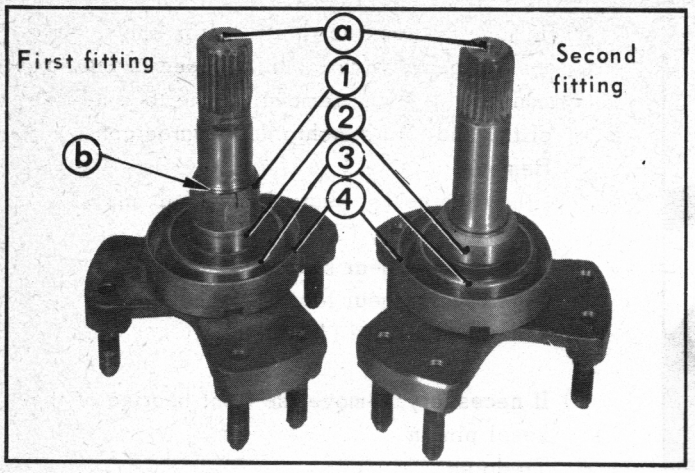

11244

6. Strip the differential shafts :

Grease the visible portion « b » of the thread.
Remove :
- the nut (1) (if fitted),
- the bush (2),
- the bearing (3) and the ring-nut (4) (using an extractor bearing under the ring-nut (4) as close as possible to the shaft).

NOTE : The extractor used should have a central screw fitted with a ball to avoid damage to end « a » of the shaft.

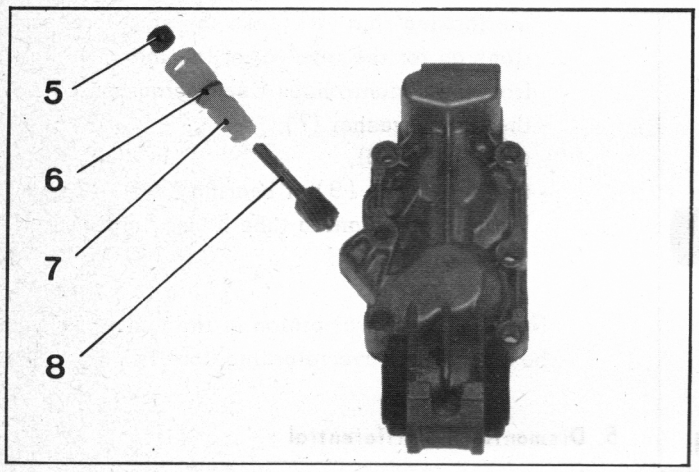

9239

7. Strip the rear cover :

Free the speedometer drive socket (7) from the casing.
Uncouple the pinion (8) from the socket.
Remove the seals (5) and (6).

8. Strip the converter casing :

a) Remove the distributor assembly (9) (6 mm Allen key).

b) Remove the oil pump. To do this :
- mark the position of the pump in relation to the converter casing.

Remove :
- the bolts (10) holding the pump casing,
- the pump casing (11) and the pinions.

c) Remove :
- the pinions (13) and (14),
- the O-ring seal (15),
- the seal (12).

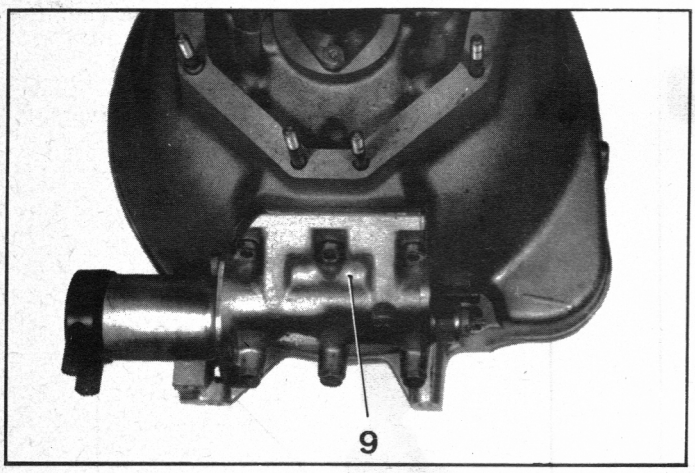

9645

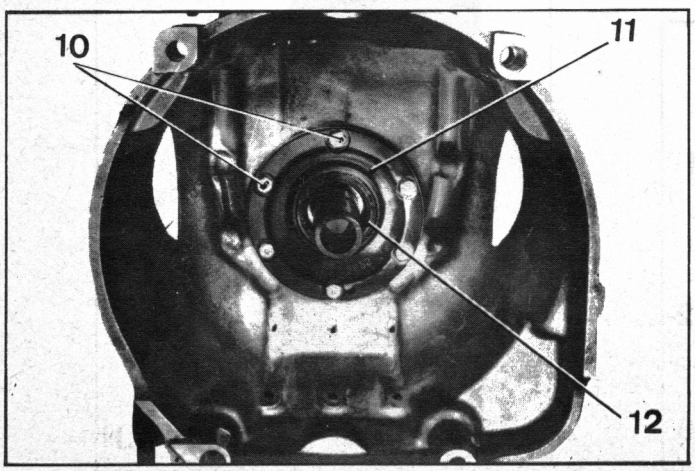

8077

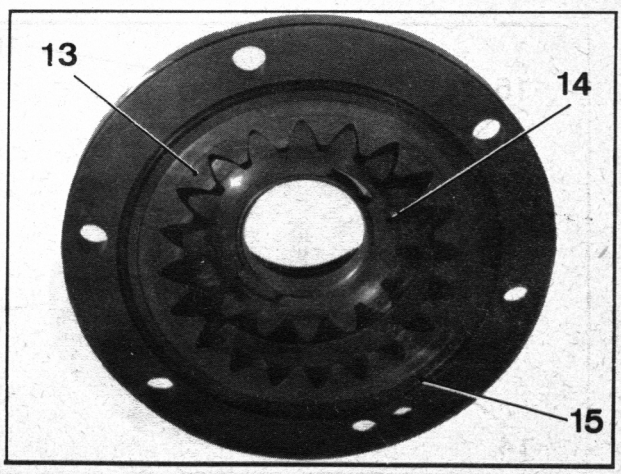

8090

8273

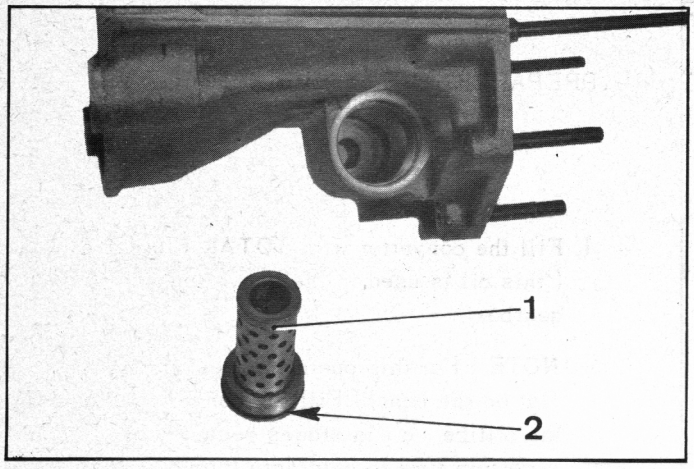

d) Remove the oil strainer (1) and free the O-ring seal (2).

e) Remove the studs (3) (stud extractor 2410-T).
IMPORTANT : Never remove the stator sleeve(4) This part is not sold separately and can only be fitted in a repair workshop.

9. Drain the converter :

Turn the converter upside down over a vessel and allow to drain for several hours.

10. Remove the starter gear-ring (if necessary) :
To do so :

a) Turn the converter (5) the right way up so that the flange « a » rests on two planks at least 120 mm thick.
Drive out the starter ring with the aid of a caulking chisel while turning the converter on planks in order to never strike an overhanging blow on the starter gear-ring.

b) Fit the new starter gear-ring :
Turn the converter upside down and rest it on the planks.
Carefully clean the flange « a » at the location of the starter ring.
Heat the new starter ring using a blow-torch fitted with an 800 to 1000-litre jet.
Direct the flame towards the inside bore of the starter ring while continually rotating it so that expansion takes place uniformly.
Stop heating when the starter ring temperature reaches 200° C (pale straw colour).
Offer up the starter ring on the flange *the teeth entry towards the gearbox.* Perform this operation rapidly. Using a bronze drift if necessary.

8081

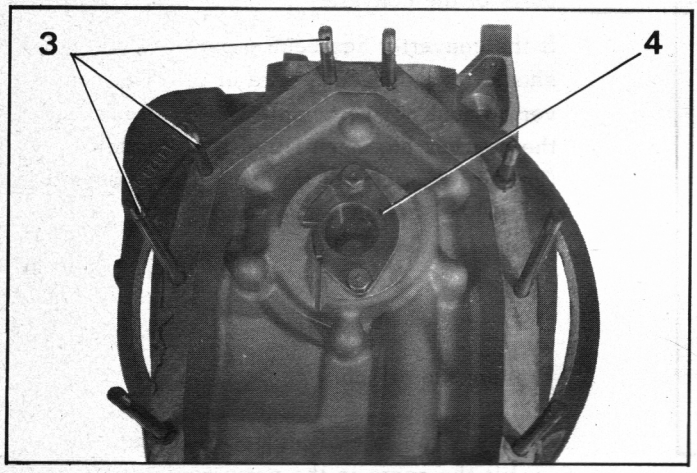

Manual 810-2

8080

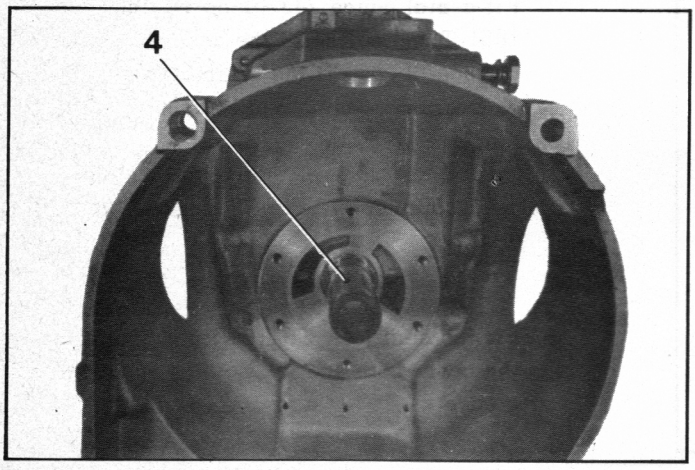

11. Clean the parts :

NOTES :

- The bearing surfaces for the different pinions on the bevel pinion shaft should be free from defects. These surfaces must not be given any treatment whatsoever.
- Blow through the oil passages in the casing with compressed air.
- Complete the cleaning of the joint faces with alcohol.

8075

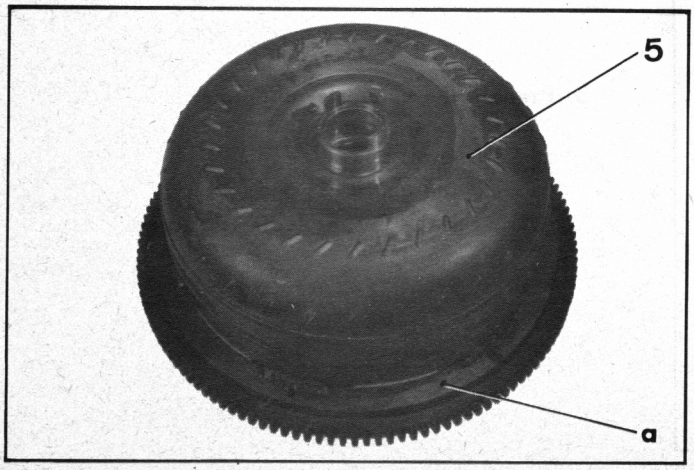

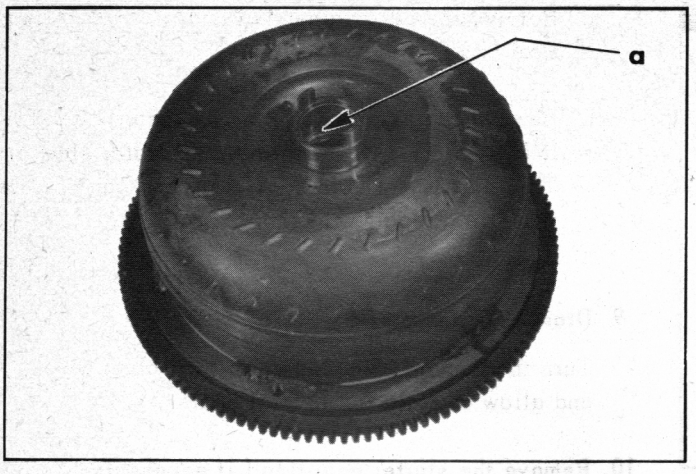

8075

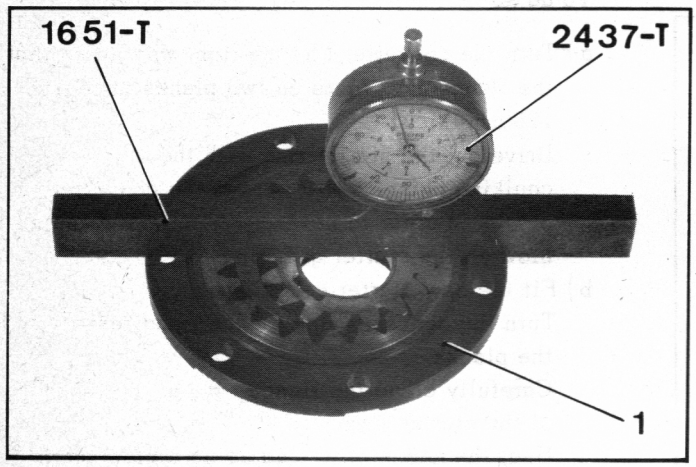

9484

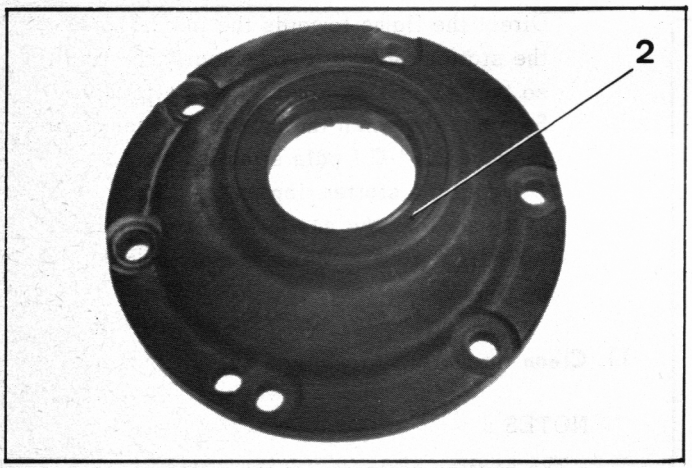

8091

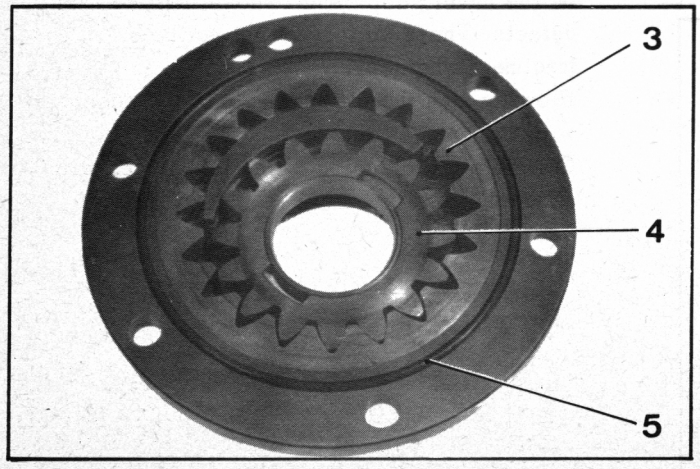

8090

III. PREPARING THE ASSEMBLIES.

1. Fill the converter with **TOTAL Fluid T oil** (this oil is used in the converter and the gearbox).

NOTE : For this operation, rest the converter flat on the bench. Fill the converter through the orifice « a » in stages because the oil takes a certain time to percolate through the various parts of the converter.

If the converter has been properly drained, it should take about 1.5 litre of oil. The converter must not be completely filled until after the gearbox has been fitted to the vehicle. (True oil capacity of the converter about 2.3 litres).

2. **Prepare the oil pump :**

a) Check the lateral play of the gears : Fit the gears in the pump casing (1). Fit a dial gauge 2437-T on straight edge 1651-T and calibrate the assembly on a surface plate. Fit the calibrated assembly on the pump casing and measure the clearance between the bearing face of the casing and each of the gears (3) and (4). *This clearance must be between 0.03 and 0.06 mm.*

b) Fit the seal (2). To facilitate fitting, smear the cover bore and the seal periphery with grease.

3. **Prepare the converter casing :**

a) Fit the oil pump :
- Oil the gears (3) and (4).
- Stick the O-ring seal in its groove using grease.

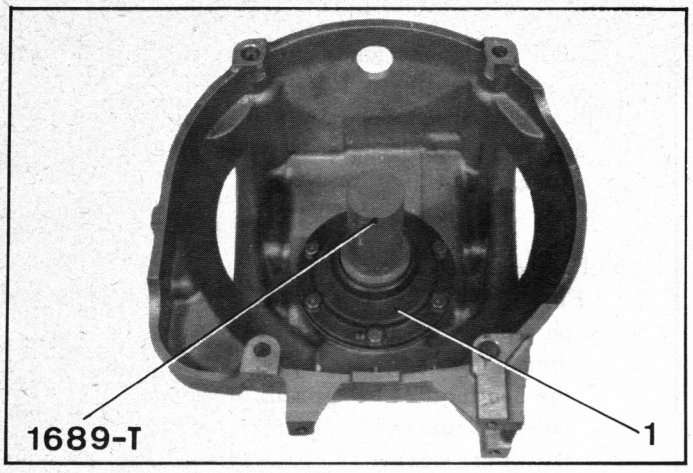

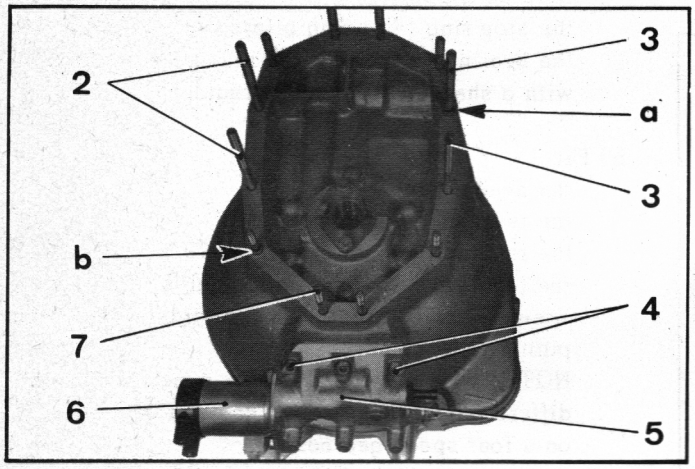

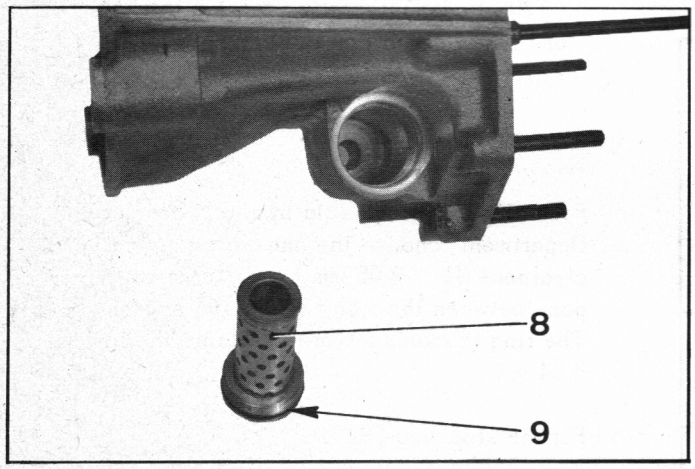

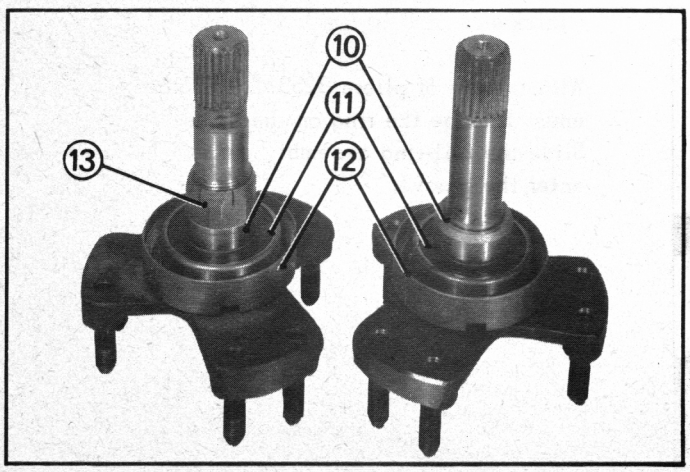

- Fit the oil pump (1) in the converter casing.
- *Centre the pump with the aid of mandrel 1689-T.*
- Fit and tighten the bolts holding the pump to 19 mΛN (1.9 m.kg) (no washer under the head of the bolt).

b) Fit the distributor :

Smear the distributor joint face (5) with CURTYLON sealing compound.

Fit the distributor on the converter casing, the electromagnet (6) towards the right of the casing.

Fit and tighten the bolts (4) to 12 to 17 mΛN (1.2 to 1.7 m.kg).

c) Fit the assembly studs (stud inserter 2410-T).

There are three different lengths of stud.

Fit them in the following way :

- at (2) and (3) : the four longest studs,
- at (7) : the medium length stud,
- in the other positions : the shortest studs.

NOTE : Make sure that there are two centring bushes in « a » and « b ».

d) Fit the oil strainer :

Fit the O-ring (9) on the strainer (8).

Screw the strainer into its housing on the converter casing, tighten it to 10 to 15 mΛN (1 to 1.5 m.kg).

4. Prepare the differential shafts :

Fit on each shaft :

- the ring - nut (12),
- the bearing (11) (fit in a press using a tube with inside diameter 26 mm, outside diameter 34 mm, and length 120 mm)
- the bush (10).

NOTE : This bush should not show any trace of scratches or damage. Otherwise, replace it.

Fit and tighten the nut (13) to 140 to 160 mΛN (14 to 15 m.kg) (if fitted).

5. Prepare the bevel pinion assembly :

IMPORTANT : *The bearing surfaces for the 2nd and 3rd idling gears on the bevel pinion shaft have been given a special surfacing treatment, therefore any trace of scratches or damage risks causing « seizure » of the operating parts.*
It is, therefore, necessary to take the necessary precautions when fitting these parts.
Lubricate all the parts before fitting.

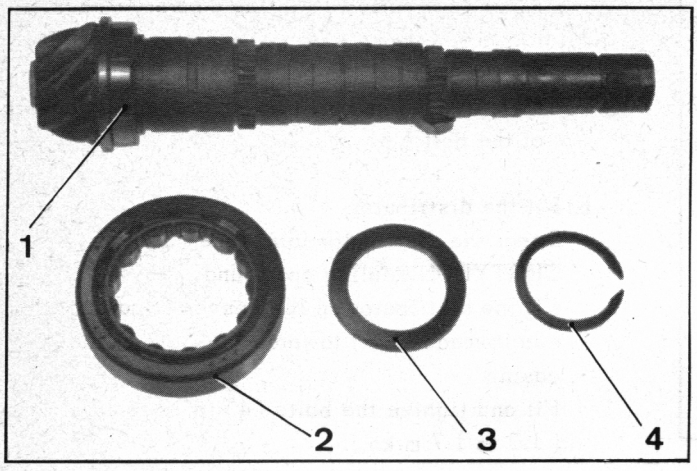

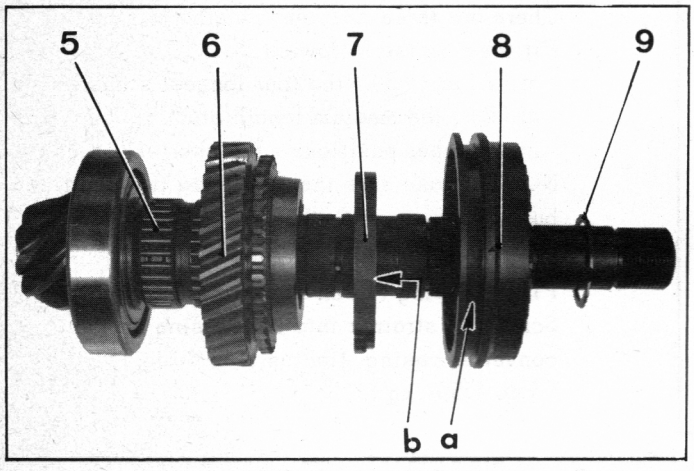

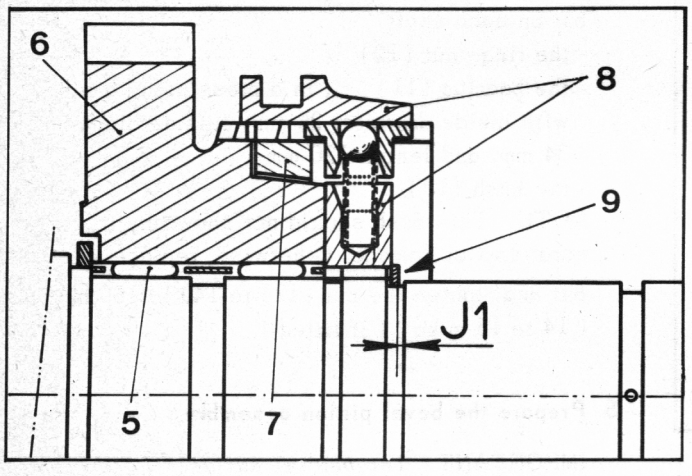

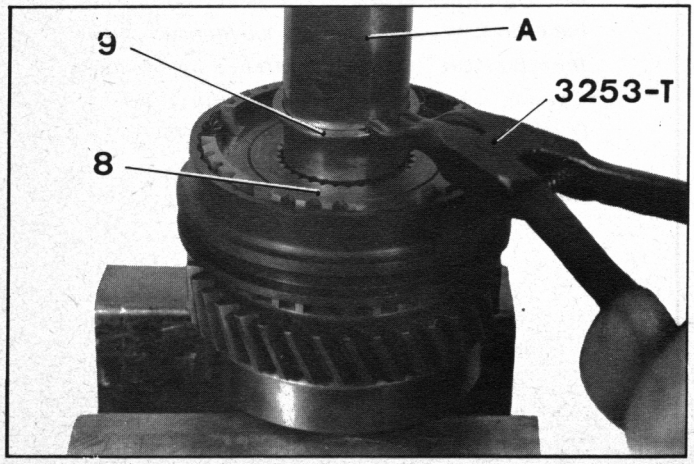

NOTE : The section of the ends of the stop rings is slightly relieved. Position the pointed part of the ends on the opposite side to the synchro ring so as to make it easier to remove the stop ring with circlip pliers 3253-T.

a) Fit the roller bearing :
Fit :
- on a press the inner cage (1) using a tube (inside diameter 45 mm, length 220 mm),
- the bearing (2) (the small diameter of the roller cage towards the pinion toothing)
- the thrust washer (3) (the face without markings towards the rollers),
- the stop ring (4) using pliers 3253-T, protecting the bearing surface for the reverse gear pinion with a sheet of foil (see paragraph d).

b) Fit :
- the needle cage (5),
- the reverse gear pinion (6),
- the reverse gear synchro ring (7),
- the reverse/1st gear synchro hub-sliding gear assembly (8) (groove « a » towards reverse gear pinion).

NOTE : The reverse/1st gear synchro rings are different from those of 1st and 2nd gear fitted on a four-speed gearbox.
They are marked with three equidistant bosses (120°) cast integrally (0.5 mm thickness) and fitted at « b » on the hub side face of the synchro.

c) *Adjust the axial clearance of the reverse/1st gear synchro hub :*

From the stop rings sold by the Replacement Parts Department, choose the one which gives a maximum clearance J1 = 0.05 mm (a 0.05 mm shim must not pass between the ring (9) and the side of the groove). The ring thicknesses are available in steps of 0.04 mm.

d) Fit the stop ring (9) :

Wrap the bevel pinion with a sheet of foil A (thickness of 0.10 mm).

With the aid of pliers 3253-T, separate the rings ends. Engage the ring on the foil.
Slide the foil-ring assembly until the ring can enter the groove.

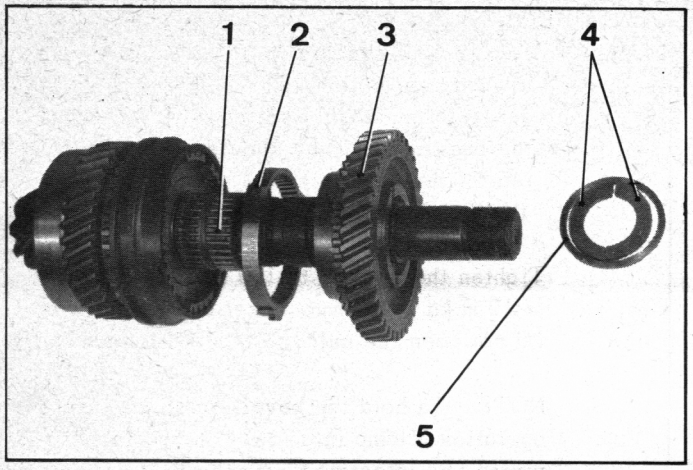

9538

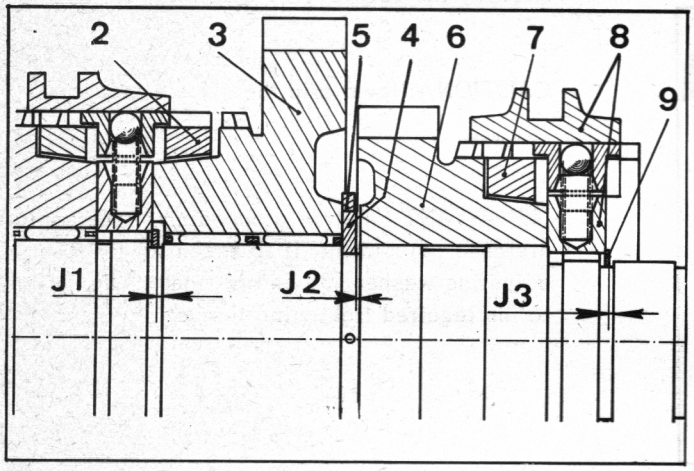

G. 33-10 a

Manual 810-2

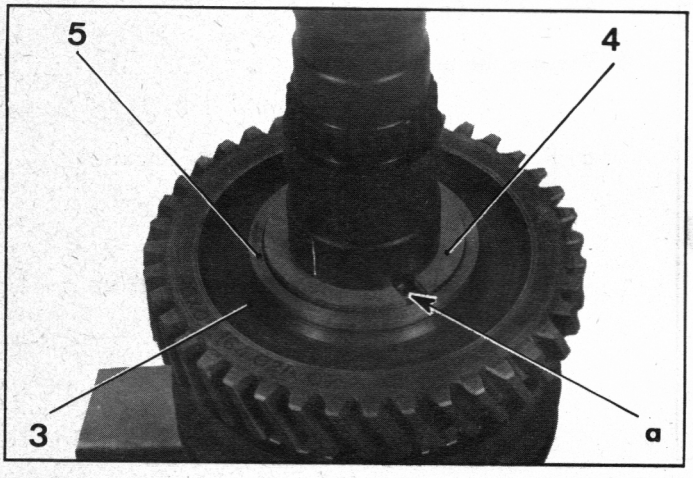

8268

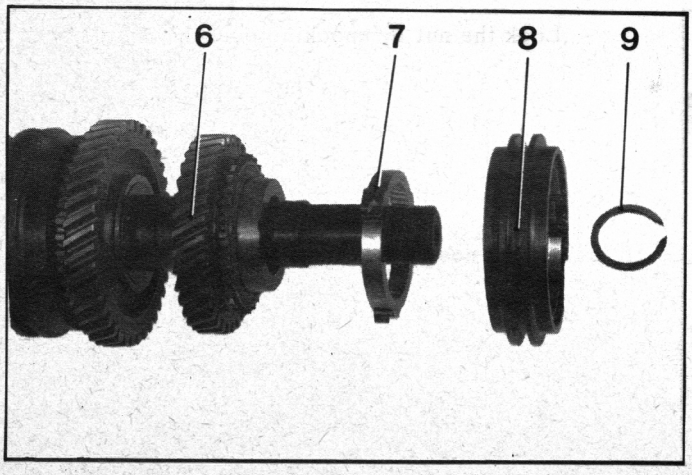

9537

e) Fit :
- the needle cage (1),
- the 1st gear synchro ring (2) (See note paragraph 5 b),
- the 1st gear pinion (3).

NOTE : *Since March 1, 1971* the 1st and 2nd gear synchro rings and pinions have been modified.

On gearboxes produced prior to that date, the exchange of a ring will entail the exchange of the corresponding pinion.

f) *Adjust the clearance of the 1st and 2nd gear wheels by choosing the thickness of the half-washers (4) :*

With the half-washers fitted, there should be a *maximum clearance J2 = 0.05 mm* between the half-washer and the side of the groove. (A 0.05 mm shim must not be able to pass). The half-washers are available in steps of 0.03 mm; choose the thickest half-washers which will fit into the groove.

NOTE : The two half-washers must have the same thickness.

Fit the two half-washers (4) on both sides of the stop pin « a ». Fit the washer (5).

g) Fit :
- the 2nd gear pinion (6),
- the 2nd gear synchro ring (7),
- 2nd/ 3rd gear synchro hub-sliding gear assembly (6).

NOTES :
- The assembly (8) is symmetrical.
- See Note in paragrah e).

h) *Adjust the axial clearance of the 2nd/ 3rd gear synchro hub :*

There should be a *maximum clearance J3 = 0.05 mm.*

Proceed as for the 1st/ reverse gear synchro hub (see paragraph c).

i) Fit the stop ring (9).

Proceed as for the 1st/reverse gear synchro hub locking ring (see paragraph d).

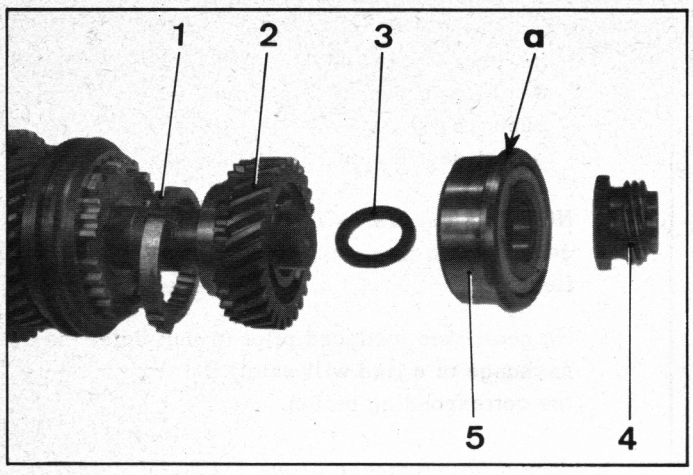

7292

j) Fit :
- the 3rd gear synchro ring (1),
- the 3rd gear pinion (2),
- an adjusting washer (3) of known thickness,
- the bearing (5) (the shoulder « a » facing the rear of the bevel pinion),
- the hex.-head bolt (4).

Tighten the nut (4) to 100 to 120 mΛN (10 to 12 m.kg) (36 mm socket and torque wrench). Do not peen the nut.

NOTE : To hold the bevel pinion during the operation, clamp in a jawed vice the 1st gear pinion (6) integrated with the bevel pinion shaft by the 1st/reverse gear slider.

CAUTION : Never grip the sliders in a vice.

IMPORTANT : Before proceeding to the conic distance adjustment, it is essential to fit an adjusting washer (3) and to tighten the nut (4) to the required tightening torque.

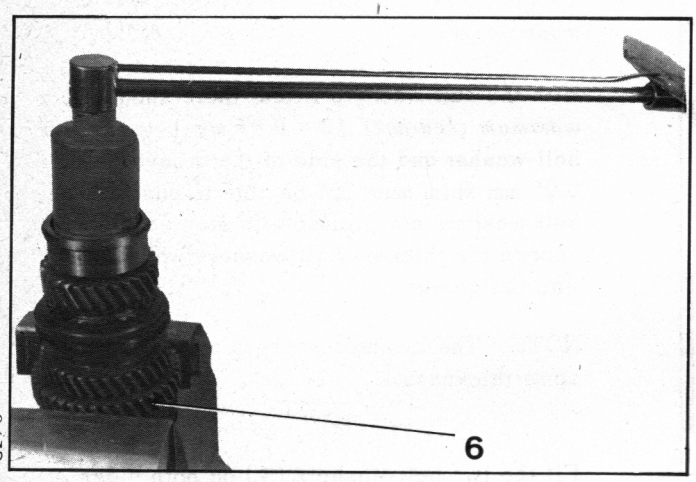

8270

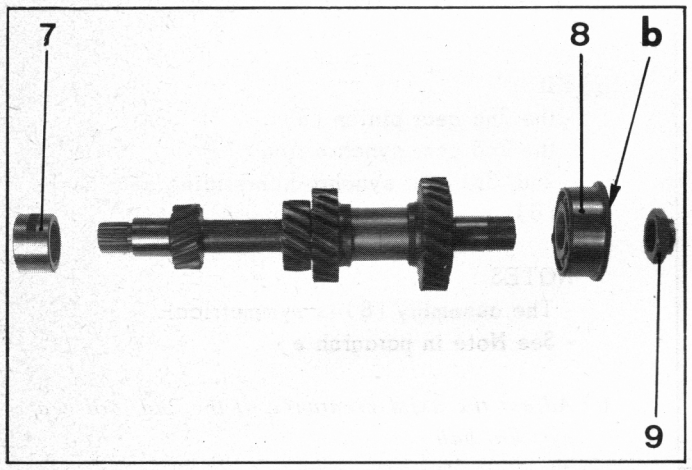

8264

6. Prepare the primary shaft :

a) Fit the ball bearing (8) with the shoulder « b » towards the rear.

Hold the shaft by clamping one of its pinions in a vice fitted with jaws.

Tighten the nut (9) to 70 to 85 mΛN (7 to 8.5 m.kg) (29 mm key).

Lock the nut by knocking over the metal.

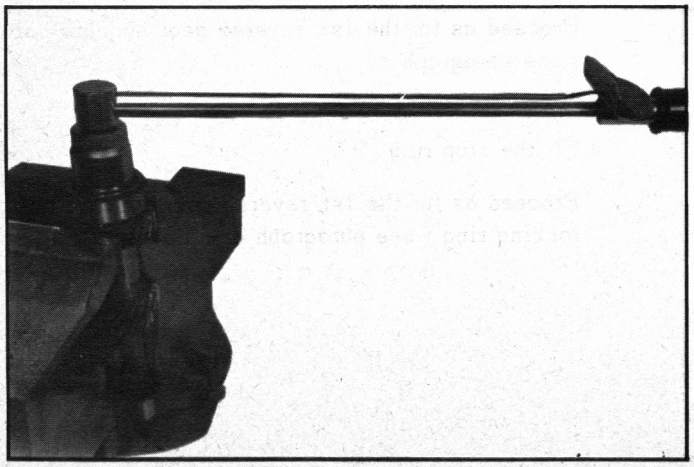
8271

b) Fit the needle bearing (7).

8282

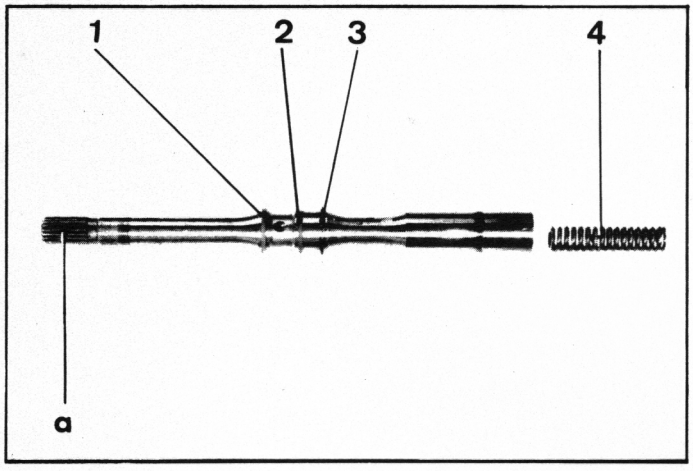

7. Prepare the control shaft :

Oil the seals (1) and (2), fit them on the shaft from the splined end of the shaft « a ».

Fit the circlip (3), replacing it if necessary.

NOTE : The spring (4) will only enter its housing when the shaft is fitted into the converter.

7904

Manual 810-2

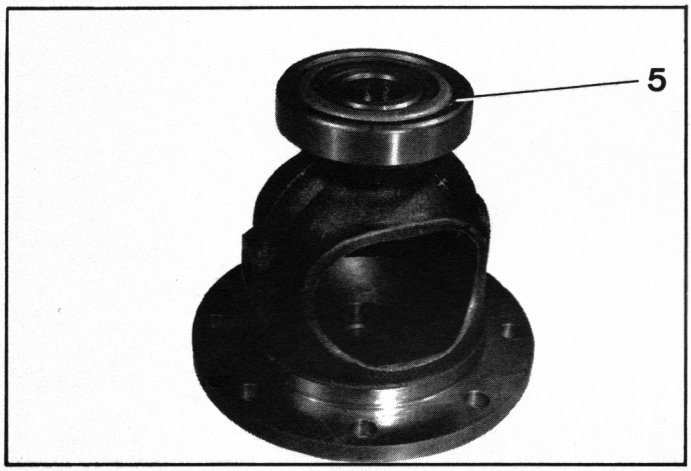

8. Prepare the differential casing :

Press fit the conical roller bearings using a tube (inside diameter = 36 mm, outside diameter = 45 mm, length = 40 mm).

NOTES :

- Do not invert the outer cages of the bearings.
- The differential casing must not be completely built up until after the crownwheel and pinion have been adjusted.

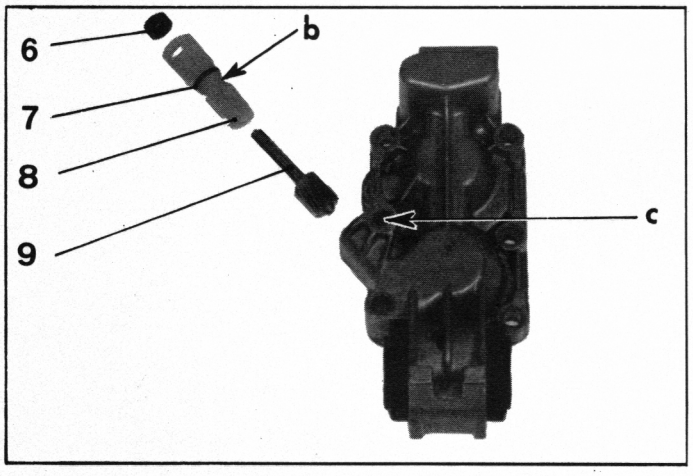

9239

9. Prepare the rear cover :

Fit the rubber seal (6) and the O-ring (7) on the speedometer drive socket (8) (new seals).

Engage the pinion (9) (shaft greased beforehand). in the socket (8).

Engage the speedometer drive assembly into the cover with the groove « b » of the socket (8) orientated for the screw at « c ».

10. Fit the seals of differential shafts :

a) On each half casing : grease the casing bore and seal periphery. Offer up the seal in its bore, *with the lip towards the inside of the casing.*

b) *Gearbox without bearing circlip :*

Fit the seal using mandrel 3184-T.E (contained in tool box).

NOTE : After fitting, the seal is 3 ± 0.5 mm below the bearing face of the differential bearing.

c) *Gearbox with bearing circlip :*

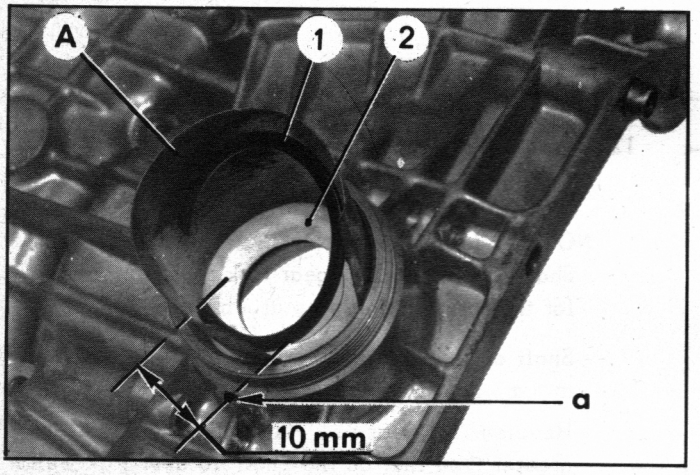

Manual 810-2

11247

Fit the seal (2), using a 51 mm diameter tube or a 36 mm socket spanner.

Press in the seal to the level of the circlip groove. Fit into the bore (1) the circlip using a sheet of foil A of length = 150 mm, width= 60 mm, and thickness = 0.20 mm . (Use the tube or the socket spanner to finally position the circlip).

Remove the foil and position the circlip and seal with the aid of the mandrel used for gearboxes without circlips.

NOTE : After fitting, one of the ends of the circlip must be about 10 mm from the drain hole « a ».

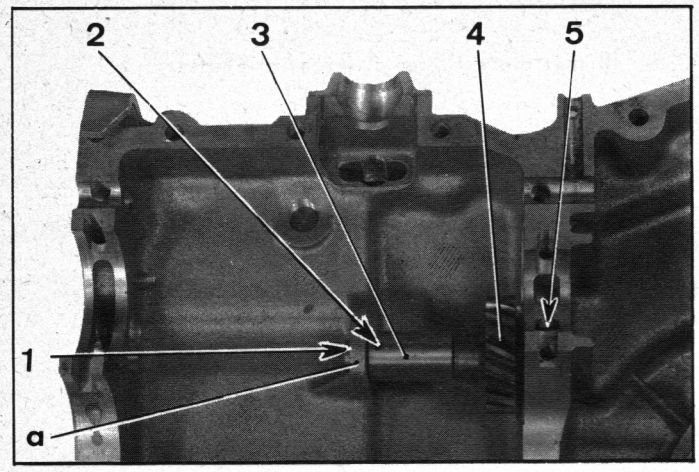

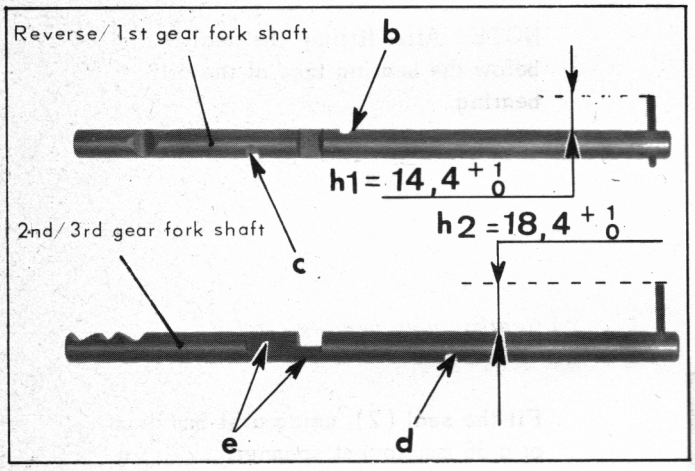

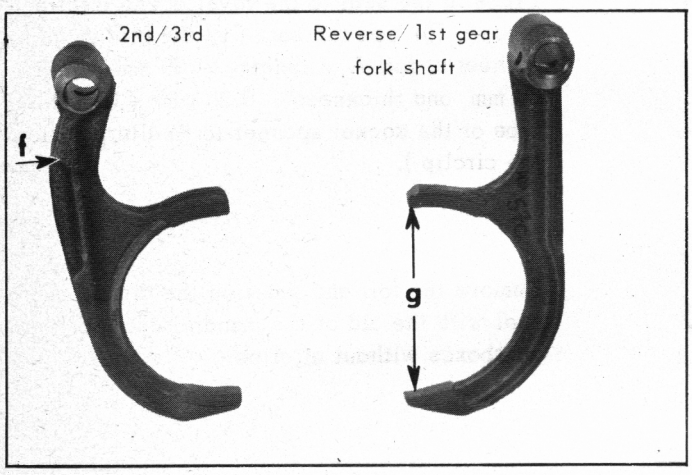

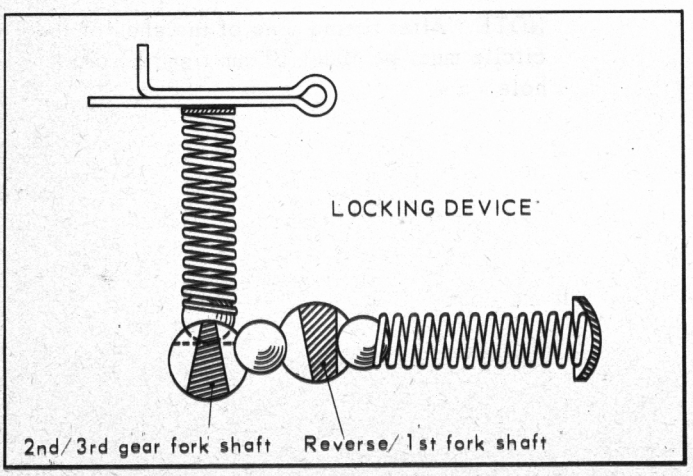

11. Prepare the left-hand half casing :

Offer up the spacer (3) and the intermediate pinion (4) of the reverse gear in the half casing (see photo top left for positioning the spacer and pinion).

Oil the shaft (1). Support the spacer and pinion and engage the shaft (1) in boss « a » : the shaft end having the stop notch must be placed towards the differential.

Position the shaft so that the cylindrical pin (5) can be fitted.

NOTE : *The cylindrical pin (5) which locks the needle bearing of the primary shaft must stand slightly proud of the surface of this bearing.*

Fit the Mecanindus pin (2) which holds the spacer (3) on the shaft (1).

12. Prepare the right-hand half casing :

NOTES : Identification of shafts and forks :
- Shaft of reverse/ 1st gear fork : two notches for the fork locking pins at « b » and « c ».
- Shaft of 2nd/ 3rd gear fork : a single notch at « d » and two flats at « e ».
- Reverse/ 1st gear fork : distance « g » is greater than that on the 2nd/ 3rd gear fork which has a rounded rib at « f ».
- The three locking balls and springs are identical.

a) Fit the Mecanindus pins which operate the control switch unit on the fork shafts :
- Position the split of each pin perpendicular to the longitudinal axis of the fork shaft.
- Adjust the projection of each pin :
  - on the reverse/ 1st gear fork shaft :
    $b1 = 14.4 {}^{+1}_{0}$ mm
  - on the 2nd/ 3rd gear fork shaft :
    $b2 = 18.4 {}^{+1}_{0}$ mm

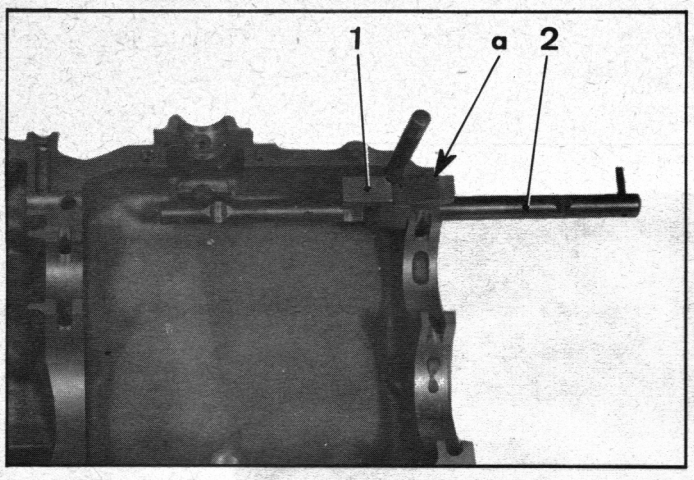

9549

b) Fit the reverse/1st gear fork and shaft and the reverse gear operating lug :

CAUTION : *When fitting the Mecanindus pins which hold the lug or the fork on the shaft, hold the shaft-fork or shaft-lug assembly against one of the casing bearings to avoid bending the shaft.*

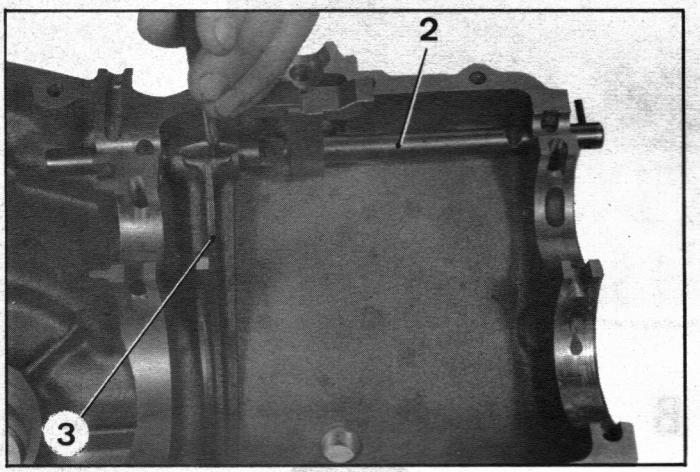

8240

- Engage the shaft (2) in the rear bearing of the casing.
  Engage the reverse gear operating lug (1) on the shaft (the lead-in « a » towards the rear of the casing).
  Fit the Mecanindus pin which holds the lug by holding the lug-shaft assembly against the rear bearing of the casing.
- Engage the reverse/1st gear fork (3) on the shaft (2).
  Move the shaft-fork assembly towards the front.
  Fit the Mecanindus pin holding the fork (3) against the front bearing of the casing.
- Move the shaft assembly (2), fork and lug towards the rear.
  Fit the locking ball and spring into their housing « b » (grease ball and spring beforehand).
  Compress the ball and spring (use 5 mm diameter rod) and insert the shaft (2) in the front bearing as far as « neutral » position.

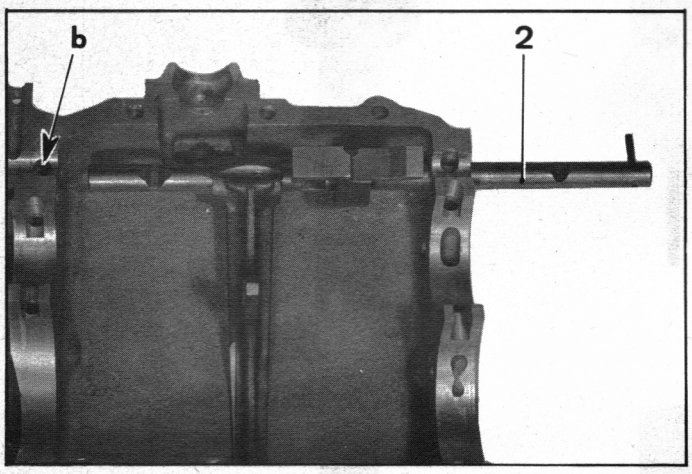

9551

Manual 810-2

c) Fit the 2nd/3rd gear fork and shaft :
Grease and fit the ball between the reverse/1st gear shaft and the 2nd/3rd gear shaft at « a ».
Offer up the 2nd/3rd gear fork (5) in the casing.
Engage the shaft (4) in the fork (5) and then in the bore of the lug (1).
Fit the Mecanindus pin holding the fork (5) against the rear bearing of the casing.
Move the shaft (4) and fork (5) assembly as far as « neutral » position.

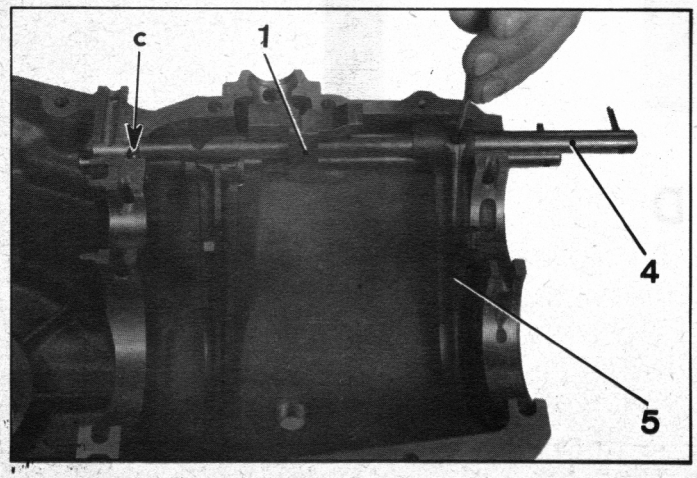

8243

TOOLBOX - 3184-T

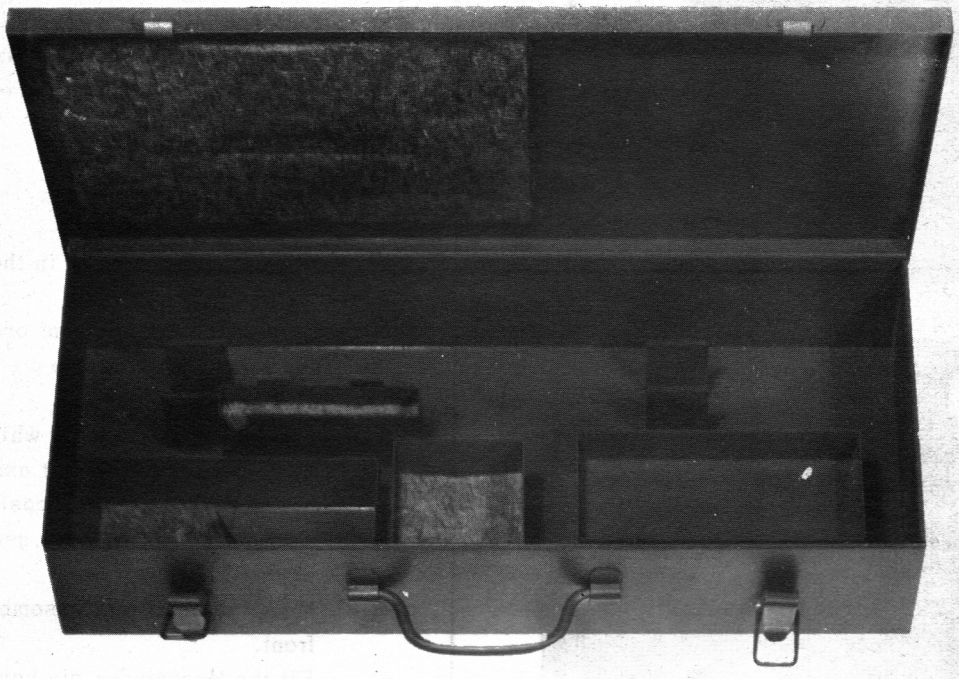

A



B

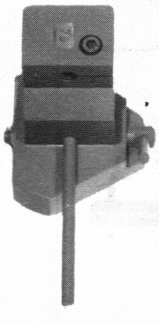

C

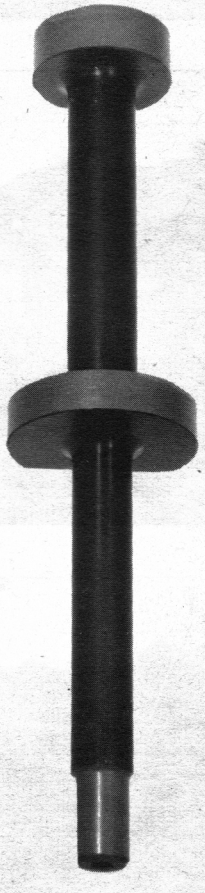

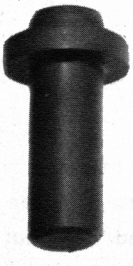

F



E



D

9349

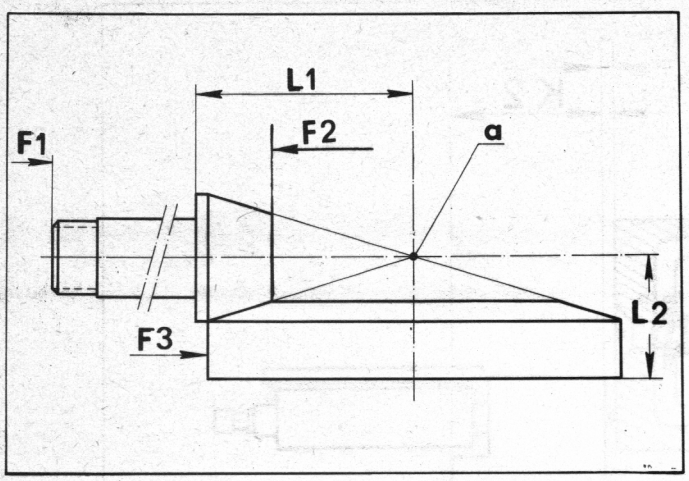

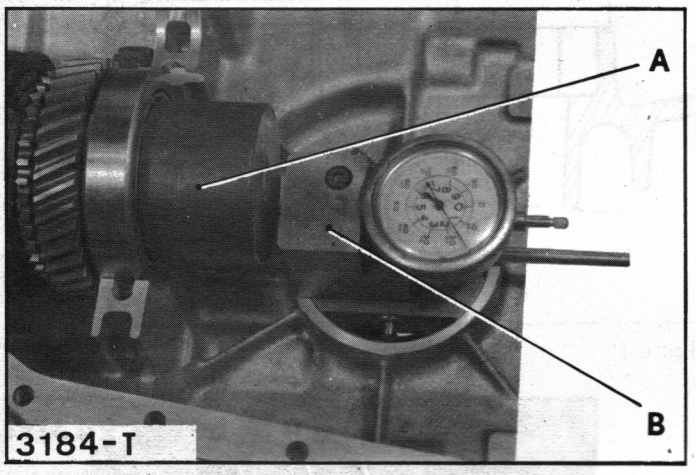

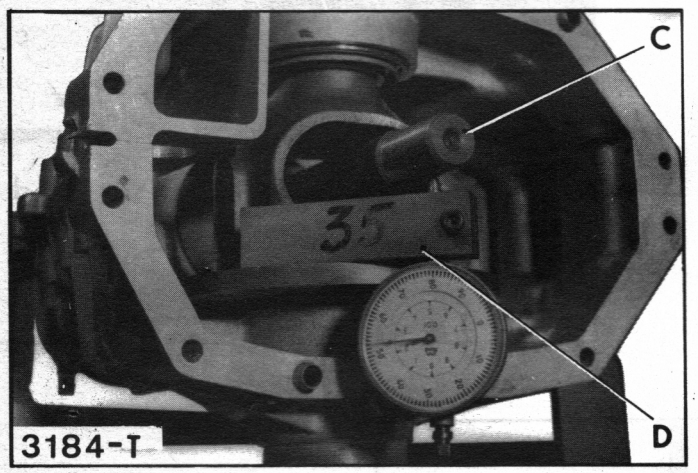

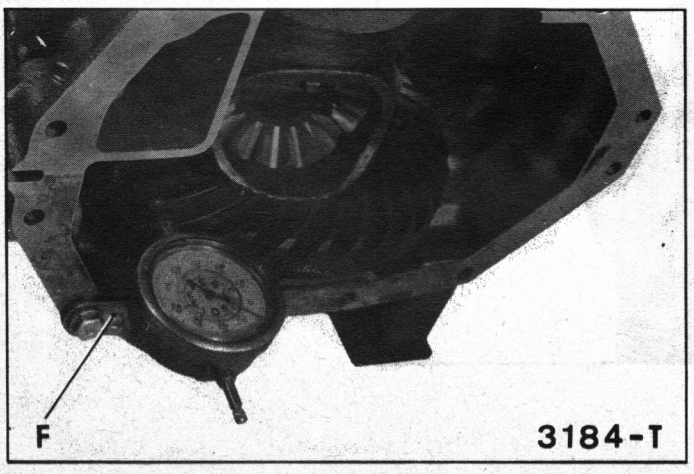

IV. ADJUSTMENT OF THE CONIC DISTANCE.

NOTE : This adjustment is highly important. By correctly setting the contact area it ensures silent operation and long service from the crownwheel and pinion..
The bevel pinion and the crownwheel are paired and marked with identical inscriptions engraved with an electric scriber on face F1 of the pinion shaft and on side F3 of the crownwheel (never separate a bevel pinion from its crownwheel).

NOTE : On some couplings, the pairing mark of the pinion is engraved not on face F1 of the shaft, but on face F3 of the pinion.

1. Principle of adjustment :

In addition to the pairing marks, two dimensions are engraved on the side F3 of the crownwheel.

The larger dimension (example 82.05) represents the distance L1 from the intersection « a » of the differential centre lines to the thrust face for the bevel pinion bearing.

The smaller dimension (e. g. 40.00) is the distance L2 from the intersection « a » of the differential centre lines to the thrust face of the crownwheel on the casing.

To obtain these dimensions, it is neccessary to adjust the position of the pinion, then that of the crownwheel using adjusting washers whose thicknesses are to be determined.

It is essential that the conic distance should be adjusted using fixture 3184-T and dial gauge 2437-T.

For the adjustment of the bevel pinion position, use cap A and dial gauge support B.

For the adjustment of crownwheel position, use mandrel C and straight edge D of the dial gauge.

For checking the clearance between teeth use dial gauge support F.

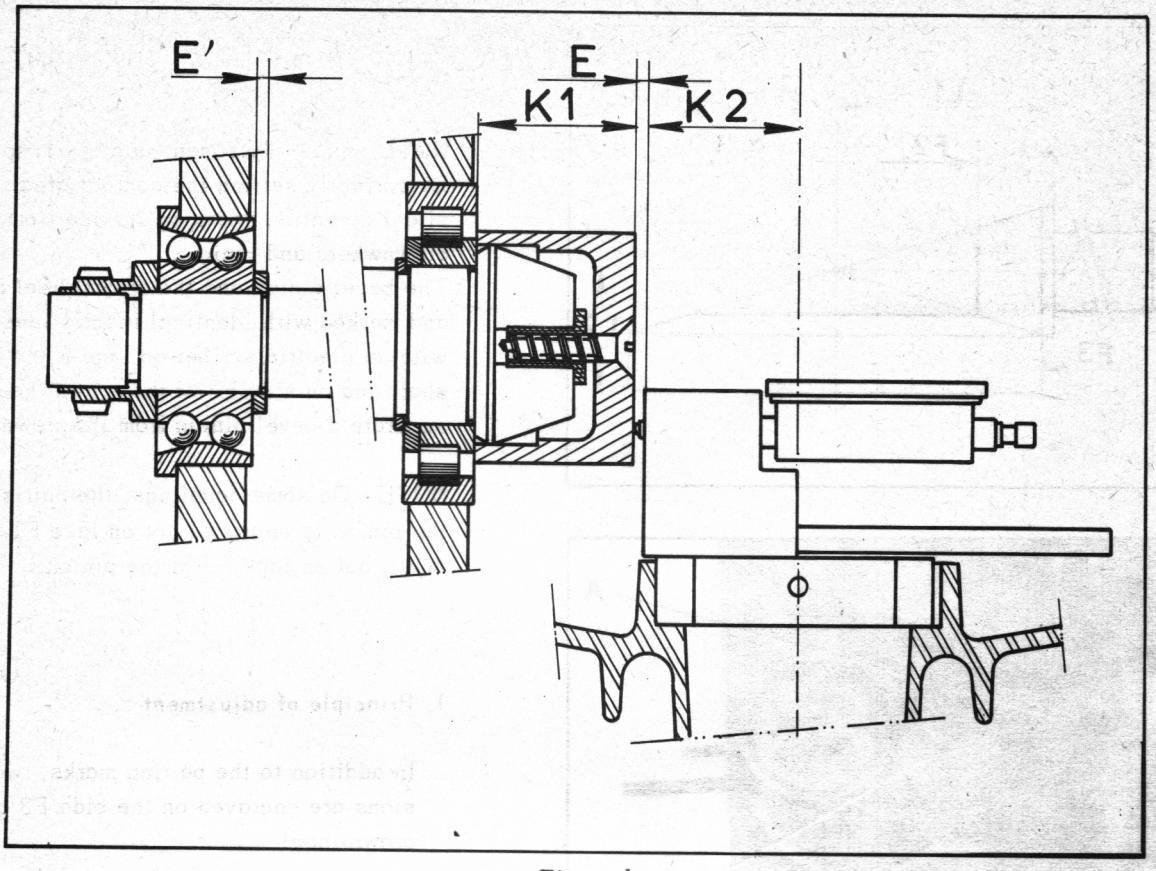

Figure 1

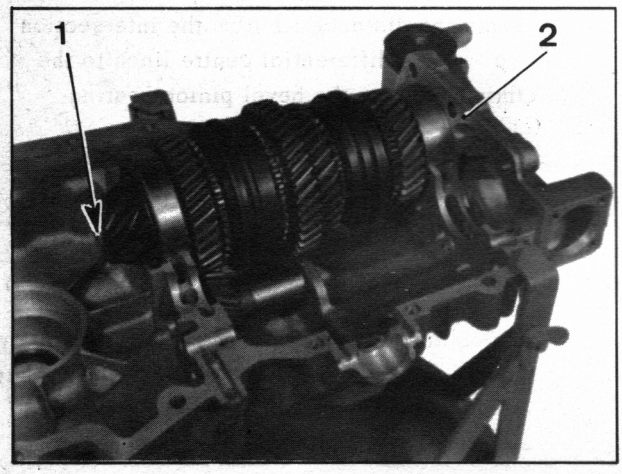

Figure 2

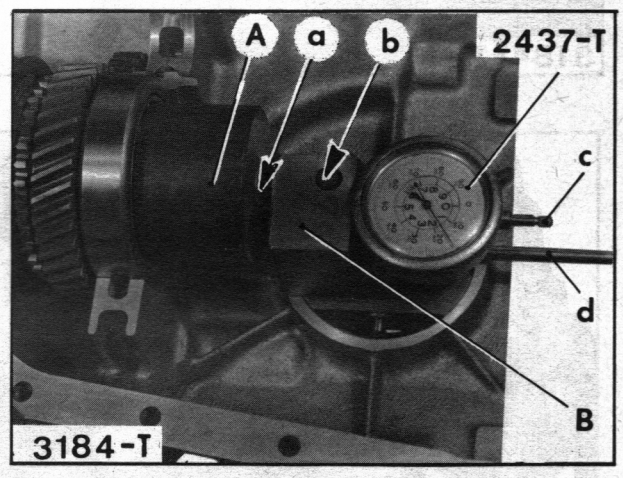

Figure 3

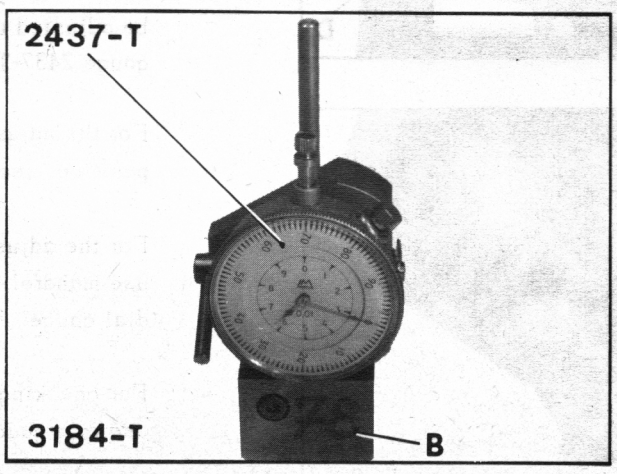

Figure 4

2. Adjustment of the bevel pinion position :

a) Fit the assembly of bevel pinion and gears in the left-hand half casing. Fit the rear cover (2). Hold with the aid of two bolts.
Note the larger dimension engraved on the crownwheel. For example : L1 = 82.00 mm.

b) Fit the cap A of fixture 3184-T as shown in figure 3. Hold it with the aid of bolt « a » screwed in the plastic gap (1).

c) Carefully clean the housing of the differential bearing in the half casing : it should be free of all traces of damage or burrs.

d) Fit a dial gauge 2437-T on support B. Place the support on a surface plate (see figure 4). Bring the zero of the moving dial opposite the large needle of the gauge. Note the position of the integrating needle.
Example : integrating needle between 6 and 7.
The assembly of cap A and support B with the dial gauge in the calibration position corresponds to a distance K1 + K2 = 78 mm. This dimension is engraved on support B at « b » (see figure 3).

e) Fit the support B in the casing. Thoroughly engage it in the bore of the differential bearing.
With the aid of handle « d » pivot support B first in one direction, then in the other and immobilize at the exact point at which the large needle changes direction.
Check the position of cap A : rotate the bevel pinion; the dial gauge should show a maximum variation of 0.2 mm
If not, modify the position of cap A on the pinion.

f) Determine the bevel pinion position. :
Bring the dial gauge needles back to their calibration position (see paragraph d).
Example : integrating needle between 6 and 7 and the large needle on zero.
Slowly release the moving rod « c » of the dial gauge and count the number of turns or fractions of a turn made by the large needle until the gauge stem touches the cap.
Example : the large needle has made 4.44 turns therefore E = 4.44 mm.
The position of the driving pinion is therefore :

K1 + K2 + E or 78 + 4.44 = 82.44 mm

The pinion is too far from the centre line of the differential by :

82.44 - 82 = 0.44 mm

It is therefore, necessary to replace the existing washer by another of thickness greater than 0.44 mm.
Example : the existing washer has a thickness of 2.50 mm.
It must be replaced by one of thickness : E' = 2.50 + 0.44 = 2.94 mm.

NOTE :
If the distance noted is less than the dimension engraved on the driving pinion, the latter is too close to the differential centre line and the existing washer must therefore be replaced by a thinner one.

3. Remove the adjusting fixture and dial gauge, the rear cover, the crown wheel and pinion and gear assembly.

4. Remove the bevel pinion nut.

Release the bearing and the adjusting washer, replace it by the washer the thickness of which has just been ascertained.

NOTE : The washers sold by the Replacement Parts Department have thicknesses graduated in steps of 0.4 mm. Select one, the thickness of which is nearest to the determined dimension.

5. Fit the bearing and the nut. Tighten the nut to 100 to 120 mΛN (10 to 12 m.kg) (torque wrench).

Lock the nut by peening.

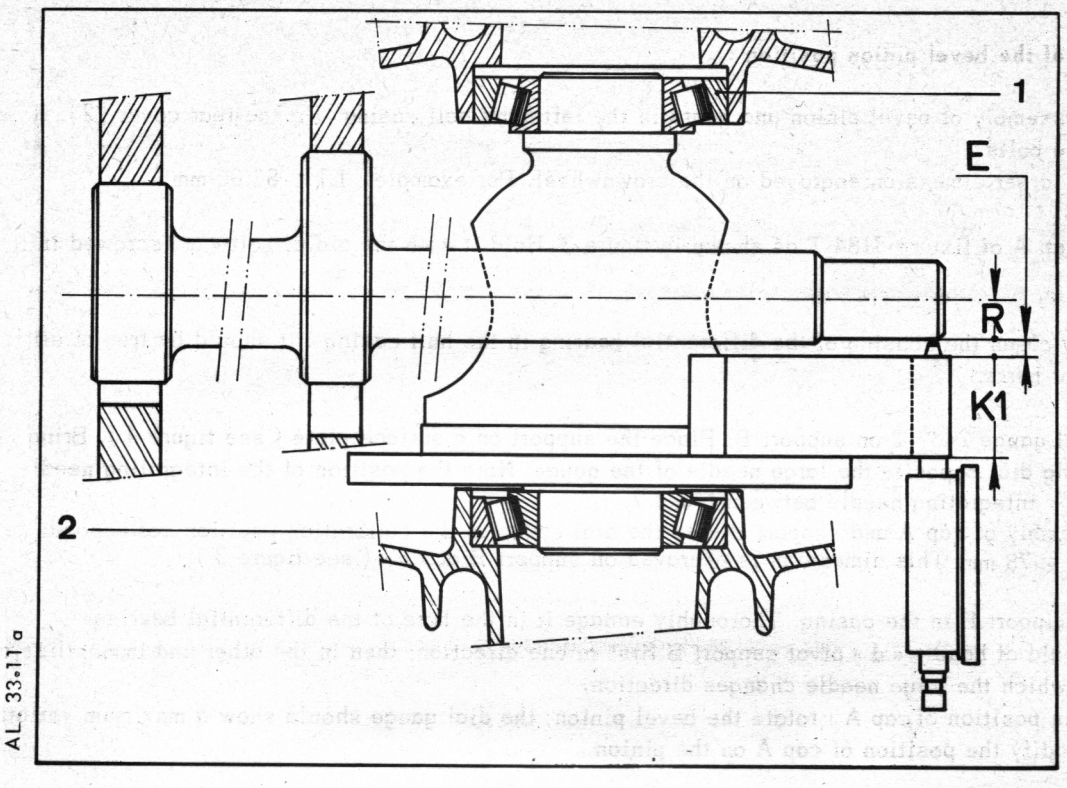
1
E
R
K1
2
AL. 33-11 a

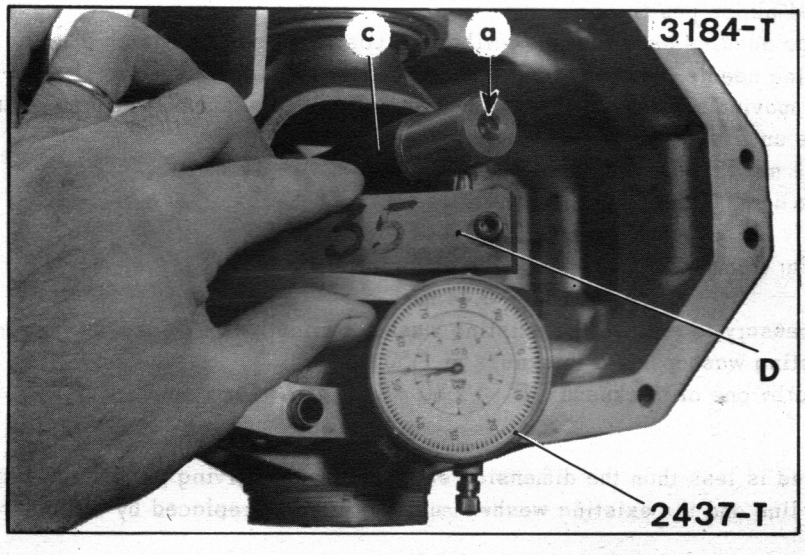
c
a
3184-T
D
2437-T
7698

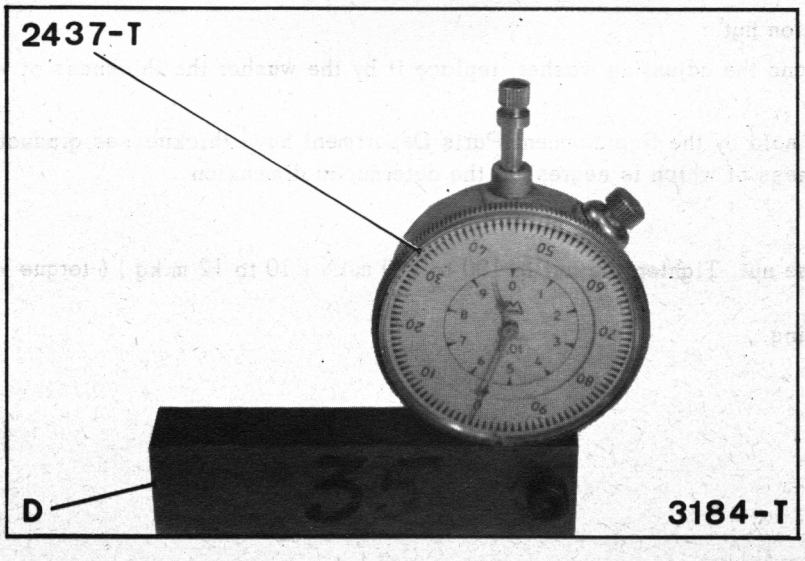
2437-T
D
3184-T
7705

6. Adjust the crownwheel position :

a) Adjustment principle : Using shims, it is necessary to ensure :

- first that the distance between the crownwheel bearing face on the casing and the bevel pinion centre line is equal to that engraved on the side of the crownwheel which gives correct clearance between teeth and bearing surface area.

- secondly a stress on the bearings to conserve the preceding adjustment under the action of the engine torque. This stress corresponds in practice to a compression of the bearing in its bushes and therefore, to a displacement of the differential assembly which can be expressed in millimeters. This must be taken into account in determining the thickness of the shims. It is calculated at 0.025 mm per bearing and, therefore 0.05 mm for the two bearings. In the adjustment operation, allowance will therefore be made for the recoil of the casing in the determination of the thickness of the left-hand shim (+ 0.025 mm) and the total stress on the two bearings (+ 0.05 mm) in the determination of that of the right-hand shim.

b) Fit the outer cage (2) of the left-hand bearing of the differential in its housing (without shim).
Fit the differential casing.
Position the mandrel C with its end « a » engaged in the opening in the casing.
Fit the outer cage (1) in its housing in the right-hand half casing (without shim).

NOTE : The bores taking the bearing rings should be clean and free from defects or burrs. The cages must slide freely.

Fit the right-hand half casing.

Fit the rear cover. Fit the bolts but do not tighten.

Fit and hand tighten the fixing bolts.

Tighten the rear cover bolts and those of the half casings.

NOTE : It is necessary to fit the rear cover in order to position the half casings in relation to one another.

Make sure that the differential casing is in place and that the outer cage (1) is in contact with the rollers of the bearing.

c) Calibrate the straight edge-D-dial gauge assembly.

Fit straight edge D with a dial gauge and place on a surface plate. Adjust the gauge position so that it operates between 8 and 9 mm.

Bring the zero of the moving dial opposite the large needle.

Note the position of the integrating needle.

Example : integrating needle is between 8 and 9
The assembly of mandrel C and straight edge with dial gauge in the calibration position corresponds to a distance :

$$K1 + R = 35 \text{ mm}$$

This dimension is engraved on one of the sides of the straight edge.

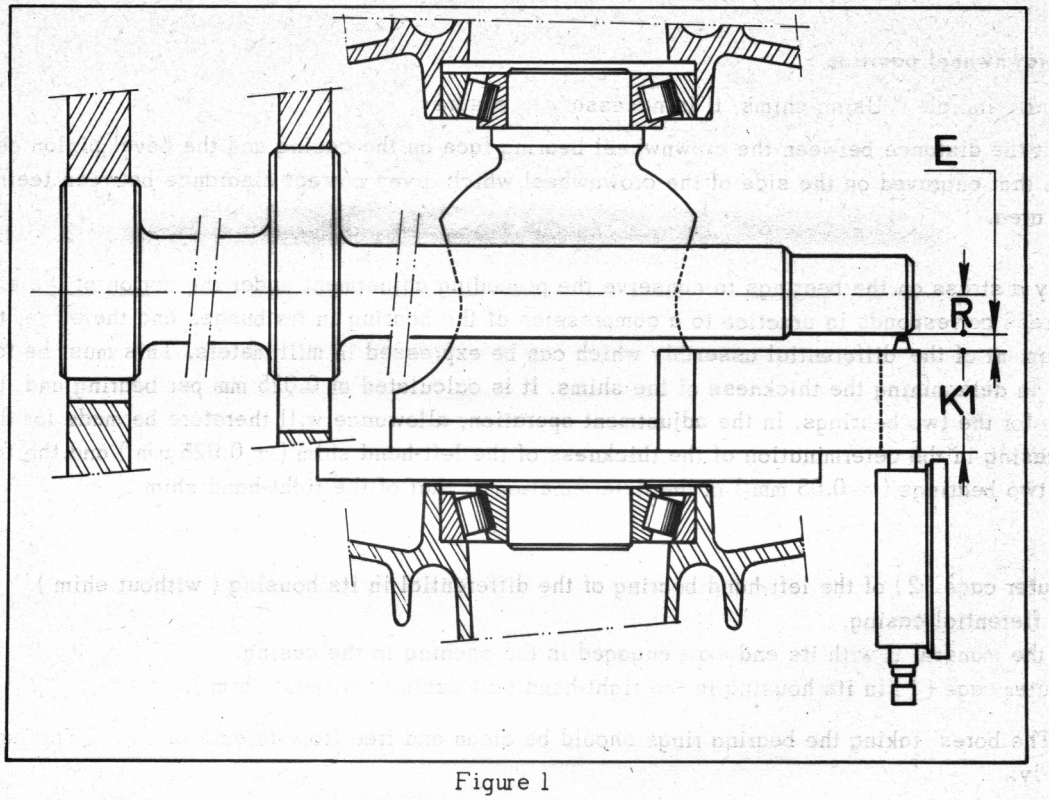

Figure 1

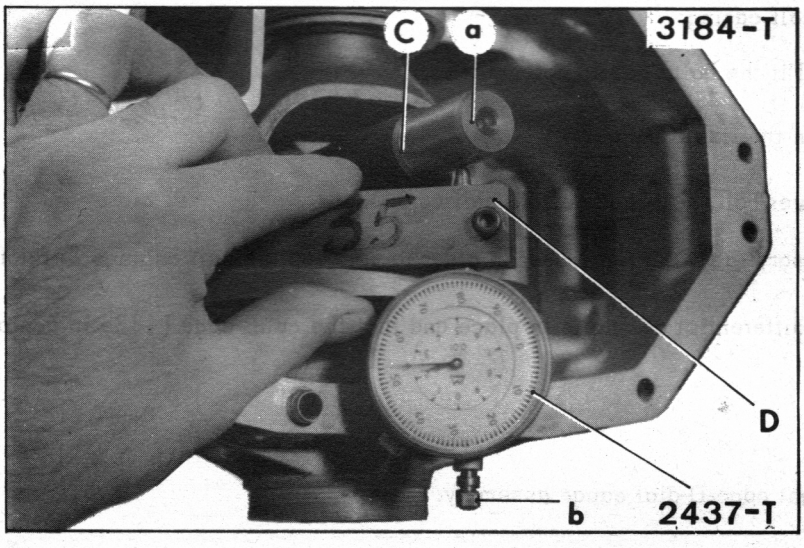

Figure 2

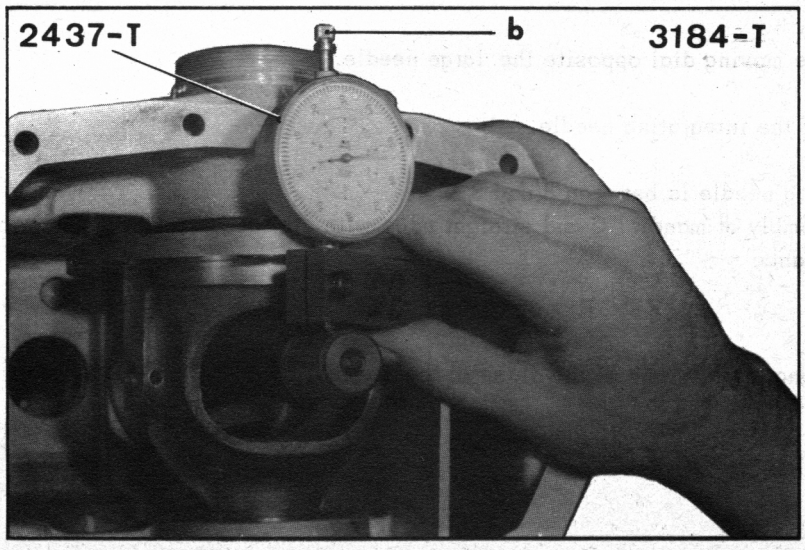

Figure 3

d) Fit the straight edge D on the bearing face of the crownwheel on the casing, the dial gauge stem touching the end « a » of mandrel C.

Hold the straight edge resting on the casing and rotate the straight edge-casing assembly in one direction and then in the other and immobilize it at the exact point at which the large needle changes direction. Take note of the position of the dial gauge needles. Pull on moving spindle « b » of the gauge to bring the needles to the calibration position. Then slowly release it, and count the number of revolutions or fraction of a revolution made by the large needle.

Example : The large needle has made 7.46 revolutions therefore E = 7.46 mm

The distance of the bearing face of the crownwheel from the bevel pinion centre line is therefore :

$$35 + 7.46 = 42.46 \text{ mm}$$

e) To determine the thickness of the washer to be fitted in the left-hand half casing (see figure 2) :

Note the dimansion engraved on the crownwheel. This distance is for example : 40.00 mm.

To obtain this dimension, it would be necessary to have a shim of :

$$42.46 - 40 = 2.46 \text{ mm}$$

It is necessary to add 0.025 mm for stressing the bearing. The shim should therefore have a thickness of :

$$2.46 + 0.025 = 2.485 \text{ mm}$$

The adjusting washers are sold by the Replacement Parts Department in steps of 0.05 mm. Therefore, choose a washer the thickness of which is nearest to the determined value of 2.50 mm.

Manual 810-2

f) Determining the thickness of the adjusting washer to be fitted in the right-hand half casing (see figure 3) :

Remove the casing from the support and place on the bench *resting on the right-hand half casing.*

IMPORTANT : Make sure that the differential is in place with the outer cage of the bearing resting on the shoulder of the right-hand half casing. Also make sure that *the outer cage of the left-hand bearing is resting on the rollers.*

Check the calibration of the straight edge-dial gauge assembly.

Fit straight edge D against the bearing face of the crownwheel on the casing, the dial gauge stem touching the end « a » of the mandrel C.

Hold the straight edge against the casing and proceed to measure as previously indicated for the left-hand side.

Example : The large needle has made 2.45 revolutions therefore E = 2.45 mm.

The distance of the bearing face of the crownwheel from the bevel pinion centre line is therefore :

$$35 + 2.45 = 37.45 \text{ mm}$$

Determining the thickness of the adjusting washer to be fitted in the right-hand half casing.

The dimansion engraved on the crownwheel being 40.00 mm, to obtain this size would require a shim of $40 - 37.45 = 2.55$ mm without taking into account the bearing stress. The total thickness (on the left-hand and right-hand side) of the shims would be $2.46 + 2.55 = 5.01$ mm. With a stress of 0.025 mm per bearing, therefore 0.05 mm for the two bearings, the total thickness would have to be $5.01 + 0.05 = 5.06$ mm.

For the left-hand side the thickness of the shim as stated in paragraph « e » must be 2.50 mm. Therefore, the thickness of the shim to be fitted on the right-hand side will be $5.06 - 2.50 = 2.56$ mm. The shims on sale are in thickness steps of 0.05 mm; choose a shim with a thickness of 2.55 mm.

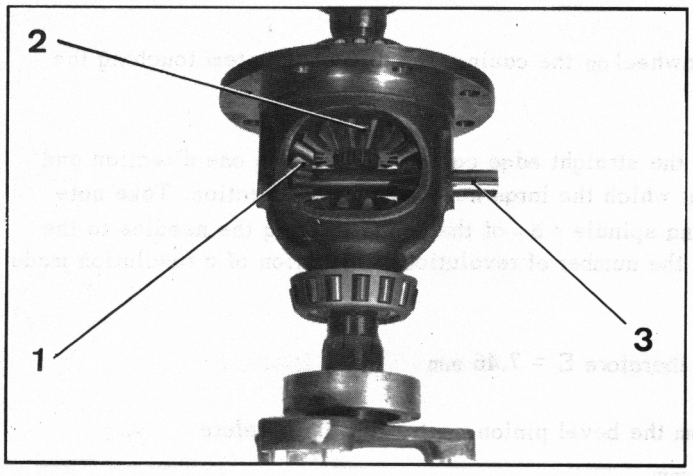

7391

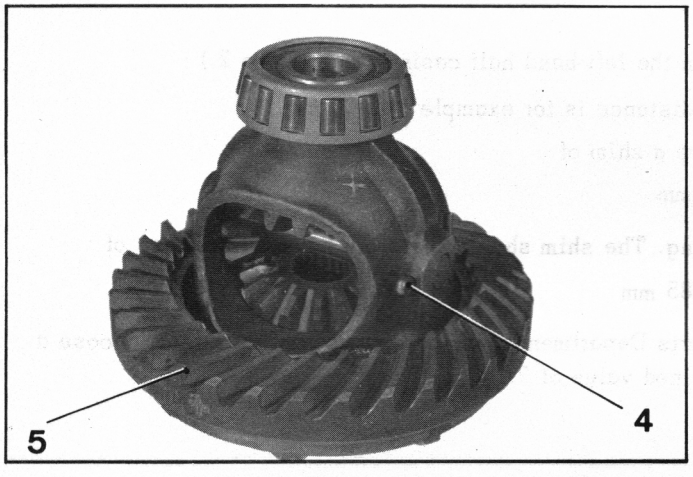

7386

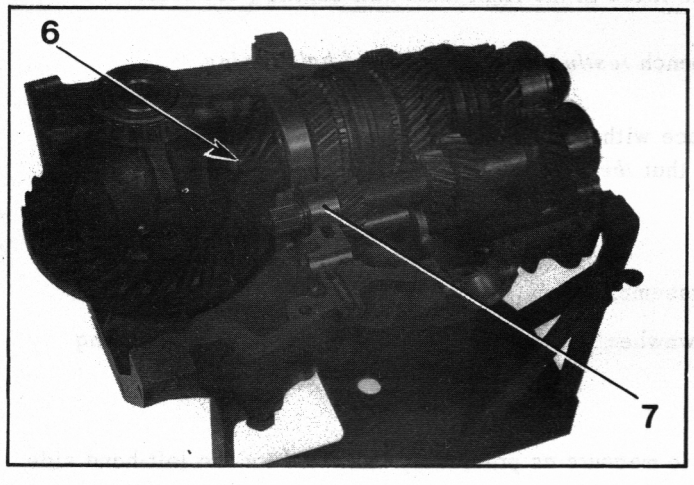

9563

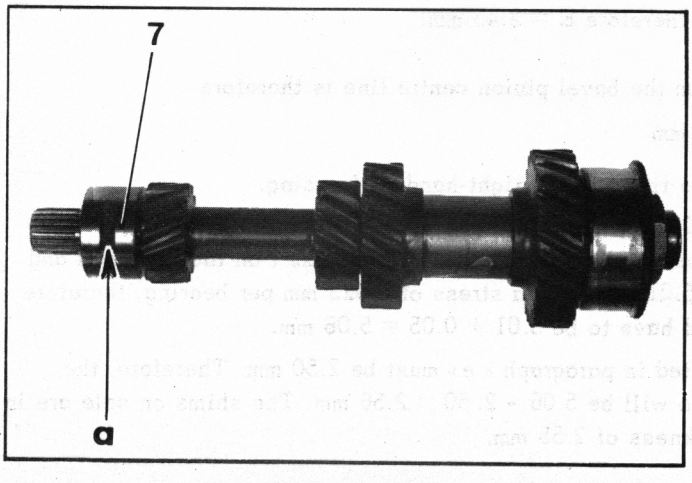

8281

V. FITTING

1. Fit the differential :

a) Oil the parts. Fit :
- the two planetary wheels (2) (hold them in place with the aid of the two differentail shafts),
- the satellite wheels (1) and engage the shaft (3), correctly positioning the hole for the pin.

Fit the locking pin (4).

b) Fit the crownwheel (5) :
The 9 mm fixing bolts must be fitted with LOCTITE GX 01 460 01 A and tightened to 48 to 53 mΛN (4.8 to 5.3 m.kg) (torque wrench).

NOTES :
- Do not put washers under the bolt heads.
- To assure correct fitting of the crownwheel successively tighten the diametrically opposite bolts.

c) Fit the differential in the left-hand half casing.

2. Fit the bevel pinion assembly :

Check the condition of the plastic cap (6). Replace if necessary.

CAUTION : Be careful not to introduce any foreign bodies into the central hole of the bevel pinion, which could interfere with the lubrication of the bearing of the reverse gear loose pinion.

Fit the assembly in the left-hand half casing.

3. Fit the primary shaft :

Fit the primary shaft in the left-hand half casing.

Turn the needle bearing (7) so that the end of the locking pin on the reverse gear intermediate shaft enters the groove « a » of the bearing.

4. Checking the crownwheel to pinion backlash :

NOTE : If the adjustment of the conic distance has been carefully carried, out, the backlash should be correct.

It is, however, preferable to check it.

a) Fit the right-hand half casing on the left-hand one. (Take care that the forks engage in the corresponding sliding gears).
Fit the four half casing assembly bolts but do not tighten them.
Fit the rear cover. Tighten the fixing bolts (rear cover is necessary for the correct alignment of the two half casings).
Fit and tighten the four half casing assembly bolts.

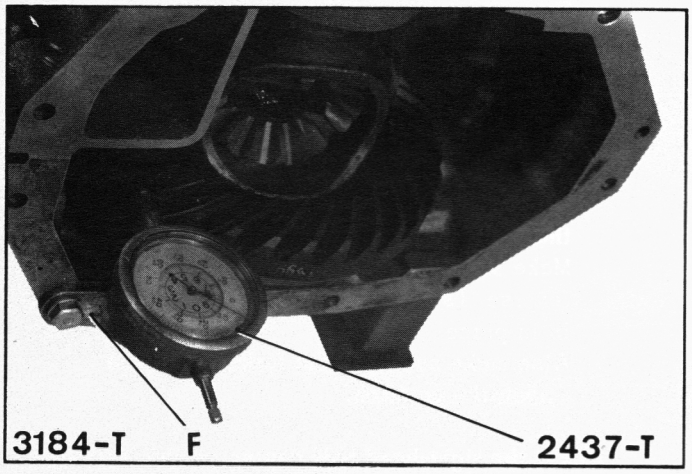

8290

b) Fit (as shown in illustration) the support F of fixture 3184-T fitted with a dial gauge so that its moving stem bears perpendicularly against the flank of a tooth, on the crownwheel periphery.
Measure the clearance, immobilizing the driving pinion by hand.
The backlash must be between 0.13 and 0.27 mm measured at the point of minimum clearance.

c) Note the clearance on three teeth spaced at about 120°. Take the average of the three measurements :
The difference between any two measurements must not exceed 0.1 mm.
Otherwise, the crownwheel is out of true (it must be replaced) or there is foreign body between the crownwheel and the differential casing.

d) Remove :
- the dial gauge and its support,
- the rear cover,
- the right-hand half casing.

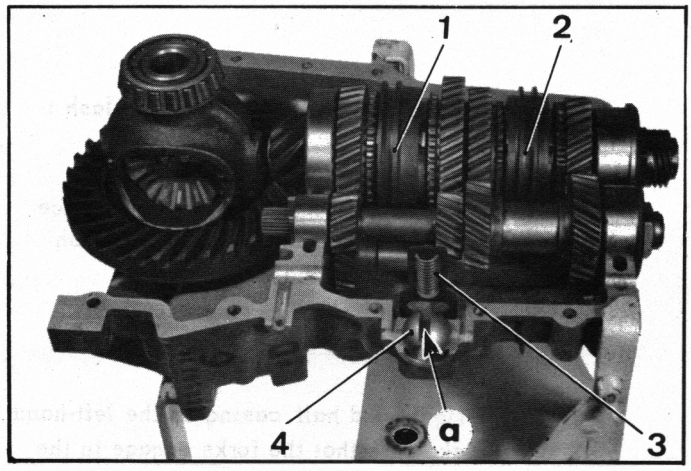

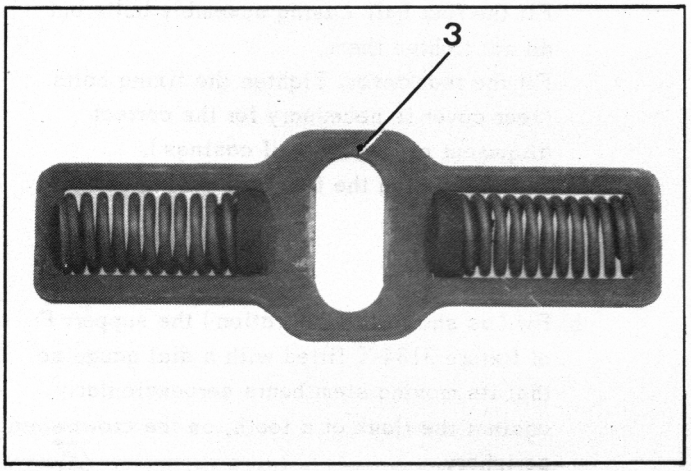

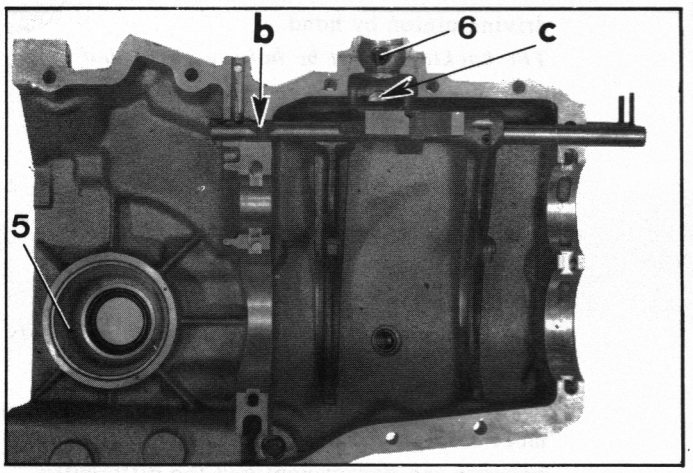

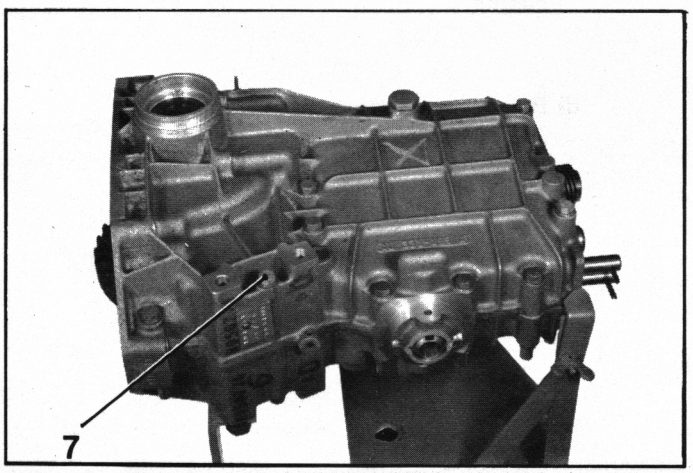

5. Fit the right-hand half casing on the left-hand one :

a) Smear the joint faces of the two half casings with sealing compound.
NOTE :
Use only CURTYLON sealing compound (manufacturer Société CEFILAC - FRANCE).
Smear only half the width of the joint face (towards the outside), the sealing compound must not penetrate the inside of the casing.

b) On the left-hand half casing :
Grease and fit the spring holder plate (3).
CAUTION : *Since January 3, 1972* the reverse gear locking device on the gear lever has been replaced by one in the gearbox.
The springs on plate (3) are different : the one with the largest diameter wire must be fitted towards the reverse gear intermediate pinion (in the left-hand half casing).
Grease and fit the ball joint (4) with the guiding groove « a » towards the right-hand casing side.
Temporarily fit a differential shaft to centre the planetary wheels.
Make sure that the sliding gears (1) and (2) are in the « neutral » position.

c) On the right-hand half casing :
Stick the spring and the ball joint guide (6) in their housing.
Make sure that the locking at « b » between the reverse/1st gear shaft and 2nd/3rd gear shaft is in place.
Also make sure that the forks are in the « neutral » position.

d) Fit the right-hand half casing on the left-hand half casing.
During this operation hold the inner cage (5) of the forks in the corresponding sliding gears.
At the same time, guide the spring holder plate into its housing « c » of the right-hand half casing. Make sure that the guide (6) enters the groove « a » of the ball joint (4).

e) Fit the half casing assembly bolts :
Fit the assembly bolts, without tightening them, final tightening should be done after fitting the rear cover (plain washer under the bolt head and capnut).

NOTES :
- The bolt (7) placed between the brake caliper mountings is the only one with a normal hexagonal nut.
- Do not forget the bolt of the central bearing on the left-hand half casing side.

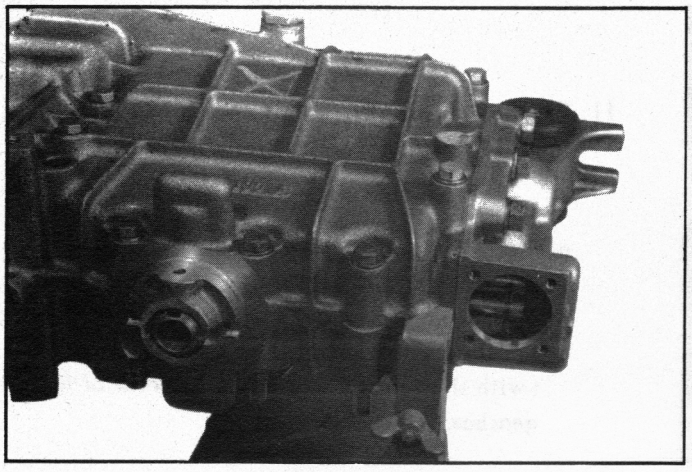

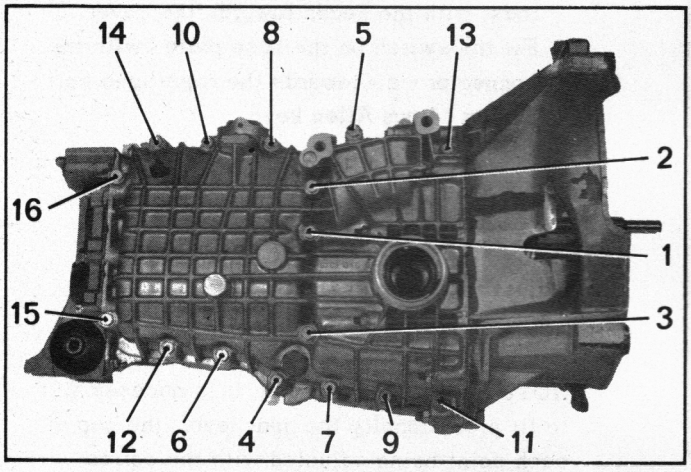

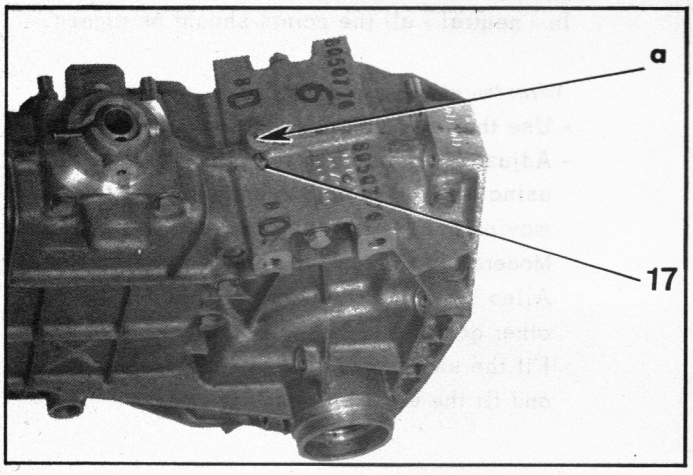

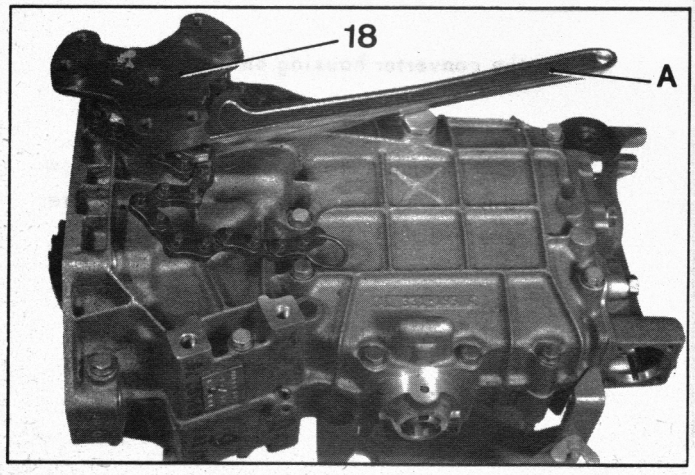

6. Fit the rear cover :

Smear the joint face of the rear cover with CURTYLON sealing compound.

Fit the rear cover on the gearbox casing.

Fit the assembly bolts, tighten them to 25 to 30 mAN (2.5 to 3 m.kg).

7. Completely tighten the half casing assembly bolts :

NOTE : The method for tightening these bolts is most important to ensure oil-tighteness of the half casings.

a) Slightly slacken the bolts holding the rear cover on the right-hand half casing.

b) Finally tighten the half casing assembly bolts to 14 to 15 mAN (1.4 to 1.5 m.kg).

IMPORTANT : Take care of the tightening sequence shown in illustration.

On some casings, the bolt (3) may be on the left-hand half casing.

c) Retighten the rear cover fixing bolts to 25 to 30 mAN (2.5 to 3 m.kg).

8. Fit the locking mechanism to the 2nd/3rd gear fork shaft :

At « d » position the locking ball and spring and the blanking pellet.

Compress the spring by pressing on the pellet (5 mm diameter rod) and fit the split pin (17).

9. Fit the differential shafts :

Make sure that the planetary gears are in place and that at the time of fitting the shaft splines engage in the splines of the planetary gears.

Fit the shafts (18) (tap lightly with a mallet to position bearing).

Tighten the ring-nuts, using a chain wrench A, to 60 to 75 mAN (6 to 7.5 m.kg).

Lock the ring-nuts by peening.

10. Fit and tighten the drain, level and filler plugs to 35 to 45 mAN (3.5 to 4.5 m.kg) (copper seal).

Fit the reverse light switch *on « CLUB » vehicles* : smear the contactor threads with MASTI-JOINT HD 37. Tighten the contactor to 12 to 15 mAN (1.2 to 1.5 m.kg).

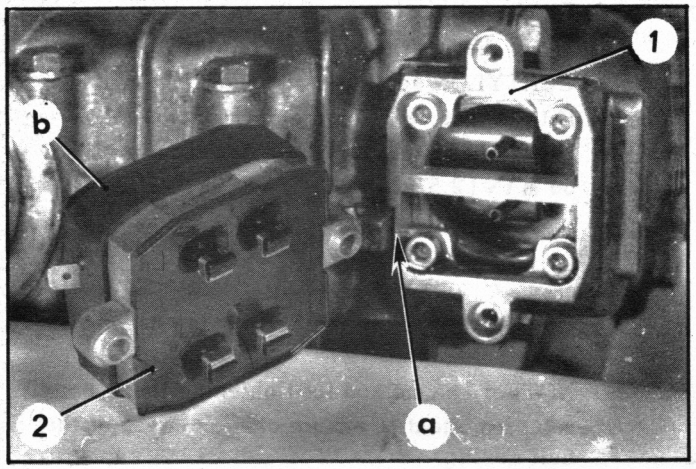

11. Fit the control switch unit on gearbox (starter inhibitor switch) :

a) Smear the seal face of the switch base plate (1) with CURTYLON sealing compound.
Fit the switch base plate on the rear cover (with the slot « a » towards the front of the gearbox (4 mm Allen key).

b) Engage the rubber seal (2) on the contact rods, with the heads towards the cover.
Fit the switch on the base plate (with the connector « c » towards the right-hand half casing (4 mm Allen key).

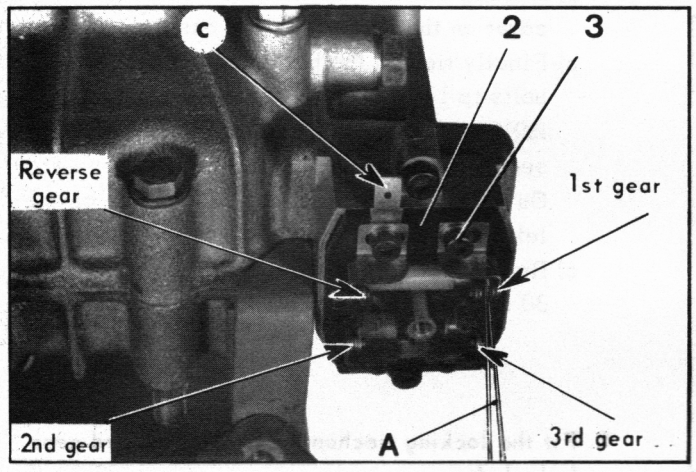

12. Adjust the switch points gap :

NOTE : For this operation, it is necessary to fit provisionally the gear lever, the gap of each point being adjusted with the corresponding gear engaged.
In « neutral » all the points should be closed.

Adjustment method :
- Use the lever (5) to engage a gear.
- Adjust the points gap to 1.4 ± 0.05 mm using a set of feelers A and shifting the moving point by means of screw (3). Moderately tighten the screw (3) (3 mm Allen key). Use the same method for the other gears.
- Fit the switch cover (4) (3 mm Allen key) and fit the elastic collar « b ».

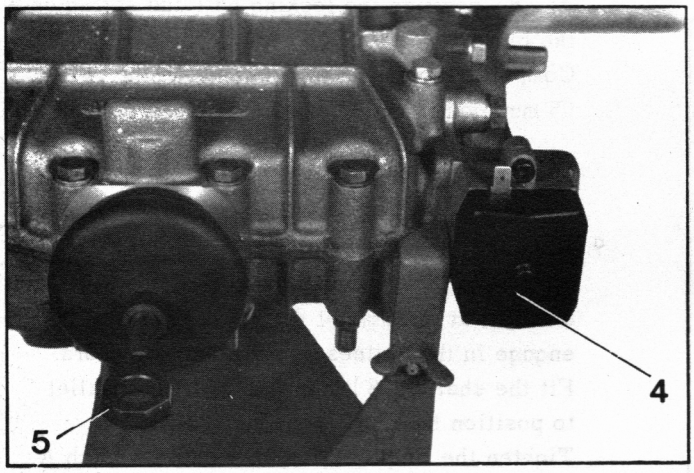

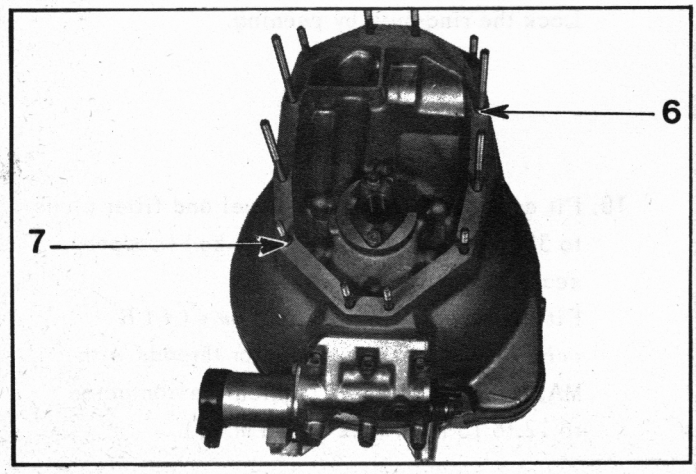

13. Fit the converter housing on the converter :

NOTE : The method of assembly given below is the best way of ensuring that the converter is properly fitted.

a) Check that the two locating dowels (6) and (7) are present.

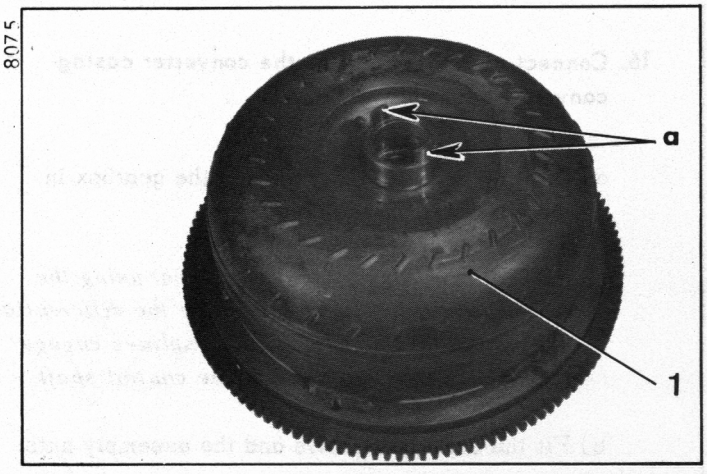

8075

b) Place the converter (1) flat on the bench. Engage the casing (2) on the converter (Turn the converter so that the drive pins « a » engage in the corresponding notches of the pump gear.

14. Fit the control shaft :

Check that the seals (3) and (4) and the circlip (5) are present.

Engage the control shaft (7) in the rotor sleeve (8) and in the converter splines.

Fit the spring (6) in its housing at « b ».

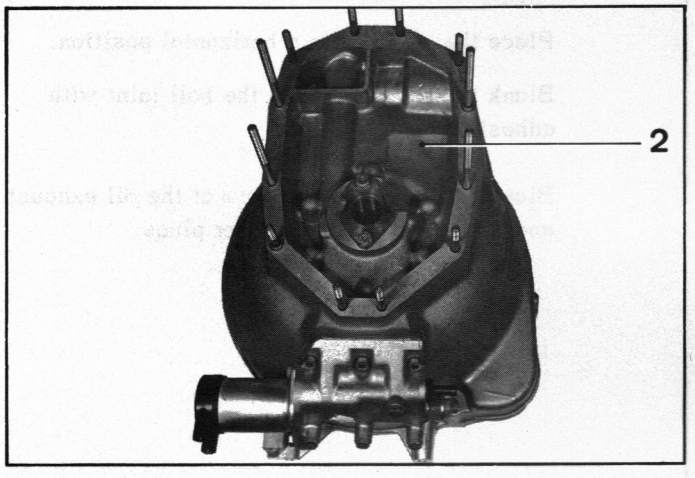

9645

15. Fit the converter holding bracket :

Slide the assembly of converter and casing towards the edge of the bench.

Fit the converter holding bracket 3186-T with the aid of two bolts (diameter 7 mm, pitch 1 mm).

IMPORTANT : *The use of bracket 3186-T is essential : it prevents the dislocation of the converter which would block the engine-gearbox assembly and damage the driving pins « a ».*

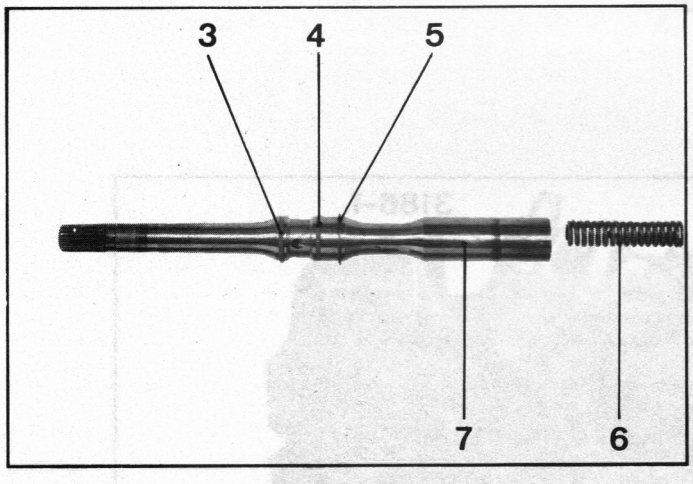

8282

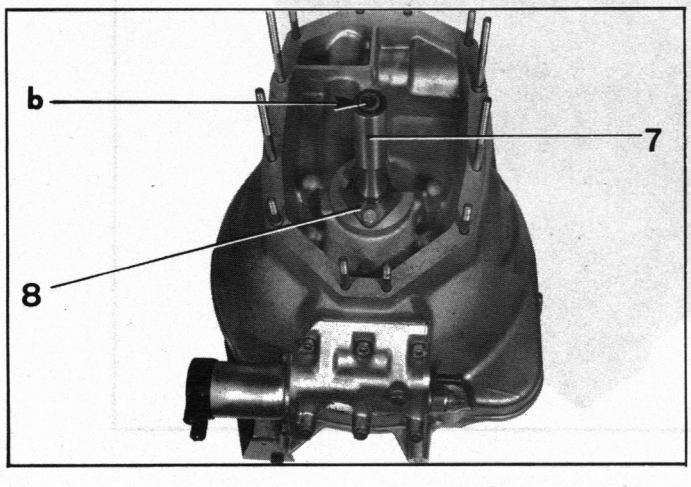

9650

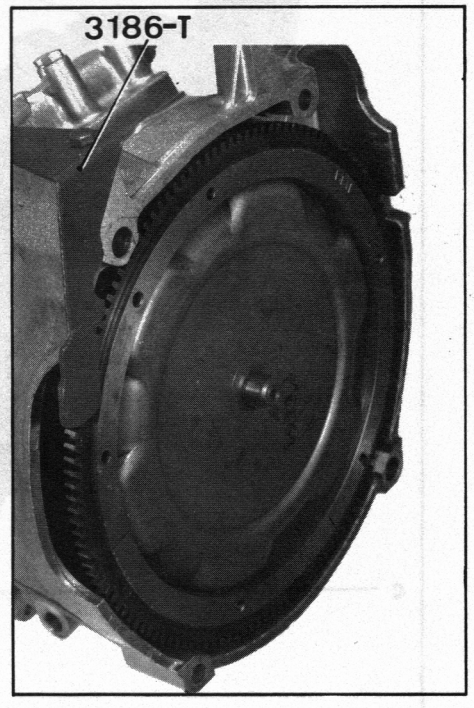

9652

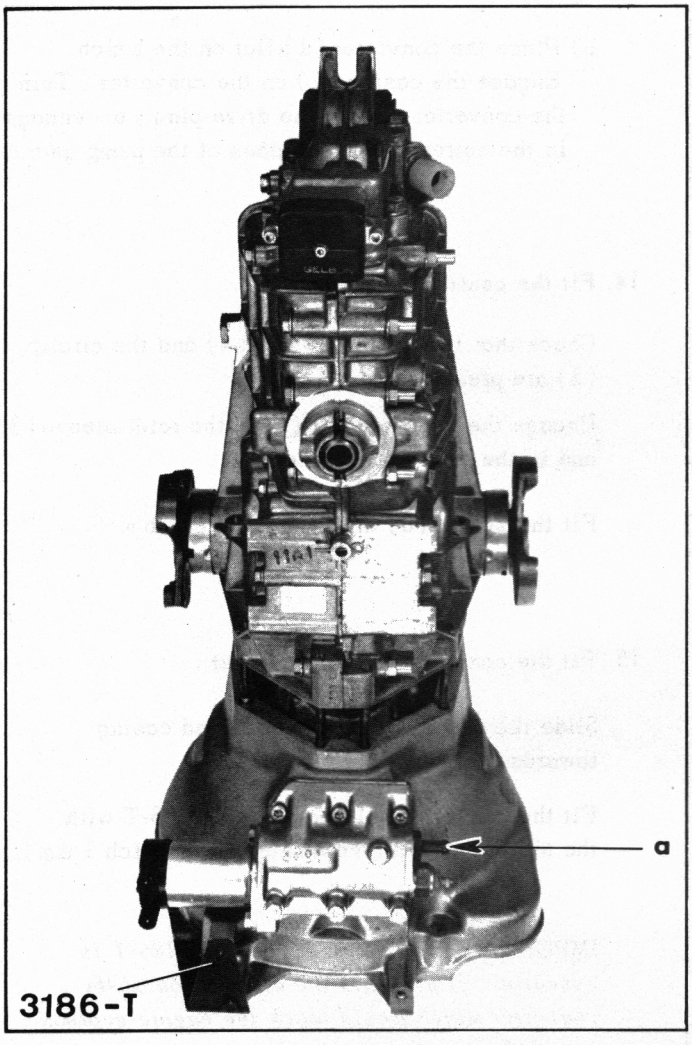

16. Connect up the gearbox to the converter casing-converter assembly :

a) Offer up and vertically engage the gearbox in the converter casing studs.

NOTE : *If necessary, engage a gear using the temporarily-fitted lever and rotate the differential shafts so that the primary shaft splines engage in the corresponding ones of the control shaft.*

b) Fit the contact washers and the assembly nuts.

Tighten them to 14 to 15 mΛN (1.4 to 1.5 m.kg)

Place the gearbox in a horizontal position.

Blank the orifice « b » of the ball joint with adhesive paper.

Blank orifices « a » and « c » of the oil exhaust and intake piping with rubber plugs.

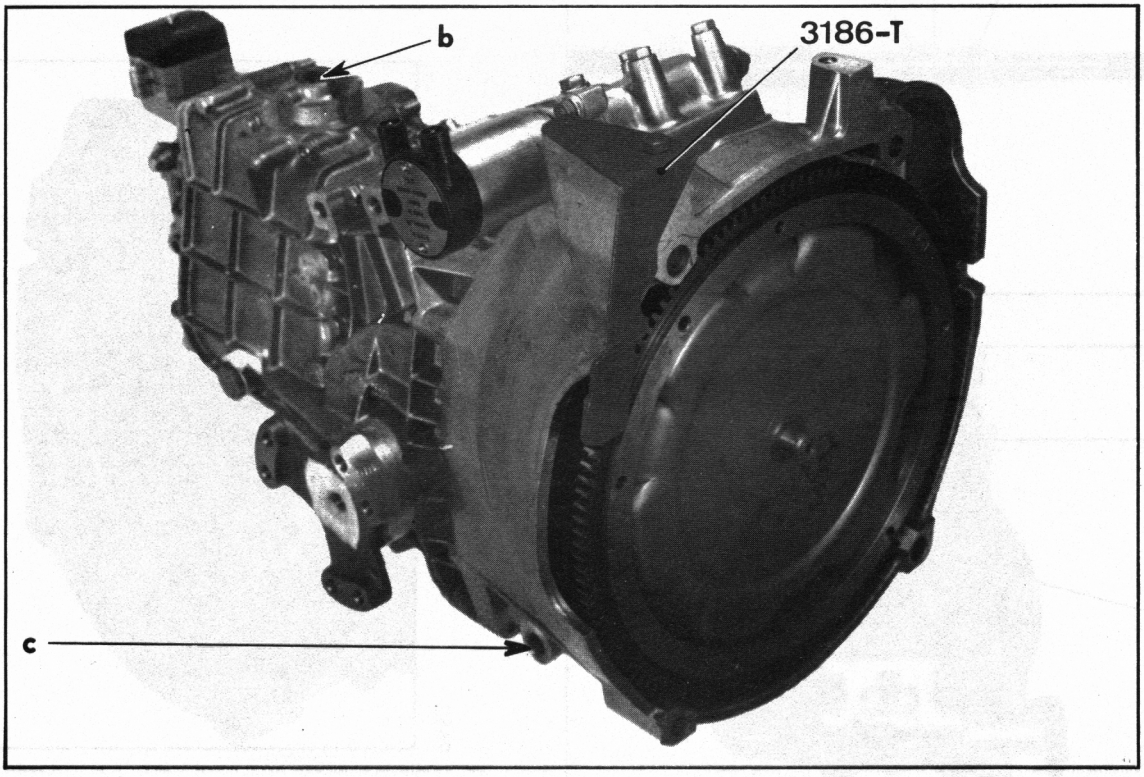

LIST OF SPECIAL TOOLS MENTIONED IN THE SECOND SECTION OF MANUAL N° 810-2

DESCRIPTION	NUMBER Repairs - Methods	REFERENCE of Tool on Sale
(2) ENGINE		
Spanner for cylinder head tightening (for nuts 12 mm across flats)		4006-T.D
Spanner for cylinder head tightening (for nuts 13 mm across flats)		4006-T.E
Valve grinder		1615-T
Valve spring compressor		1652-T or 1652-T bis
Extractor for crankshaft centring bush (equipped with a 12 mm diameter end piece)		1671-T
Spanner for removing filter cartridge		1683-T
Tool for fitting front crankshaft seal		1694-T
Tool for fitting spark generator seal		1695-T
Tool for fitting rear crankshaft seal		1696-T
Tool for fitting camshaft seal		1697-T
Cylinder head stud extractor		2410-T
Stand for engine on work-bench		2508-T
Piston ring fitting fixture *(Engine 1015 cc)*		3010-T
Piston ring fitting fixture *(Engine 1220 cc)*		4007-T
Mandrel for fitting crankshaft centring bush		3052-T bis
Special spanner for slackening and tightening camshaft pulleys	MR. 630-11/26	
Extractor for small end bush	MR. 630-23/9	
Extractor for rocker arm shaft	MR. 630-25/8	
Mandrel for centring clutch disc	MR. 630-31/85	
Mandrel for removing and fitting gudgeon pins		1699-T
Support bracket for holding cylinder head in a vice	MR. 630-43/31	
Shim for fitting oil pump		4001-T
Tool for crimping the by-pass valve	MR. 630-62/14	
Tool for holding flywheel		3064-T.E
(3) (4) CLUTCH - GEARBOX		
Stand for gearbox on work-bench	MR. 630-43/29	
Mandrel for centring converter oil pump		1689-T
Set of gauges for gearbox adjustment		3184-T
Extractor for removing differential taper bearings (used with pad 3184-T.H)		2400-T
Dial gauge		2437-T
Tool for holding in position torque converter on gearbox		3186-T
Circlip pliers		3253-T
Assembly for adjusting and checking torque converter		3112-T
This assembly consists of : - two shims for setting solenoid valve mechanism (max. diameter = 1.5 mm, min. diameter = 1.4 mm) - two unions for checking oil pressure		
Pad for removal of differential tapered bearings		3184-T.H

LIST OF SPECIAL TOOLS MENTIONED IN THE SECOND SECTION OF MANUAL N° 810-2

DESCRIPTION	NUMBER Repairs - Methods	REFERENCE of Tool on Sale
(7) (8) FRONT AND REAR AXLES		
Front hub extractor		1893-T
End-piece for extracting rear suspension arm bearing (to be used with 1671-T)		2070-T
Mandrel and two bushes for fitting rear suspension arm bearings		2071-T
Castellated socket (diameter = 75 mm) for two-slot nuts of front or rear hub bearings (used with 3321-T)		3304-T
Socket for front hub bearing nut		3320-T
Assembly for fitting and removing front or rear hub nut		3321-T
Mandrel for fitting front and rear hub bearings	MR. 630-31/96	
Lever for holding front or rear hub	MR. 630-64/40	
(9) SUSPENSION		
Union for bleeding height corrector		2218-T
Support for suspension cylinder		2293-T
Hydraulic test bench		3654-T
Tubular spanner for locking screw of height corrector jets	MR. 630-12/36	
Height corrector support	MR. 630-43/16	

MR 630_11/26

MATERIAL : Flat iron 50 × 10

Drawn, diameter = 22

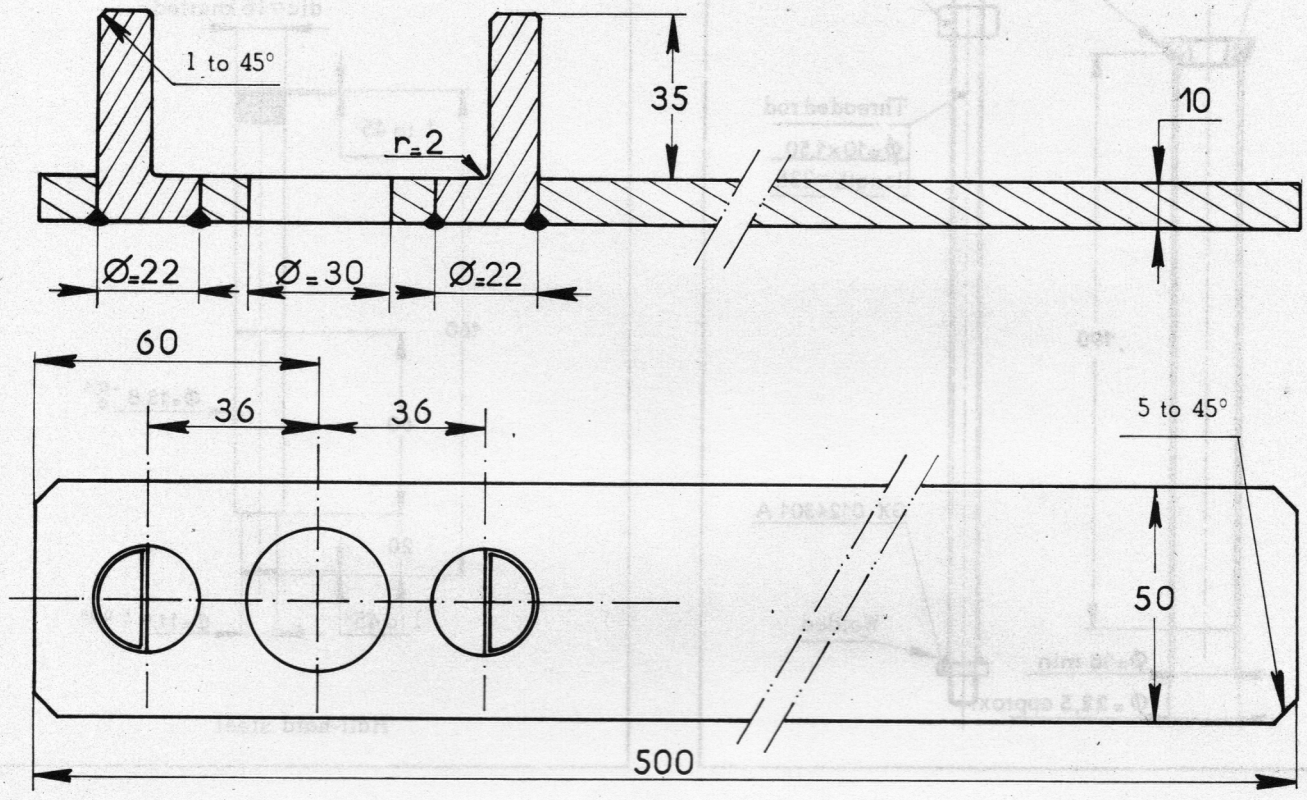

MR - 630 - 23/9

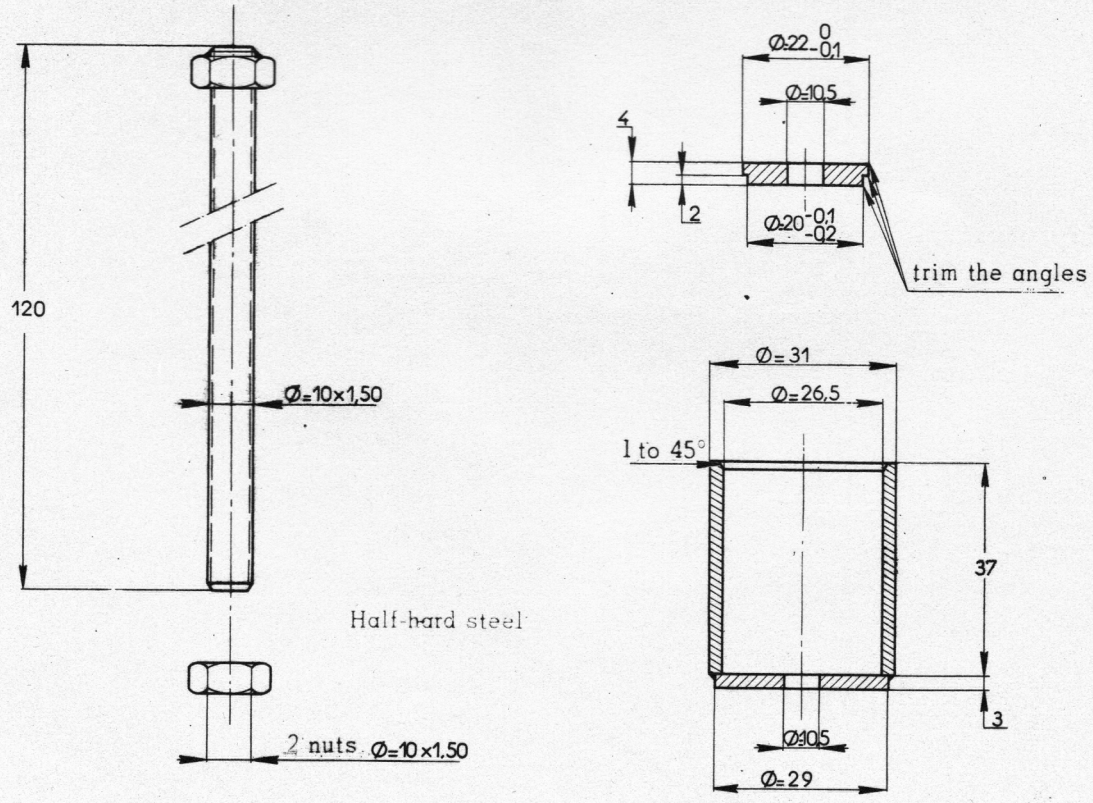

MR 630_25/8

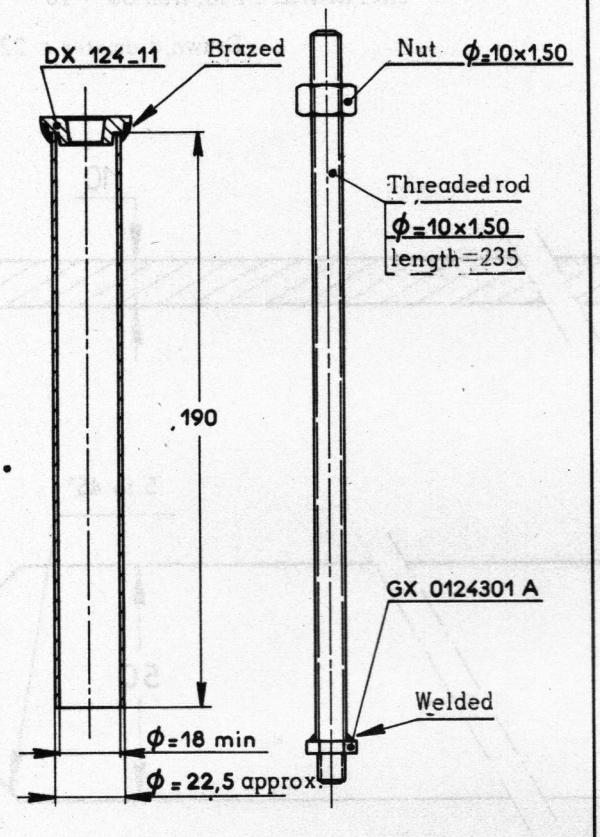

MR 630_31/85

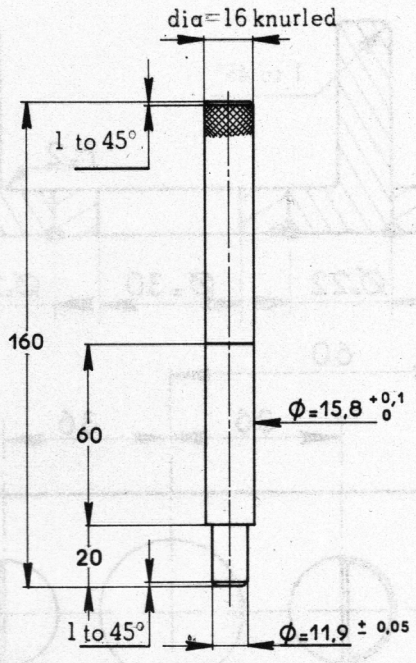

Half-hard steel

MR 630.62/14

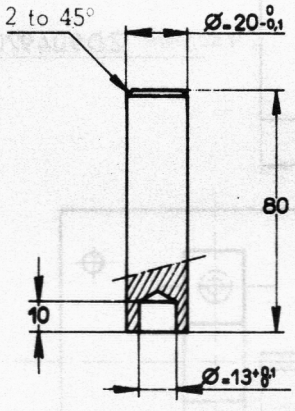

MATERIAL : Hard steel

MR630-43/31

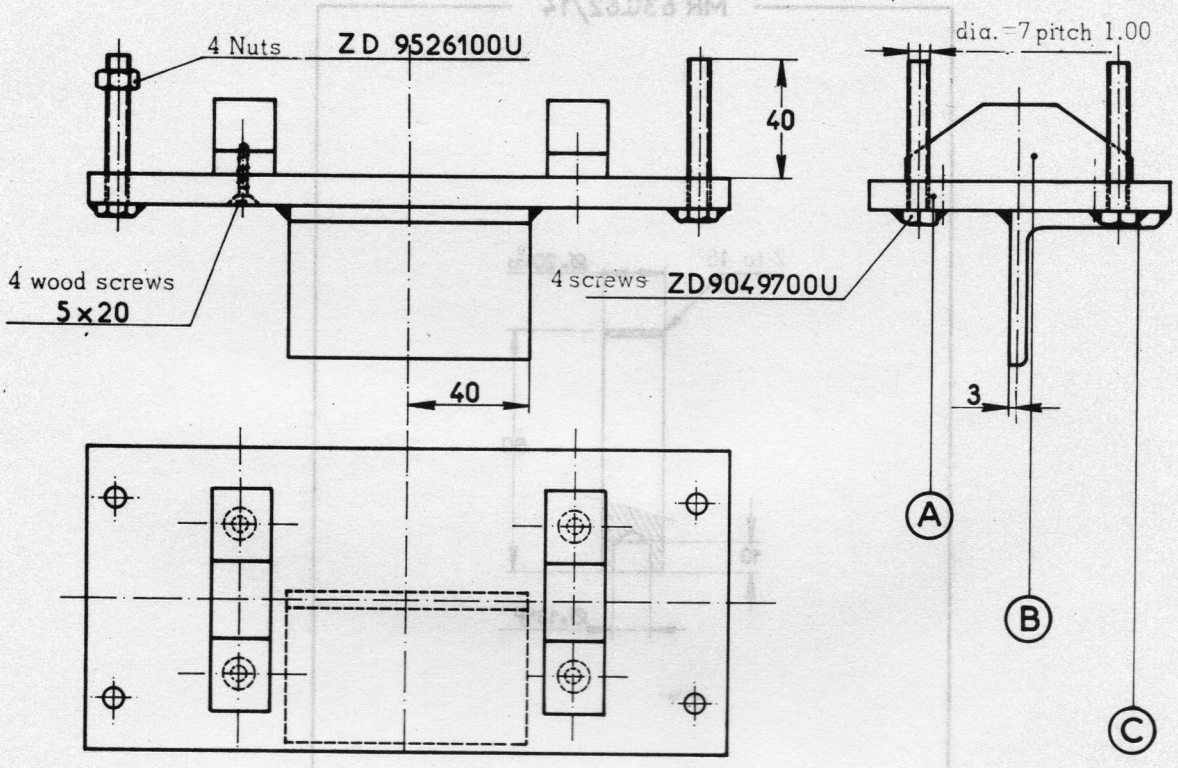

Rep.	Qty.	Mat.	Sizing	Sketch
A	1	Sheet metal thick. 10	100×213,5	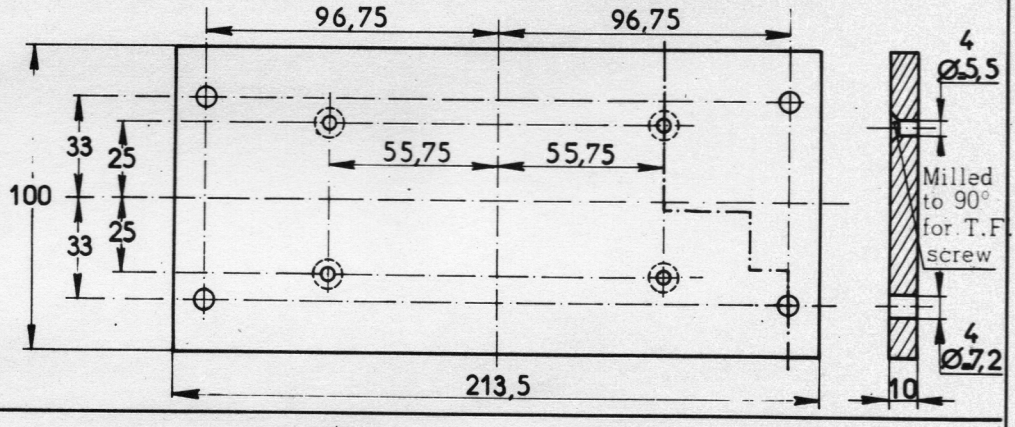
B	2	Hard wood	74×35×20	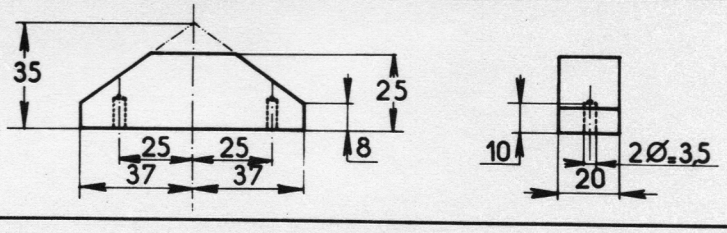
C	1	Angle bar 50×50	L = 80	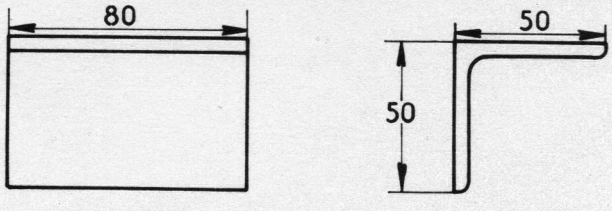

MR 630_43/29

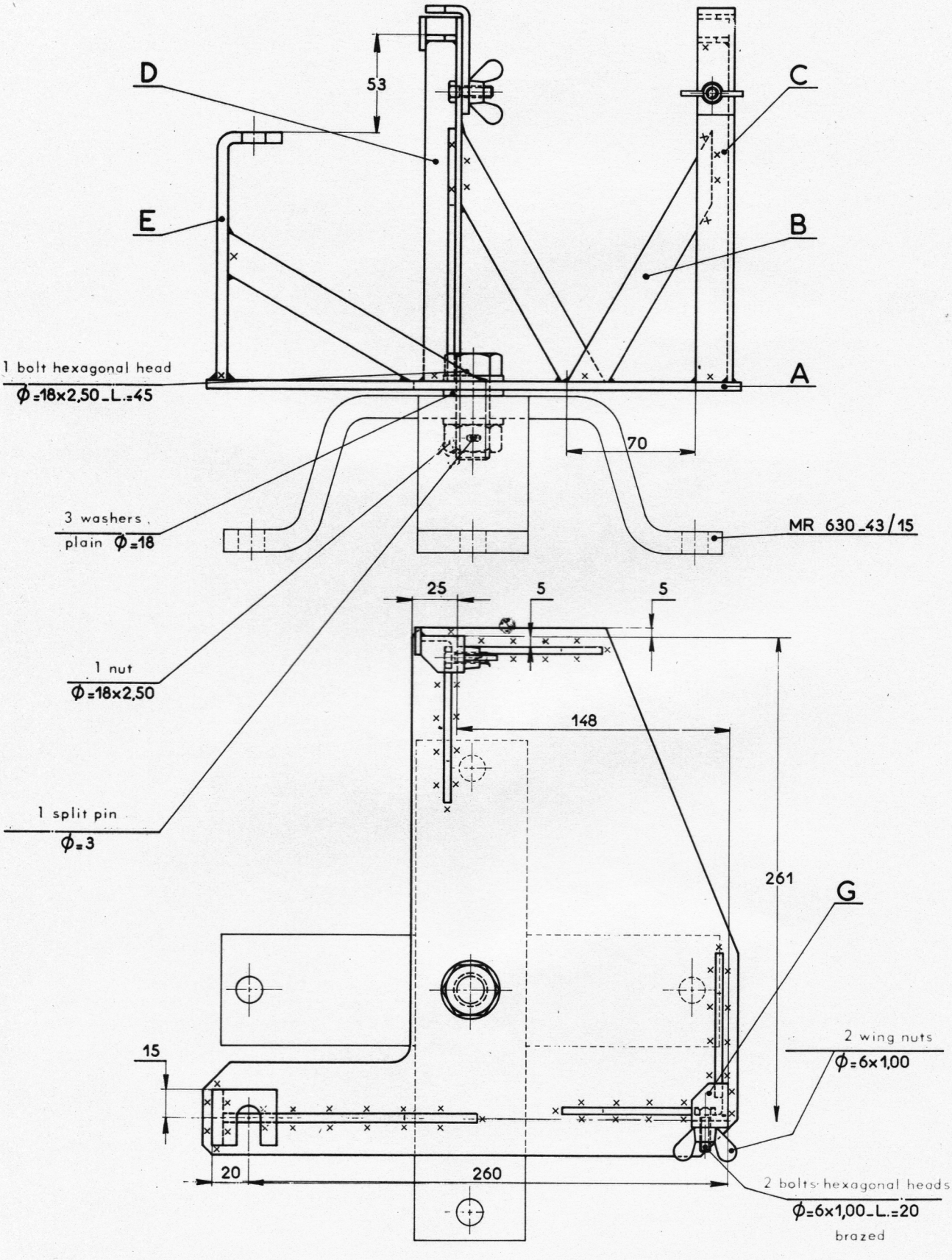
D
53
C
E
B
1 bolt hexagonal head
ϕ=18x2,50_L.=45
A
70
3 washers
plain ϕ=18
MR 630_43/15
25
5
5
1 nut
ϕ=18x2,50
148
1 split pin
ϕ=3
261
G
15
2 wing nuts
ϕ=6x1,00
20
260
2 bolts hexagonal heads
ϕ=6x1,00_L.=20
brazed

MR 630_31/96

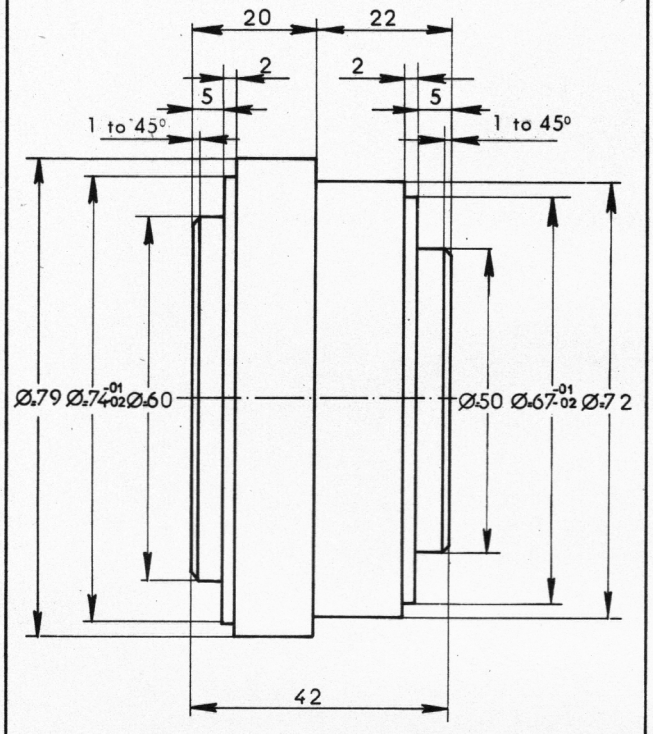

MATERIAL : Half-hard steel

MR.630_64/40

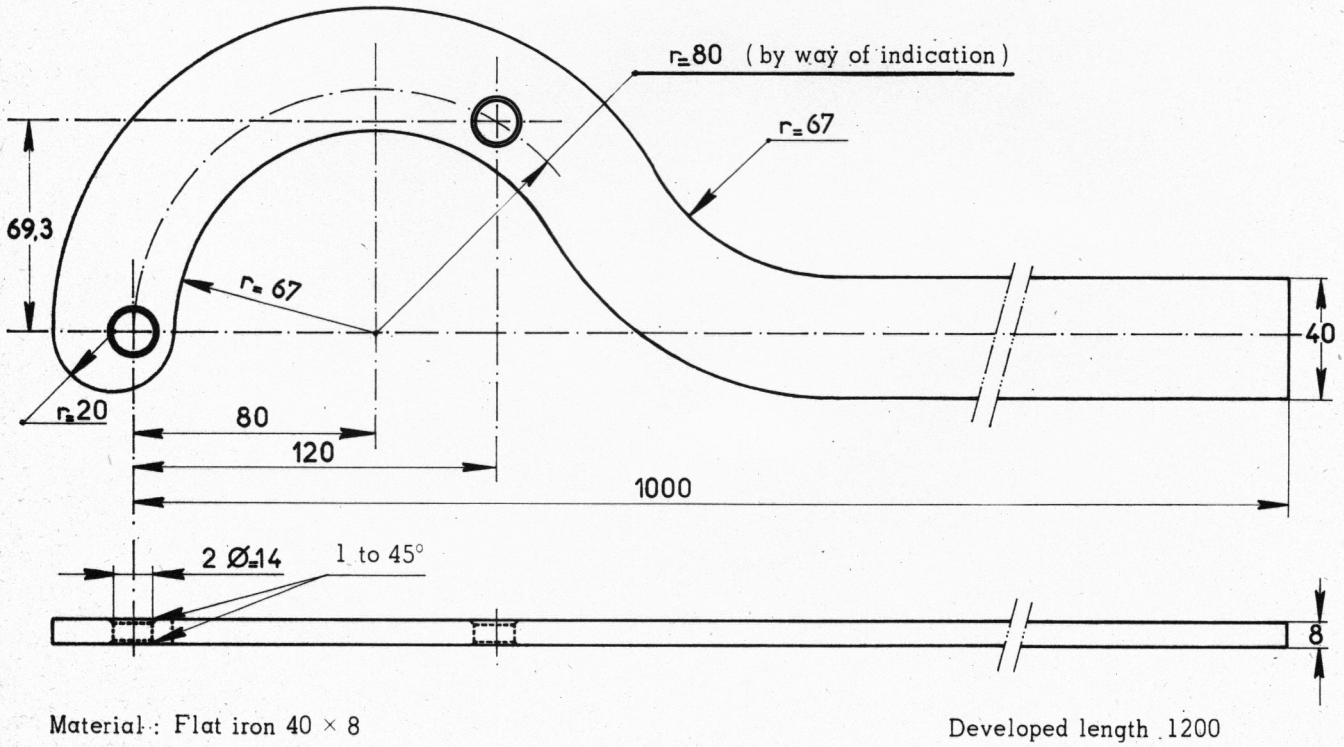

Material : Flat iron 40 × 8

Developed length 1200

MR 630_12/36
ex. MR 1376_50

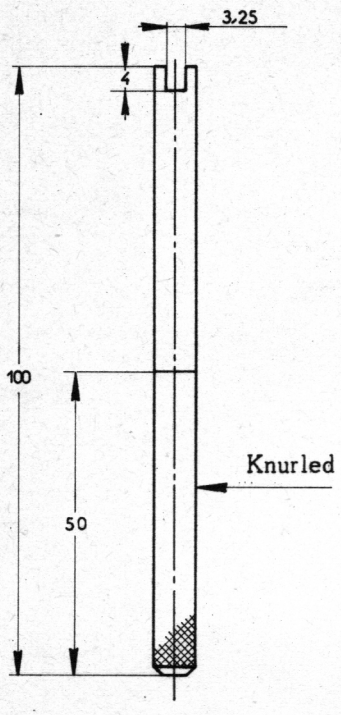

drawn dia = 7

MR 630-43/16
ex:MR 3053-260

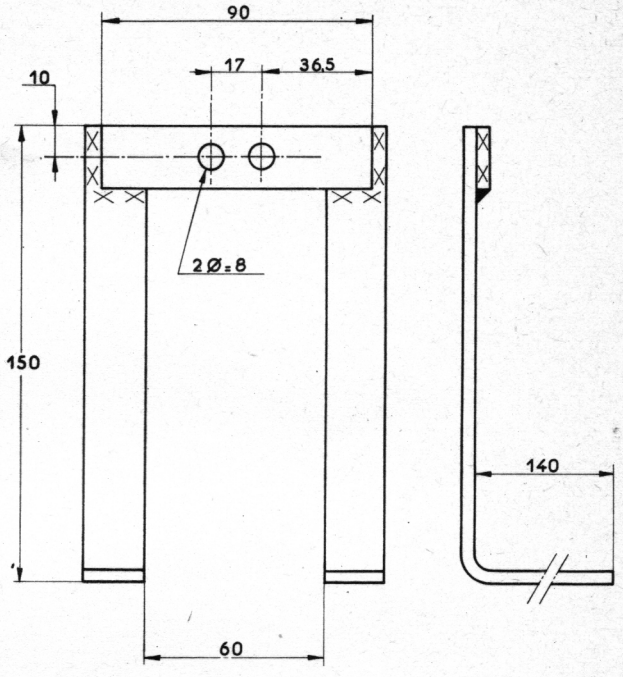

Material : Flat iron of 20 × 4